NOISE REDUCTION TECHNIQUES IN ELECTRONIC SYSTEMS

SECOND EDITION

Henry W. Ott
Distinguished Member of Technical Staff
AT&T Bell Laboratories

WILEY

A WILEY-INTERSCIENCE PUBLICATION
JOHN WILEY & SONS
New York • Chichester • Brisbane • Toronto • Singapore

Published by John Wiley & Sons, Inc.

Library of Congress Cataloging in Publication Data:

Ott, Henry W., 1936–
Noise reduction techniques in electronic systems/Henry W. Ott. – – 2nd ed.
p. cm.
"A Wiley-Interscience publication."
Includes bibliographies.
ISBN 0-471-85068-3
1. Electronic circuits—Noise. I. Title.
TK7867.5.087 1988 87-22483
621.3815'3—dc19

Printed in the United States of America

30 29 28 27 26 25 24

Everything should be made as simple as possible,
but no simpler.

Albert Einstein, 1879–1955

PREFACE

Much has occurred to affect the field of electromagnetic compatibility (EMC) in the 11 years since the first edition of this book was published. The two most important developments are the proliferation of digital electronics in the consumer marketplace and the establishment of rules on emission control from digital systems by the Federal Communications Commission (FCC). As a result interest in the subject of EMC has increased dramatically.

The first edition covered basic theory and emphasized reducing the susceptibility of electronic systems. There is now a need for information on controlling the emission from electronic systems, especially digital systems, and on low-cost techniques for providing EMC for consumer products sold in a competitive market. In addition there is increased concern about the susceptibility of electronic systems to electrostatic discharge. This edition was written to address these issues.

Virtually all the material contained in the first edition is still applicable and has been retained. Three new chapters have been added on the subjects of noise and radiation from digital electronics and electrostatic discharge.

Chapter 1 was rewritten and now includes material on the FCC regulations. Chapters 2 to 7 were updated and contain new material; Chapters 8 and 9 are unchanged; Chapters 10, 11, and 12 are new. Chapter 10 covers digital circuit noise and layout, Chapter 11 is on digital circuit radiation, and Chapter 12 deals with electrostatic discharge. In addition a new appendix has been included on FCC EMC test procedures (Appendix F).

I would like to express my gratitude and appreciation to all those who took the time to comment on the first edition of the book, and to those who encouraged me to write this second edition. In particular, I would like to thank Scott Roleson, Bob German, and Dr. Clayton Paul for the many fruitful discussions we had on the subject of EMC.

I owe a special debt of appreciation to Eva Carter for her superb editing of the manuscript. A special thanks also goes to Dan Johnson who worked out all the problems in the first edition and pointed out errors. Finally, I would like to thank all my colleagues who took the time to review this manuscript and make useful comments and suggestions.

HENRY W. OTT

Livingston, New Jersey
July 1987

PREFACE TO FIRST EDITION

This book covers the practical aspects of noise suppression and control in electronic circuits. It is intended primarily for the practicing engineer who is involved in the design of electronic equipment or systems, and also as a text for teaching the practical aspects of noise suppression. The concepts of noise reduction presented in the book can be applied to circuits operating from audio frequencies through VHF. More emphasis is placed on low- to mid-frequency noise problems, however, since these are the least documented in existing literature.

Some of the most difficult and frustrating problems faced by design engineers concern elimination of noise from their circuits or systems. Most engineers are not well equipped to handle noise problems, since the subject is not normally taught in engineering schools, and what literature is available is widely scattered among many different journals.

Solutions to noise problems are usually found by trial and error with little or no understanding of the mechanisms involved. Such efforts are very time consuming and the solutions may prove unsatisfactory if the equipment is moved to a new environment. This situation is unfortunate, since most of the principles involved are simple and can be explained by elementary physics.

This text began as a set of lecture notes for an out-of-hours course given at Bell Laboratories and later presented as part of the in-hours continuing education program at the laboratories. The approach used in the text is design oriented, with the amount and complexity of mathematics kept to a minimum. In some cases, models representing physical phenomena have been simplified to provide more useful results. By making realistic simplifying assumptions, results having clear physical meaning are obtained.

The organization of the material is as follows. Chapter 1 is an introduction to the subject of noise reduction. Chapters 2 and 3 cover the two primary means of noise control: shielding and grounding, respectively. Chapter 4 covers other noise reduction techniques such as balancing, decoupling, and filtering. Chapter 5, on passive components, covers the characteristics that affect the components' noise performance and their use in noise reduction circuitry. Chapter 6 provides a detailed analysis of the shielding effectiveness of metallic sheets. Chapter 7 covers relays and switches and discusses methods of reducing noise generated by these devices. Chapter 8 covers intrinsic noise sources that result in a theoretical

minimum level of noise present in a circuit. Chapter 9 discusses noise in transistors and integrated circuits.

At the end of each chapter is a summary of the most important points discussed. For those desiring additional information a bibliography is also included. In addition, Appendix A discusses the decibel and its use in noise measurements on voice-frequency analog communications systems. Appendix B (presented in the form of a check list) is an overall summary of the more commonly used noise reduction techniques. Review problems for each chapter can be found in Appendix D with answers in Appendix E.

I wish to express my gratitude to Mr. S. D. Williams, Jr., who collaborated with me on an original set of notes for a noise-control seminar. That work provided the seed from which this book grew. I am also grateful to the many students whose enthusiasm provided the incentive to continue this work. Special thanks to Mr. F. P. Sullivan and Miss A. L. Wasser for their technical editing of the manuscript, and to Mr. L. E. Morris and Mr. D. N. Heirman for their many helpful suggestions. In addition I would like to thank all my colleagues who reviewed the manuscript, for their useful comments. Finally, I would like to express my gratitude to Bell Laboratories for their cooperation and support.

HENRY W. OTT

Whippany, New Jersey
July 1975

CONTENTS

SYMBOLS

A	Area
A	Voltage gain
A	Absorption loss (dB)
B	Magnetic flux density
B	Multiple reflection correction factor (dB)
B	Noise bandwidth
BW	Bandwidth
C	Capacitance
C_n	Fourier series coefficient
C_T	Distributed capacitance of transmission line
c	Center to center distance
D	Distance between conductors
d	Diameter
d	Duty cycle
E	Electric field
e	Base of natural logarithm (2.7183)
F	Noise factor
f	Frequency
f_c	Shield cutoff frequency
f_0	3-dB bandwidth
f_r	Resonant frequency
f_α	Alpha cutoff frequency
G	Available power gain
G_s	Source admittance
g_{fs}	Forward transconductance
g_{11}	Input admittance
H	Magnetic field
h	Height of conductor above ground plane
h	Spacing of flat conductors
I	Current
I_A	Minimum arcing current

I_{dc}	Direct current
I_f	$1/f$-noise current
I_G	Ground current
I_{gss}	Gate leakage current
I_L	Load current
I_N	Arbitrary noise current
I_d	Differential mode current
I_c	Common-mode current
I_n	Current in nth harmonic
I_n	Equivalent input noise current
I_0	Current at time $t = 0$
I_s	Source current
I_S	Shield current
I_{sh}	Shot noise current
I_t	Thermal noise current
i	Instantaneous current
j	Unit vector along imaginary axis
K	Arbitrary integer
K	Constant
k	Boltzmann's constant
k	Coefficient of magnetic coupling
L	Inductance
L_c	Series inductance of capacitor
L_S	Shield inductance
L_T	Distributed inductance of transmission line
l	Length
M	Mutual inductance
m	Integer
N	Network function
n	Integer
NF	Noise figure
P	Power
P_{no}	Noise power output
Q	Charge
Q	Quality factor
q	Charge on electron
R	Resistance
R	Reflection loss (dB)
R_{ac}	ac resistance

R_C	Conductor resistance
R_c	Series resistance of capacitor
R_{dc}	dc resistance
R_F	Resistance of fuse
R_G	Ground resistance
R_L	Load resistance
R_S	Shield resistance
R_s	Source resistance
R_{so}	Source resistance for minimum noise factor
R_T	Distributed resistance of transmission line
r	Radius
r'_b	Base resistance in T-equivalent transistor model
r_c	Collector resistance in T-equivalent transistor model
r_e	Emitter resistance in T-equivalent transistor model
S	Shielding effectiveness (dB)
S/N	Signal-to-noise power ratio
SNI	Signal-to-noise improvement factor
T	Period
T	Temperature
T_e	Equivalent input noise temperature
T_0	Standard reference temperature
t	Time
t	Thickness
t_r	Pulse rise time
V	Voltage
V_A	Minimum arcing voltage
V_B	Glow discharge breakdown voltage
V_C	Common-mode noise voltage
V_c	Contact voltage
V_{cc}	Supply voltage
V_{dc}	dc voltage
V_G	Ground voltage
V_G	Glow discharge sustaining voltage
V_L	Load voltage
V_M	Differential (metallic) noise voltage
V_N	Arbitrary noise voltage
V_n	Equivalent input noise voltage
V_{nd}	Equivalent input device noise voltage
V_{no}	Output noise voltage

V_{nt}	Total equivalent input noise voltage
V_s	Source voltage
V_S	Shield voltage
V_t	Thermal noise voltage
w	Width of conductor
Z	Impedance
Z_c	Collector impedance
Z_e	Emitter impedance
Z_L	Load impedance
Z_o	Characteristic impedance of transmission line
Z_0	Characteristic impedance of medium
Z_s	Shield impedance
Z_T	Transfer impedance
Z_w	Wave impedance
α	Common base current gain
β	Common emitter current gain
γ	Correlation coefficient
δ	Skin depth
ϵ	Dielectric constant
ϵ_r	Relative dielectric constant
ζ	Damping factor
η	Shield factor
θ	Angle
λ	Wavelength
μ	Permeability
μ_r	Relative permeability
π	3.1416
ρ	Resistivity
ρ_r	Relative resistivity
σ	Conductivity
σ_r	Relative conductivity
τ	Decay time
ϕ	Magnetic flux
ω	Radian frequency ($2\pi f$)
ω_c	$2\pi f_c$

NOISE REDUCTION TECHNIQUES IN ELECTRONIC SYSTEMS

SECOND EDITION

1 INTRODUCTION

The widespread use of electronic circuits for communication, computation, automation, and other purposes makes it necessary for diverse circuits to operate in close proximity. All too often these circuits affect each other adversely. Electromagnetic interference (EMI) has become a major problem for circuit designers, and it is likely to become more severe in the future. The large number of electronic devices in common use is partly responsible for this trend. In addition the use of integrated circuits and large-scale integration has reduced the size of electronic equipment. As circuitry has become smaller and more sophisticated, more circuits are being crowded into less space, thus increasing the probability of interference.

Today's equipment designers need to do more than just make their systems operate under ideal conditions in the laboratory. Besides that obvious task, they must also make sure the equipment will actually work in the "real world," with other equipment nearby. This means that the equipment should not be affected by external noise sources, and should not itself be a source of noise to the environment. Electromagnetic compatibility (EMC) should be a major design objective.

In Fig. 1-1 the block diagram of a radio receiver is used as an example to depict the various types of interference that can occur in equipment. The wiring between the various stages conducts noise, and some stages radiate noise. In addition ground currents from the various stages flow through a common ground impedence and produce a noise voltage on the ground bus. Electric and magnetic field coupling between signals in various conductors is also shown. These noise problems are examples of intraequipment interference that must be solved before the radio will operate in the laboratory. When the radio is installed in the "real world" it becomes exposed to additional external noise sources, such as shown in Fig. 1-2. Noise currents are conducted into the receiver on the ac power line, and the radio receiver is exposed to electromagnetic radiation from various sources. In this case the noise sources are not under the designer's control. However, the unit must still be designed to operate in this environment.

Figure 1-3 depicts the other side of the noise problem. The radio can be a source of noise that may interfere with other equipment. Parts of the circuit radiate noise directly, and the power cable conducts noise to other circuits. Noise current flowing in the power lead causes the lead to radiate additional noise. Designing equipment to minimize noise generation is equally as important as designing equipment that is not susceptible to interference.

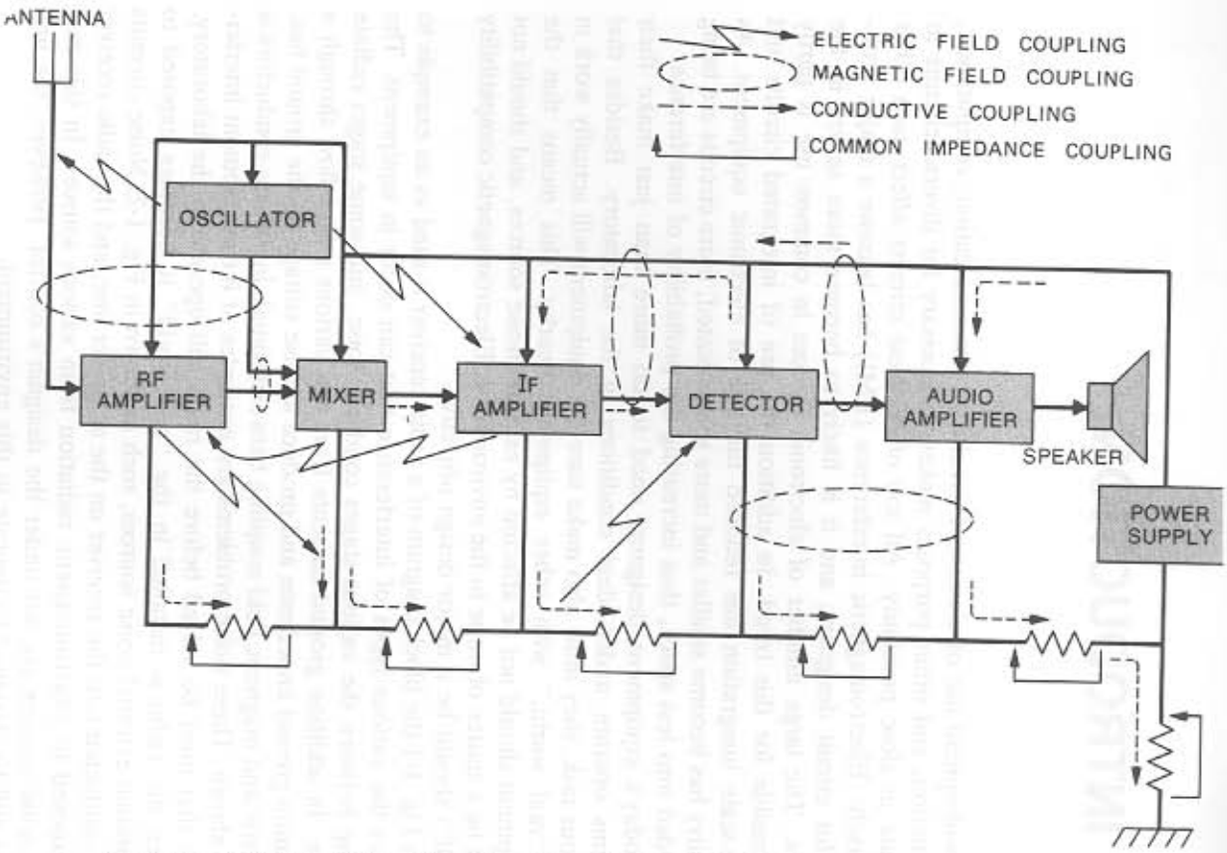

Figure 1-1. *Within equipment, such as this radio receiver, individual circuit elements can interfere with one another in several ways.*

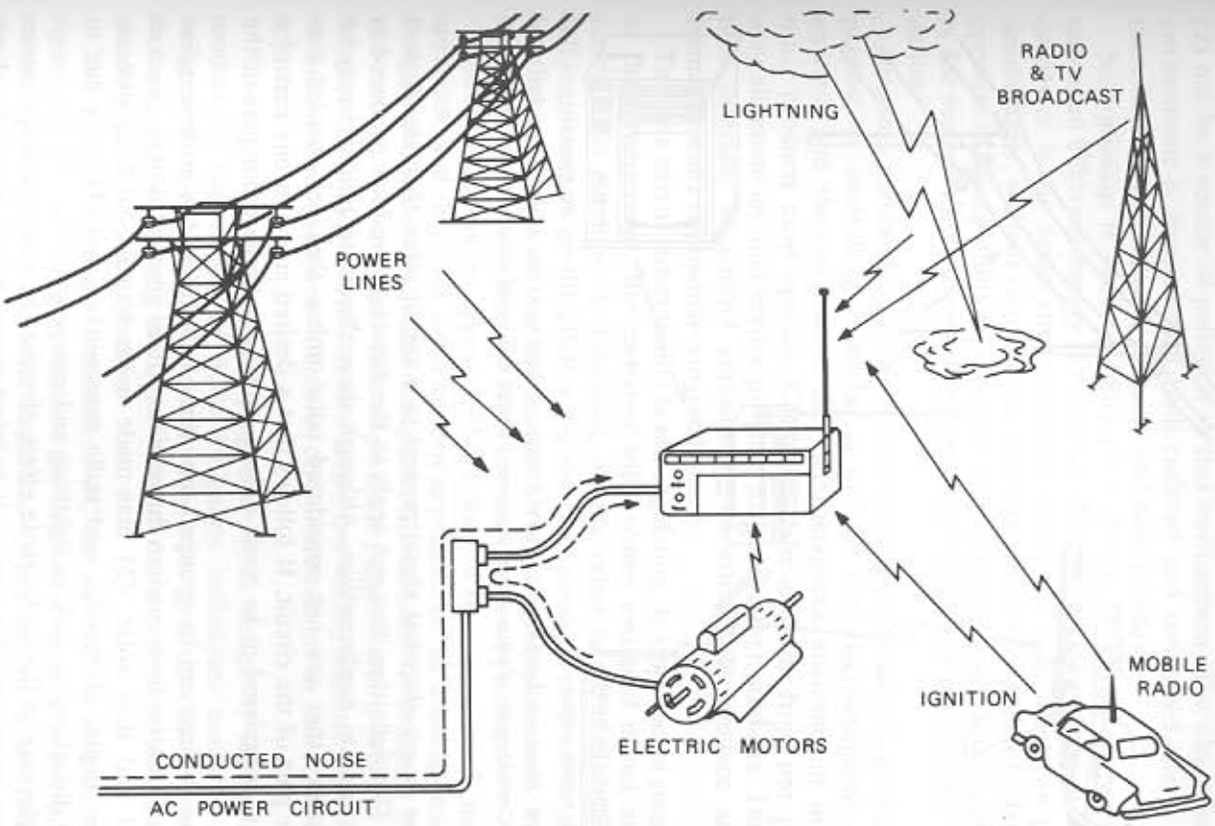

Figure 1-2. *Outside of the laboratory, electronic equipment such as this radio is subjected to a variety of electromagnetic noise sources. Careful design is required to guarantee compatibility with the environment.*

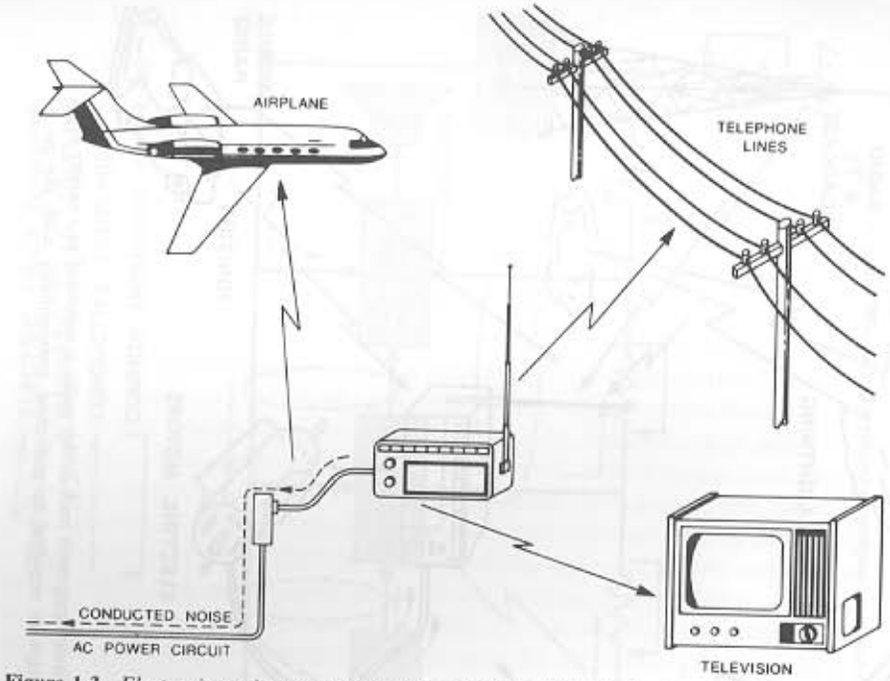

Figure 1-3. *Electronic equipment such as this radio can emit noise that may interfere with other circuits. Consideration of noise during equipment design can avoid these emissions.*

Noise is any electrical signal present in a circuit other than the desired signal. This definition does not apply to the distortion products produced in a circuit due to nonlinearities. Although these distortion products may be undesirable, they are not considered noise unless they get coupled into another part of the circuit. It follows that a desired signal in one part of a circuit is considered to be noise only if coupled to some other part of the circuit.

Noise sources can be grouped into three categories: (1) intrinsic noise sources that arise from random fluctuations within physical systems, such as thermal and shot noise, (2) man-made noise sources, such as motors, switches, digital electronics, and radio transmitters, and (3) noise due to natural disturbances, such as lightning and sunspots.

Interference is the undesirable effect of noise. If a noise voltage causes improper operation of a circuit, it is interference. Noise cannot be eliminated but only reduced in magnitude, until it no longer causes interference.

DESIGNING FOR ELECTROMAGNETIC COMPATIBILITY

Electromagnetic compatibility (EMC) is the ability of an electronic system to (1) function properly in its intended electromagnetic environment, and

(2) not be a source of pollution to that environment. The electromagnetic environment is composed of both radiated and conducted energy. EMC therefore has two aspects, emission and susceptibility.

Susceptibility is the capability of a device or circuit to respond to unwanted electrical energy (i.e., noise). The susceptibility level of a circuit or device is the noise environment in which the equipment can operate satisfactorily, without degradation, and with a defined margin of safety. The opposite of susceptibility is immunity. One difficulty in determining immunity (or susceptibility) levels is defining what constitutes performance degradation.

Emission pertains to the interference-causing potential of a product. The purpose of controlling emissions is to limit the electromagnetic energy emitted, and thereby control the electromagnetic environment in which other products must operate. Controlling the emission from one product may eliminate an interference problem for many other products. Therefore it is desirable to control emission in an attempt to produce an electromagnetically compatible environment.

To some extent susceptibility is self-regulating. If a product is susceptible to the environment, the customer will become aware of it and may not continue to purchase it. Emission, on the other hand, tends not to be self-regulating. A product that is the source of emission may not be affected by that emission. As a result various regulatory bodies have imposed standards to control emissions from certain classes of products.

EMC design can be approached in either of two ways: one is the *crisis approach*, and the other is the *systems approach*. In the crisis approach the designer proceeds with a total disregard of EMC until the design is finished, and testing or—worse yet—field experience suggests that a problem exists. Solutions, implemented at this late stage, are usually expensive and consist of undesirable "add-ons." This is often referred to as the "Band-Aid" approach.

As equipment development progresses from design to testing and to production, the variety of noise mitigation techniques available to the designer decreases steadily. Concurrently, cost goes up. These trends are shown in Fig. 1-4. Early solutions to interference problems, therefore, are usually best and least expensive.

The systems approach considers EMC throughout the design; the designer anticipates EMC problems at the beginning of the process, finds the remaining problems in the breadboard and early prototype stages, and tests the final prototypes for EMC as thoroughly as possible. This way EMC becomes an integral part of both the electrical and mechanical design of the product. As a result EMC is designed into—and not added onto—the product, and this is a more cost-effective approach.

If noise suppression is considered for one stage or subsystem at a time when the equipment is being designed, the noise mitigation techniques are simple and straightforward. Experience has shown that when noise suppression is handled this way, the designer should be able to produce equipment

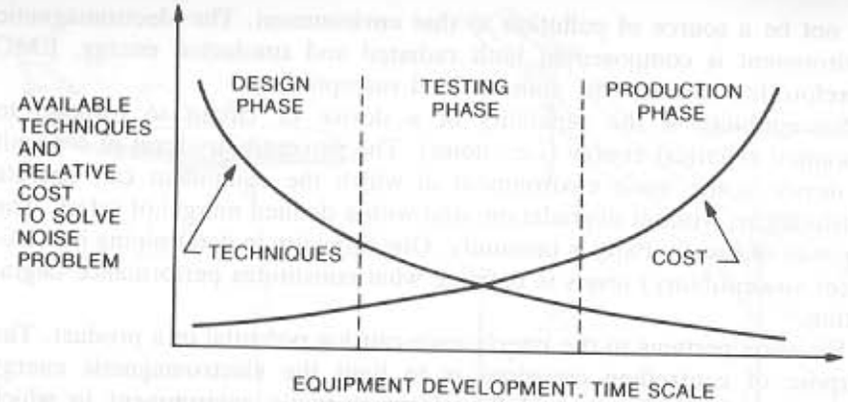

Figure 1-4. *As equipment development proceeds, the number of available noise-reduction techniques goes down. At the same time the cost of noise reduction goes up.*

with 90% or more of the potential noise problems eliminated prior to testing.

On the other hand, a system designed with complete disregard to noise suppression will almost always have noise problems when testing begins. Analysis at that time, to find which of the many possible noise path combinations are contributing to the problem, may not be simple or obvious. Solutions at this late stage usually involve the addition of extra components that are not integral parts of the circuit. Penalties paid include the added engineering cost and the cost of the mitigation components and their installation. There also may be size, weight, and power dissipation penalties.

EMC REGULATIONS

Some added insight into the problem of interference and the obligations of equipment designers can be gained from a review of some of the more important government and military EMC regulations and specifications.

FCC Regulations

In the United States the Federal Communications Commission (FCC) regulates the use of radio and wire communications. Part of its responsibility concerns the control of interference. Three sections of the FCC Rules and Regulations* have requirements that are applicable to nonlicensed electronic equipment. These are Part 15 (for radio-frequency devices), Part 18

*Code of Federal Regulations, Title 47.

(for industrial, scientific and medical equipment), and Part 68 (for equipment connected to the telephone network).

Part 15 of the FCC Rules and Regulations sets forth technical standards and operational requirements for radio-frequency devices. A radio-frequency device is any device that in its operation is capable of emitting, intentionally or unintentionally, radio-frequency energy by radiation, conduction, or some other means. Radio-frequency energy is defined by the FCC as any electromagnetic energy in the frequency range of 10 kHz to 3 GHz. The standards have a twofold purpose: to provide for the operation of low power transmitters without a radio station license and to control interference to authorized radio communications services that may be caused by equipment that emits radio-frequency energy or noise as a by-product of its operation. Digital electronics fall into the latter category.

Part 18 of the FCC Rules and Regulations sets forth technical standards and operational conditions for industrial, scientific, and medical equipment (ISM equipment). ISM equipment is defined as any device that uses radio waves for industrial, scientific, medical, or any other purpose (including the transfer of energy by radio) and that is neither used nor intended to be used for radio communications. Included are medical diathermy equipment, industrial heating equipment, RF welders, RF lighting devices, devices used to produce physical changes in matter, and other related noncommunications devices.

Part 68 of the FCC Rules and Regulations provides uniform standards for the protection of the telephone network from harm caused by the connection of terminal equipment (including PBX systems) and its wiring, and for the compatibility of hearing aids and telephones to ensure that persons with hearing aids have reasonable access to the telephone network. Harm to the telephone network includes electrical hazards to telephone company workers, damage to telephone company equipment, malfunction of telephone company billing equipment, and degradation of service to persons other than the user of the terminal equipment, his calling or called party.

FCC Part 15, Subpart J

The FCC rule of general interest is Part 15, Subpart J because it applies to almost all digital electronics. In September 1979 the FCC adopted regulations to control the interference potential of digital electronics (called computing devices by the FCC). These regulations, "Technical Standards for Computing Equipment" (Docket 20780), amended Part 15 of the FCC rules relating to restricted radiation devices, and they are now contained in Part 15, Subpart J of Title 47 of The Code of Federal Regulations. Under these rules, limits are placed on the maximum allowable radiated emission in the frequency range of 30 to 1000 MHz and on the maximum allowable conducted emission on the ac power line in the frequency range of 0.450 to 30 MHz.

These regulations were the result of increasing complaints to the FCC about interference to radio and television reception where digital electronics were identified as the source of the interference. In this ruling the FCC said

> Computers have been reported to cause interference to almost all radio services, particularly those services below 200 MHz, including police, aeronautical, and broadcast services. Several factors contributing to this include: (1) digital equipment has become more prolific throughout our society and are now being sold for use in the home; (2) technology has increased the speeds of computers to the point where the computer designer is now working with radio frequency and electromagnetic interference (EMI) problems—something he didn't have to contend with 15 years ago; (3) modern production economics has replaced the steel cabinets which shield or reduce radiated emanation with plastic cabinets which provide little or no shielding.

The FCC defines a computing device as

> Any electronic device or system that generates and uses timing pulses at a rate in excess of 10,000 pulses (cycles) per second and uses digital techniques; inclusive of telephone equipment that uses digital techniques or any device or system that generates and utilizes radio frequency energy for the purpose of performing data processing functions, such as electronic computations, operations, transformations, recording, filing, sorting, storage, retrieval or transfer . . . .

This definition was intentionally made broad to include as many products as possible. Thus, if a product uses digital circuitry and has a clock frequency greater than 10 kHz, it is a computing device under the FCC definition. This definition covers most digital electronics manufactured today.

Computing devices covered by this definition are divided into two classes:

Class A: A computing device that is marketed for use in a commercial, industrial, or business environment.

Class B: A computing device that is marketed for use in a residential environment, notwithstanding its use in a commercial, industrial, or business environment.

Since Class B devices are more likely to be located in closer proximity to radio and television receivers, the emission limits for these devices are about 10 dB more restrictive than those for Class A devices.

Meeting these technical standards is the obligation of the manufacturer or importer of a product. To guarantee compliance, the FCC requires the manufacturer to test the product for compliance before the product can be marketed in the United States. The FCC defines marketing as shipping, selling, offering for sale, importing, and so on. Therefore, until a product

complies with the rules, it cannot *legally* be advertised since this could be considered an offer for sale. In order to legally advertise a product prior to compliance, the advertisement must contain a statement that *the device is subject to FCC rules and will comply with the rules prior to delivery*.

For personal computers and their peripherals (a subcategory of Class B), the manufacturer must submit the test data to the FCC and obtain *certification* from the FCC before it can market the product. The Commission can, if it so desires, ask for a sample product to test before providing the certification.

For all other products (Class A and Class B—other than personal computers and their peripherals) the manufacturer must *verify* compliance by testing the product before marketing it. Verification is a self-certification procedure where nothing is submitted to the FCC unless specifically requested. Compliance is by random sampling of products by the FCC.

The time required to do the compliance tests (and re-do them if the product fails), and the time required to obtain certification from the Commission (if required), should be scheduled into the product's development timetable.

Testing must be done on a sample *that is representative of production units*. This usually involves a production or preproduction model. Compliance testing must therefore be one of the last items in the development timetable. This is no time for unexpected surprises! If the product fails the test, changes at this point are difficult and expensive. Therefore it is desirable to approach the final compliance test with a high degree of confidence that the product will pass. This can be done if (1) proper EMC design principles (as discussed in this book) have been used throughout the design and (2) preliminary emission testing was done on early models and subassemblies.

These rules not only specify the technical standards (limits) that a product must satisfy but also the administrative procedures that must be followed and the measuring methods that must be used to determine compliance. It should be noted that the limits and the measurement procedures are interrelated. The derived limits were based on specified measurement procedures. Therefore compliance measurements must be made following the procedure outlined by the FCC in FCC/OST MP-4 "FCC Methods of Measurement of Radio Noise Emissions from Computing Devices" (see Appendix F).

Tests must be made on a complete system, with all cables connected and configured in a reasonable way that tends to maximize the emission.

For radiated emission the measurement procedure specifies an open field (or equivalent) measurement made over a ground plane with a tuned dipole (or other correlatable, linearly polarized) antenna. This is shown in Fig. 1-5.

Table 1-1 gives the radiated emission limits for a Class A product when measured at a distance of 30 m, and Table 1-2 lists the limits for a Class B product when measured at a distance of 3 m.

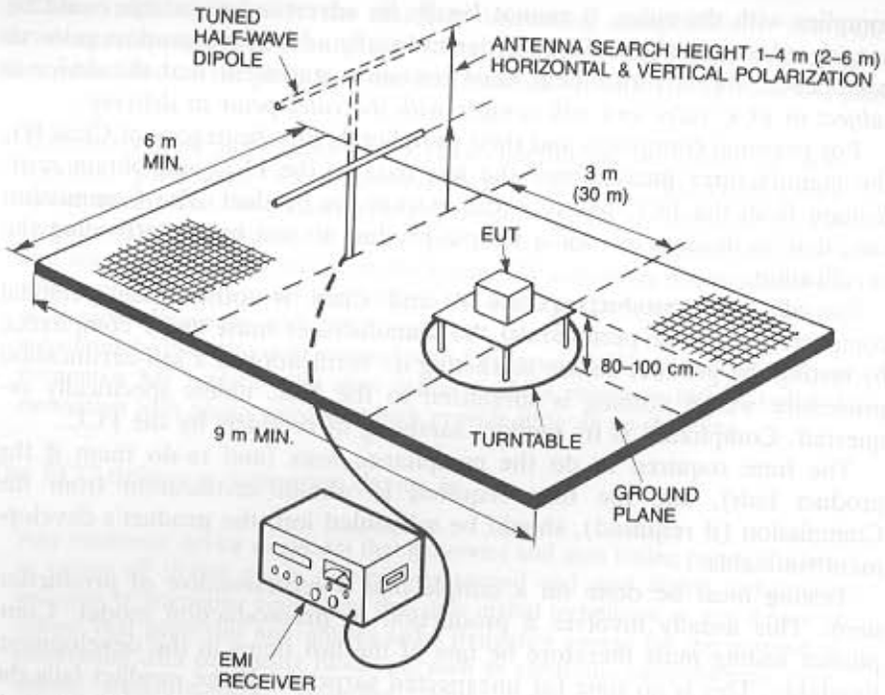

Figure 1-5. *Open field test site for FCC radiated emission test. Equipment under test (EUT) is on the turntable.*

Table 1-1 FCC Class A Radiated Emission Limits

Frequency (MHz)	Measuring Distance (m)	Field Strength (μV/m)
30–88	30	30
88–216	30	50
216–1000	30	70

Table 1-2 FCC Class B Radiated Emission Limits

Frequency (MHz)	Measuring Distance (m)	Field Strength (μV/m)
30–88	3	100
88–216	3	150
216–1000	3	200

A comparison between the Class A and Class B limits must be done at the same measuring distance. Therefore, if the Class A limits are extrapolated to the 3-m measuring distance (using a $1/r$ extrapolation), the two sets of limits can then be compared as shown in Fig. 1-6. As can be seen, the Class B limits are more restrictive by about a factor of 3 (10 dB).

Conducted emission limits are specified in the rules because the FCC believes that at frequencies below 30 MHz the primary cause of interference with communications occurs by conducting rf energy onto the ac power line and subsequently radiating it from the power line.

Table 1-3 shows both the Class A and B conducted emission limits. These voltages are measured common-mode (hot to ground, and neutral to ground) on the ac power line using a 50 Ω/50 μH line impedance stabilization network (LISN) as specified in the measurement procedure (see Appendix F). Figure 1-7 shows a typical FCC-conducted emission test setup.

Not only must a device be tested for compliance with the technical standards, but it must also be labeled as compliant, and information must be provided to the user on its interference potential.

In addition to the technical specifications mentioned earlier, the rules also contain a noninterference requirement which states that if use of the product causes harmful interference, the *user* can be required to cease operation of the device. Notice the difference in responsibility between the technical

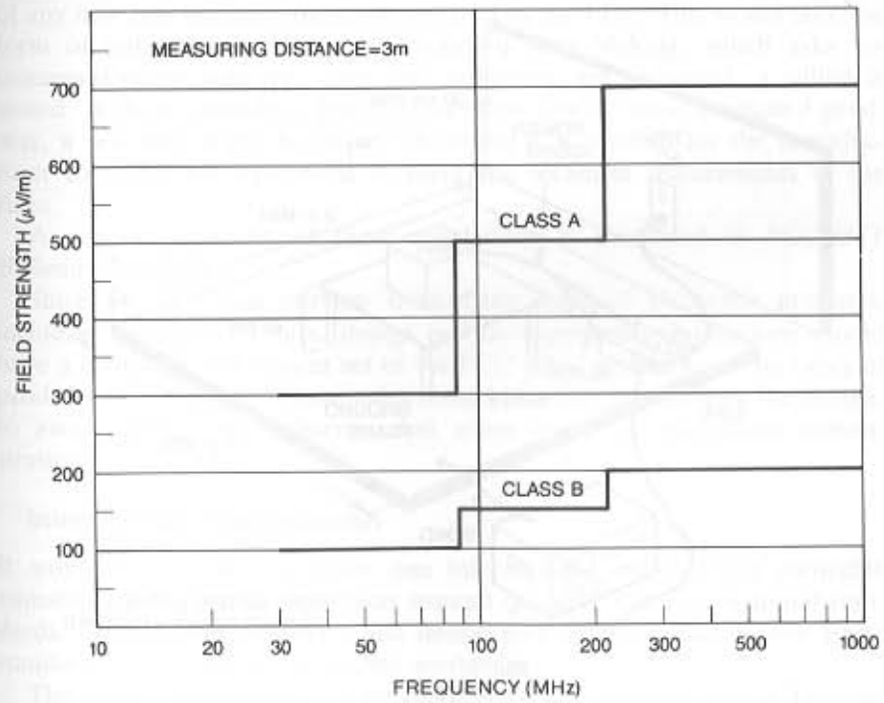

Figure 1-6. *FCC Part 15, Subpart J radiated emission limits measured at a distance of 3 m.*

Table 1-3 FCC Conducted Emission Limits

Frequency (MHz)	Class A (μV)	Class B (μV)
0.45–1.6	1000	250
1.6 –30	3000	250

specifications and the noninterference requirement. Although the technical specification is the responsibility of the manufacturer or importer of the product, the noninterference requirement is the responsibility of the user of the product.

In addition to the initial certification or verification of a product, the rules also specify that the manufacturer is responsible for the continued compliance of subsequently manufactured equipment.

If a change is made to a compliant product, the manufacturer or importer has the responsibility to determine whether that change has an effect on the compliance of the product. The FCC has cautioned manufacturers (Public Notice 3281, April 7, 1982) to note that

> Many changes, which on their face seem insignificant, are in fact very significant. Thus a change in the layout of a circuit board, or the addition or removal or even rerouting of a wire, or even a change in the logic will almost surely change the emission characteristics of the device . . . . Whether this change in characteristics is enough to throw the product out of compliance can best be determined by retesting.

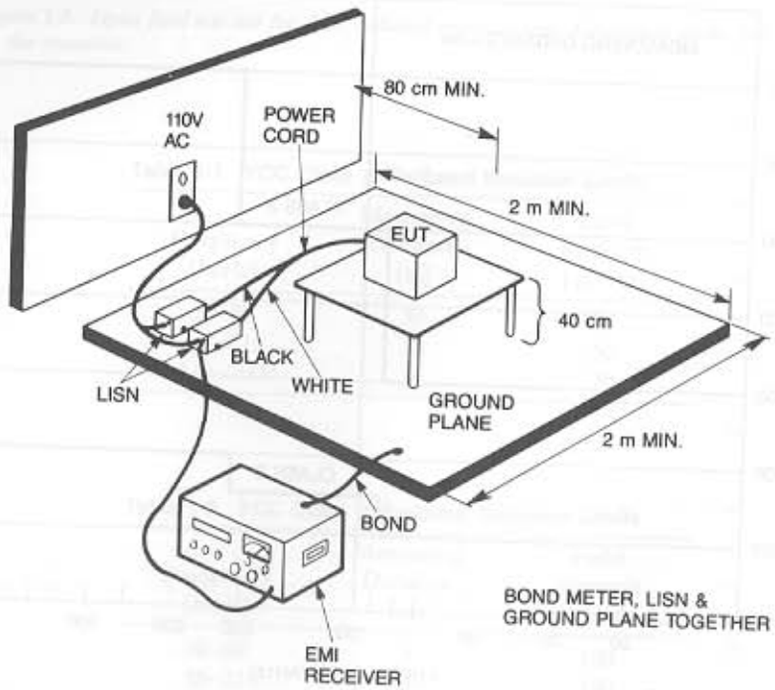

Figure 1-7. Test setup for FCC conducted emission measurements.

At the time of this writing (July 1987), the FCC has temporarily exempted five subclasses of digital devices from meeting the technical standards of the requirements. These are

1. Digital electronics built into a transportation vehicle, such as a car, plane, or boat.
2. Industrial control systems used in an industrial plant, factory, or public utility.
3. Industrial, commercial, and medical test equipment.
4. Microprocessor controlled appliances, such as a dishwasher, clothes dryer, or power tool.
5. Specialized medical devices, generally used at the direction or under the supervision of a licensed health care practitioner.

Each of these devices is subject to the noninterference requirement of the rules. Since the exemptions mentioned are temporary they can be edited out of any new rule-making procedure initiated by the FCC. This would take the form of publishing a Notice of Proposed Rule-Making, which asks for comments from industry; after the comments are reviewed, a ruling is issued. If there actually is interference from any of these exempted products, a new rule might be made. Therefore it is prudent for the manufacturer to design all equipment to meet the technical requirements of the rules.

A general overview of these regulations is contained in *FCC/OST Bulletin* 62 (1984).

Since the FCC has purview over many types of electronic products, including digital electronics, design and development organizations should have a complete and current set of the FCC rules applicable to the types of products they produce. These rules should be referenced during the design, to avoid subsequent embarrassment when and if a compliance demonstration is required.

International Harmonization

It would be desirable to have one international standard for allowable emission from electronic products instead of many different national standards. Then a manufacturer could design and test a product to one EMC standard that would be acceptable worldwide.

The most likely vehicle for accomplishing this objective is the International Special Committee on Radio Interference (CISPR, from its title in

French). CISPR was formed in 1934 to determine measurement methods and limits for radio-frequency interference in order to facilitate international trade. CISPR has no regulatory authority, but its standards, when adopted by governments, become national standards. In 1985 CISPR adopted a new set of emission standards (*Publication 22*) for Information Technology Equipment (digital electronics). Many European countries have adopted these requirements as their national standard, and more are expected to do so in the future. The United States, as a voting member of CISPR, voted in favor of the new standard. This put considerable pressure on the FCC to adopt the same standards. Therefore the limits of *CISPR Publication 22* are likely to become the international EMC standard.

Figure 1-8 compares the new CISPR radiated emission standard with the present FCC standard. The FCC limits have been extrapolated to a 10-m measuring distance for this comparison. As can be seen, the CISPR limits are more restrictive in the frequency range from 88 to 230 MHz. From 88 to 216 MHz the CISPR Class A limit is 3.5 dB more restrictive, and from 216 to 230 MHz the CISPR Class A limit is 6.5 dB more restrictive than the present FCC requirements.

Figure 1-9 compares the new CISPR narrowband conducted emission standard to the present FCC standard. A major diffrence is that CISPR imposes a limit in the frequency range of 150 to 450 kHz where no FCC limit presently exists. For Class A products the CISPR standard is 9.5 dB more restrictive from 1.6 MHz to 30 MHz. For Class B products the CISPR standard is 2 dB more restrictive from 0.5 to 5 MHz.

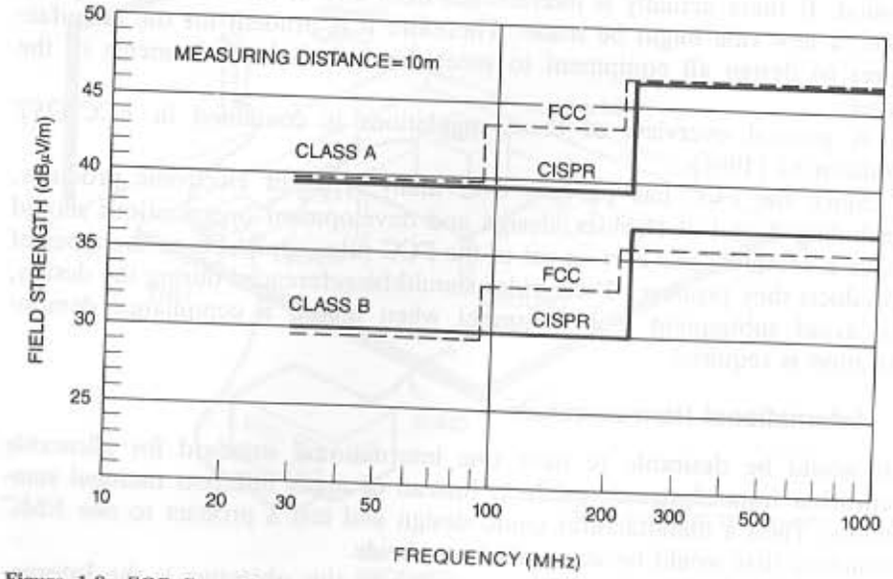

Figure 1-8. *FCC Part 15, Subpart J and CISPR, Publication 22, radiated emission limits measured at a distance of 10 m.*

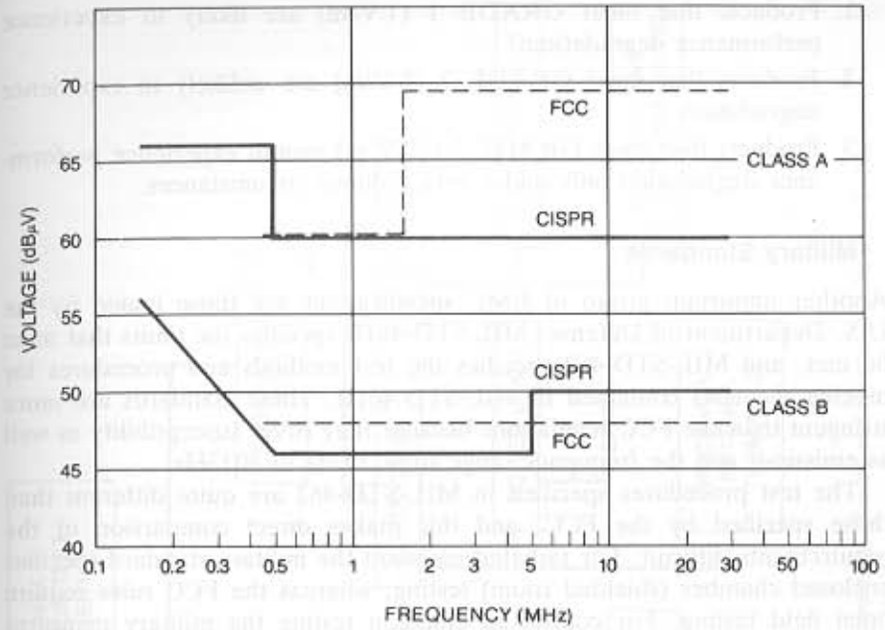

Figure 1-9. *FCC Part 15, Subpart J and CISPR, Publication 22, narrowband conducted emission limits.*

Susceptibility

In August 1982 the U.S. Congress amended the Communications Act of 1934 (House Bill #3239) to give the FCC authority to regulate the susceptibility of home electronics equipment and systems. Examples of home electronic equipment are radio and television sets, home burglar alarm and security systems, automatic garage door openers, electronic organs, record turntables, and stereo/high fidelity amplifier systems. Although this legislation is aimed primarily at home equipment and systems, it is not intended to prevent the FCC from adopting standards for devices that are also used outside the home. To date, however, the FCC has not acted on this authority. Although it published an inquiry into the Problem of Radio Frequency Interference to Electronic Equipment (General Docket No. 78-369), the FCC relies on self-regulation by industry. Should industry become lax in this respect, the FCC may move to exercise its jurisdiction.

Surveys of the electromagnetic environment (Heirman 1976; Janes 1977) have shown that a field strength greater than 2 V/m occurs about 1% of the time. Since there is no legal susceptibility requirement for commercial equipment, a reasonable immunity level objective would be 2 V/m.

The government of Canada has released an Electromagnetic Compatibility Advisory Bulletin (EMCAB 1) in which it defines three levels or grades of immunity for electronic equipment and states the following:

1. Products that meet GRADE 1 (1 V/m) are likely to experience performance degradation.
2. Products that meet GRADE 2 (3 V/m) are unlikely to experience degradation.
3. Products that meet GRADE 3 (10 V/m) should experience performance degradation only under very arduous circumstances.

Military Standards

Another important group of EMC specifications are those issued by the U.S. Department of Defense. MIL-STD-461B specifies the limits that must be met, and MIL-STD-462 specifies the test methods and procedures for making the tests contained in MIL-STD-461B. These standards are more stringent than the FCC regulations because they cover susceptibility as well as emission, and the frequency range from 30 Hz to 40 GHz.

The test procedures specified in MIL-STD-462 are quite different than those specified by the FCC, and this makes direct comparison of the requirements difficult. For radiated emission the military standard specifies enclosed chamber (shielded room) testing, whereas the FCC rules require open field testing. For conducted emission testing the military measures current and the FCC measures voltage.

The categories of tests specified by MIL-STD-461B are organized as shown in the block diagram in Fig. 1-10. Tests are required for both radiated and conducted emissions as well as radiated and conducted susceptibility. Table 1-4 is a list of the emission and susceptibility requirements established by MIL-STD-461B. The Military Specification is a comprehensive document, and can also be used by industry as a guideline for designing interference-free nonmilitary equipment.

TYPICAL NOISE PATH

A block diagram of a typical noise path is shown in Fig. 1-11. As can be seen, three elements are necessary to produce a noise problem. First, there must be a *noise source*. Second, there must be a *receptor* circuit that is susceptible to the noise. Third, there must be a *coupling channel* to transmit the noise from the source to the receiver.

The first step in analyzing a noise problem is to define the problem. This is done by determining what the noise source is, what the receptor is, and how the source and receptor are coupled together. It follows that there are three ways to break the noise path: (1) the noise can be suppressed at the source, (2) the receptor can be made insensitive to the noise, or (3) the transmission through the coupling channel can be minimized. In some cases, noise suppression techniques must be applied to two or to all three parts of the noise path.

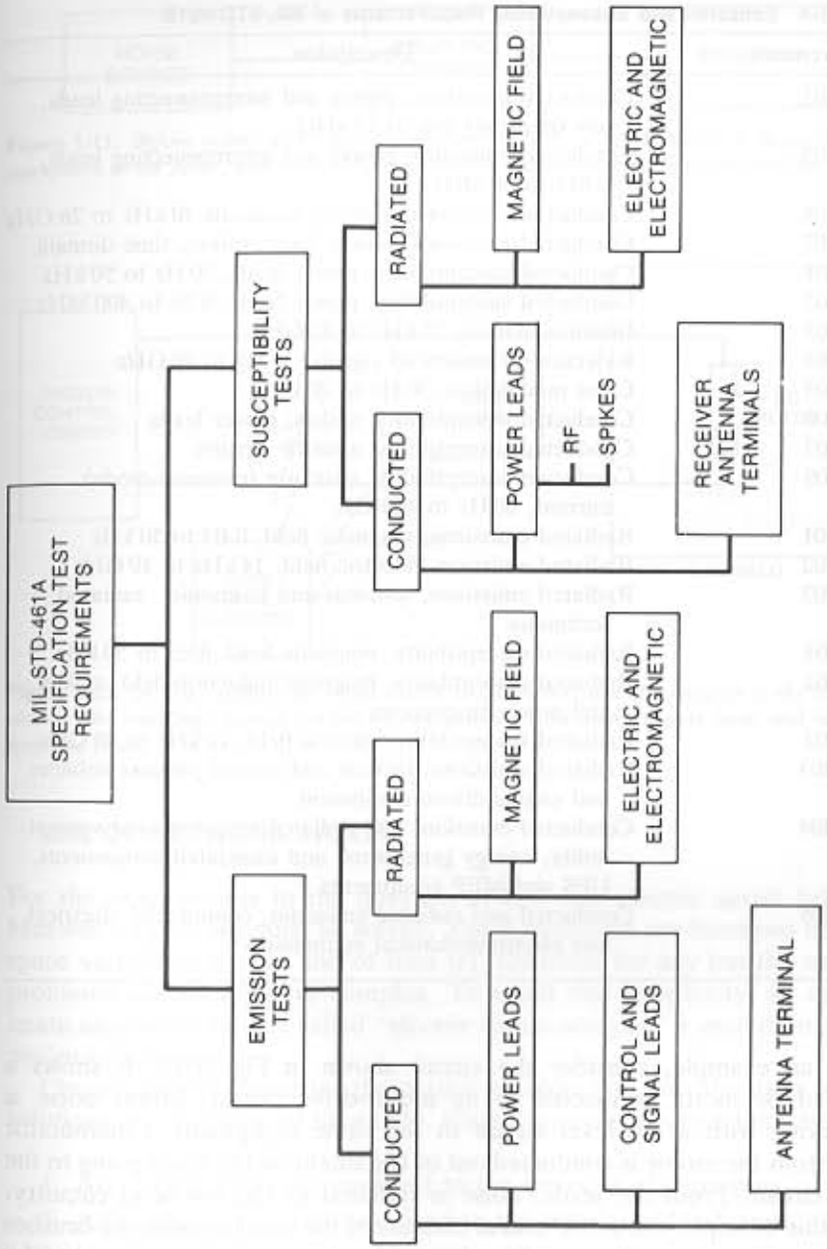

Figure 1-10. *Military specifications cover both the emission of noise and the susceptibility to it. In both cases tests of conducted and radiated noise are specified.*

Table 1-4 Emission and Susceptibility Requirements of MIL-STD-461B

Requirement	Description
CE01	Conducted emissions, power and interconnecting leads, low-frequency (up to 15 kHz)
CE03	Conducted emissions, power and interconnecting leads, 0.015 to 50 MHz
CE06	Conducted emissions, antenna terminals 10 kHz to 26 GHz
CE07	Conducted emissions, power leads, spikes, time domain
CS01	Conducted susceptibility, power leads, 30 Hz to 50 kHz
CS02	Conducted susceptibility, power leads, 0.05 to 400 MHz
CS03	Intermodulation, 15 kHz to 10 GHz
CS04	Rejection of undesired signals, 30 Hz to 20 GHz
CS05	Cross modulation, 30 Hz to 20 GHz
CS06	Conducted susceptibility, spikes, power leads
CS07	Conducted susceptibility, squelch circuits
CS09	Conducted susceptibility, structure (common-mode) current, 60 Hz to 100 kHz
RE01	Radiated emissions, magnetic field, 0.03 to 50 kHz
RE02	Radiated emissions, electric field, 14 kHz to 10 GHz
RE03	Radiated emissions, spurious and harmonics, radiated technique
RS01	Radiated susceptibility, magnetic field, 0.03 to 50 kHz
RS02	Radiated susceptibility, magnetic induction field, spikes and power frequencies
RS03	Radiated susceptibility, electric field, 14 kHz to 40 GHz
UM03	Radiated emissions, tactical and special purpose vehicles and engine-driven equipment
UM04	Conducted emissions and radiated emissions and susceptibility, energy generators, and associated components, UPS and MEP equipments
UM05	Conducted and radiated emissions, commercial electrical and electromechanical equipments

As an example, consider the circuit shown in Fig. 1-12. It shows a shielded dc motor connected to its motor-drive circuit. Motor noise is interfering with a low-level circuit in the same equipment. Commutator noise from the motor is conducted out of the shield on the leads going to the drive circuit. From the leads, noise is radiated to the low-level circuitry.

In this example, the noise source consists of the arcs between the brushes and the commutator. The coupling channel has two parts: conduction on the motor leads and radiation from the leads. The receptor is the low-level circuit. In this case not much can be done about the source or the receptor. Therefore the interference must be eliminated by breaking the coupling channel. Noise conduction out of the shield or radiation from the leads must be stopped, or both steps may be necessary. This example is discussed more fully in Chapter 5.

Figure 1-11. *Before noise can be a problem, there must be a noise source, a receptor that is susceptible to the noise, and a coupling channel that transmits the noise to the receptor.*

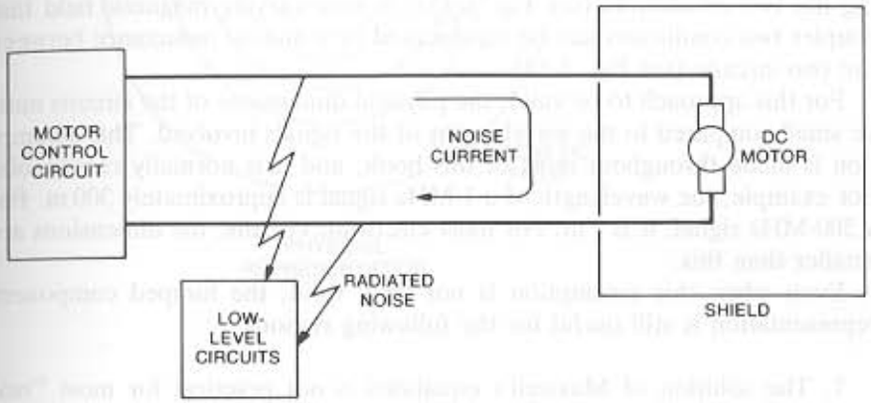

Figure 1-12. *In this example the noise source is the motor, and the receptor is the low-level circuit. The coupling channel consists of conduction on the motor supply leads and radiation from the leads.*

USE OF NETWORK THEORY

For the exact answer to the question of how any electric circuit behaves, Maxwell's equations must be solved. These equations are functions of three space variables (x, y, z) and of time (t). Solutions for any but the simplest problems are usually very complex. To avoid this complexity, an approximate analysis technique called "electric circuit analysis" is used during most design procedures.

Circuit analysis eliminates the spatial variables and provides approximate solutions as a function of time only. Circuit analysis assumes the following:

1. All electric fields are confined to the interiors of capacitors.
2. All magnetic fields are confined to the interiors of inductors.
3. Dimensions of the circuits are small compared to the wavelength(s) under consideration.

What is really implied is that external fields, even though actually present, can be neglected in the solution of the network. Yet these external fields may not necessarily be neglected where their effect on other circuits is concerned.

For example, a 100-W power amplifier may radiate 100 mW of power. These 100 mW are completely negligible as far as the analysis of the power amplifier is concerned. However, if only a small percentage of this radiated power is picked up on the input of a sensitive amplifier, it may produce a large noise signal.

Whenever possible, noise coupling channels are represented as equivalent lumped component networks. For instance, a time-varying electric field existing between two conductors can be represented by a capacitor connecting the two conductors (see Fig. 1-13). A time-varying magnetic field that couples two conductors can be represented by a mutual inductance between the two circuits (see Fig. 1-14).

For this approach to be valid, the physical dimensions of the circuits must be small compared to the wavelengths of the signals involved. This assumption is made throughout most of this book, and it is normally reasonable. For example, the wavelength of a 1-MHz signal is approximately 300 m. For a 300-MHz signal, it is 1 m. For most electronic circuits, the dimensions are smaller than this.

Even when this assumption is not truly valid, the lumped component representation is still useful for the following reasons:

1. The solution of Maxwell's equations is not practical for most "real world" noise problems because of the complicated boundary conditions.
2. Lumped component representation, although it does not necessarily give the correct numerical answer, does clearly show how noise

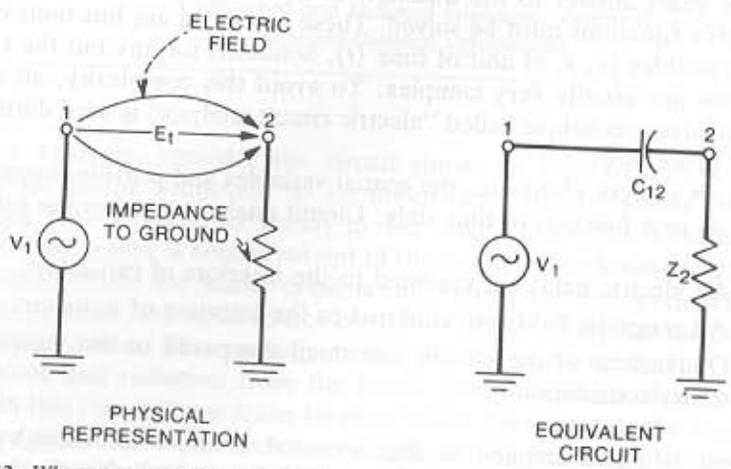

Figure 1-13. *When two circuits are coupled by an electric field, the coupling can be represented by a capacitor.*

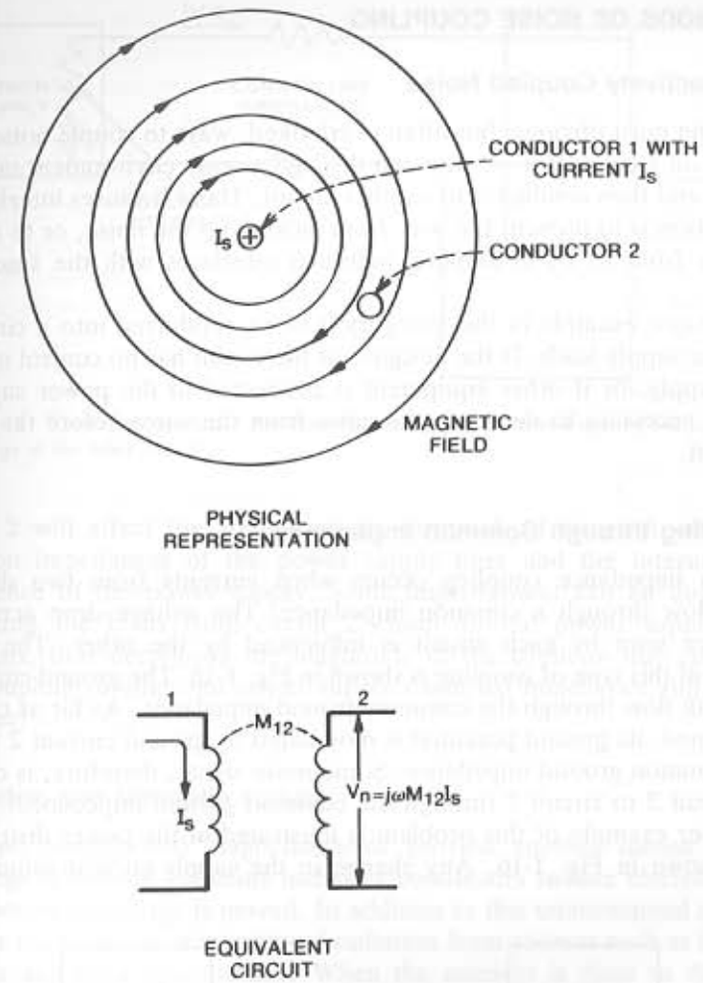

Figure 1-14. *When two circuits are coupled by a magnetic field, the coupling can be represented as a mutual inductance.*

depends on the system parameters. On the other hand, the solution of Maxwell's equations, even if possible, does not show such dependence clearly.

In general, the numerical values of the lumped components are extremely difficult to calculate with any precision, except for certain special geometries. One can conclude, however, that these components exist, and as will be shown, the results can be very useful even when the components are only defined in a qualitative sense.

METHODS OF NOISE COUPLING

Conductively Coupled Noise

One of the most obvious, but often overlooked, ways to couple noise into a circuit is on a conductor. A wire run through a noisy environment may pick up noise and then conduct it to another circuit. There it causes interference. The solution is to prevent the wire from picking up the noise, or to remove the noise from it, by decoupling before it interferes with the susceptible circuit.

The major example in this category is noise conducted into a circuit on the power supply leads. If the designer of the circuit has no control over the power supply, or if other equipment is connected to the power supply, it becomes necessary to decouple the noise from the wires before they enter the circuit.

Coupling through Common Impedance

Common impedance coupling occurs when currents from two different circuits flow through a common impedance. The voltage drop across the impedance seen by each circuit is influenced by the other. The classic example of this type of coupling is shown in Fig. 1-15. The ground currents 1 and 2 both flow through the common ground impedance. As far as circuit 1 is concerned, its ground potential is modulated by ground current 2 flowing in the common ground impedance. Some noise signal, therefore, is coupled from circuit 2 to circuit 1 through the common ground impedance.

Another example of this problem is illustrated in the power distribution circuit shown in Fig. 1-16. Any change in the supply current required by

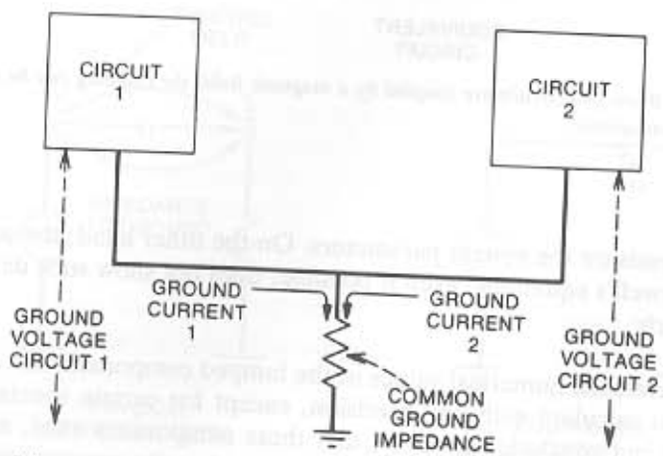

Figure 1-15. *When two circuits share a common ground, the ground voltage of each one is affected by the ground current of the other circuit.*

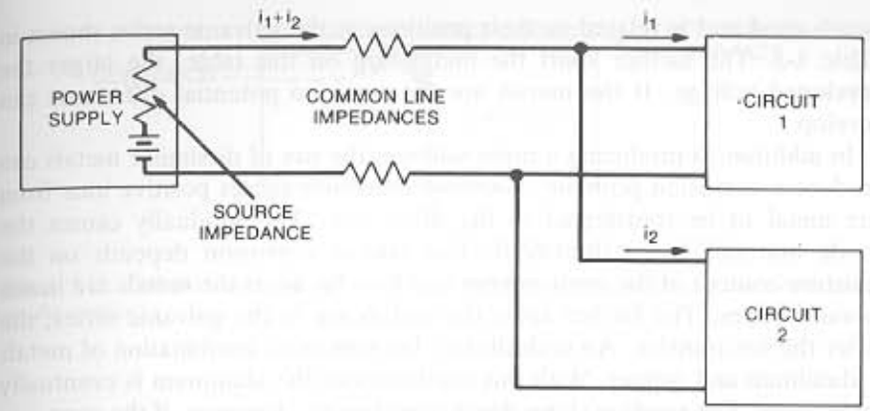

Figure 1-16. *When two circuits use a common power supply, current drawn by one circuit affects the voltage at the other circuit.*

circuit 2 will affect the voltage at the terminals of circuit 1, due to the common impedances of the power supply lines and the internal source impedance of the power supply. Some improvement can be obtained by connectng the leads from circuit 2 closer to the power supply output terminals, thus decreasing the magnitude of the common line impedance. The coupling through the power supply's internal impedance still remains, however.

Electric and Magnetic Fields

Radiated electric and magnetic fields provide another means of noise coupling. All circuit elements including conductors radiate electromagnetic fields whenever charge is moved. In addition to this unintentional radiation, there is the problem of intentional radiation from sources such as broadcast stations and radar transmitters. When the receiver is close to the source (near field), electric and magnetic fields are considered separately. When the receiver is far from the source (far field), the radiation is considered as combined electric and magnetic or electromagnetic radiation.*

MISCELLANEOUS NOISE SOURCES

Galvanic Action

If dissimilar metals are used in the signal path in low-level circuitry, a noise voltage may appear due to the galvanic action between the two metals. The presence of moisture or water vapor in conjunction with the two metals produces a chemical wet cell. The voltage developed depends on the two

*See Chapter 6 for an explanation of near field and far field.

metals used and is related to their positions in the galvanic series shown in Table 1-5. The farther apart the metals are on this table, the larger the developed voltage. If the metals are the same no potential difference can develop.

In addition to producing a noise voltage, the use of dissimilar metals can produce a corrosion problem. Galvanic corrosion causes positive ions from one metal to be transferred to the other one. This gradually causes the anode material to be destroyed. The rate of corrosion depends on the moisture content of the environment and how far apart the metals are in the galvanic series. The farther apart the metals are in the galvanic series, the faster the ion transfer. An undesirable, but common, combination of metals is aluminum and copper. With this combination, the aluminum is eventually eaten away. The reaction slows down considerably, however, if the copper is coated with lead-tin solder since aluminum and lead-tin solder are closer in the galvanic series.

Four elements are needed before galvanic action can occur:

1. Anode material (higher rank in Table 1-5)
2. Electrolyte (usually present as moisture)
3. Cathode material (lower rank in Table 1-5)
4. Conducting electrical connection between anode and cathode (usually present as a leakage path).

Table 1-5 Galvanic Series

	ANODIC END (Most susceptible to corrosion)		
Group I	1. Magnesium		13. Nickel (active)
	2. Zinc		14. Brass
	3. Galvanized steel		15. Copper
Group II	4. Aluminum 2S	Group IV	16. Bronze
	5. Cadmium		17. Copper-nickel alloy
	6. Aluminum 17ST		18. Monel
			19. Silver solder
	7. Steel		20. Nickel (passive)[a]
	8. Iron		21. Stainless steel (passive)[a]
	9. Stainless steel (active)		
Group III	10. Lead-tin solder	Group V	22. Silver
	11. Lead		23. Graphite
	12. Tin		24. Gold
			25. Platinum
			CATHODIC END (Least susceptible to corrosion)

[a]Passivation by immersion in a strongly oxidizing acidic solution.

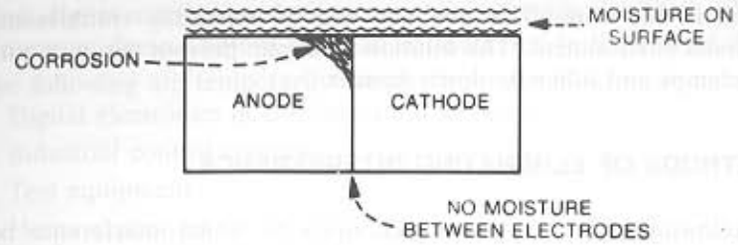

Figure 1-17. *Galvanic action can occur if two dissimilar metals are joined and moisture is present on the surface.*

Galvanic action can take place even if moisture does not get between the anode and cathode. All that is needed is some moisture on the surface where the two metals come together, as shown in Fig. 1-17.

As seen in Table 1-5, the metals of the galvanic series are divided into five groups. When dissimilar metals must be combined, it is desirable to use metals from the same group.

Electrolytic Action

A second type of corrosion is due to electrolytic action. It is caused by a direct current flowing between two metals with an electrolyte (which could be slightly acidic ambient moisture) between them. This type of corrosion does not depend on the two metals used and will occur even if both are the same. The rate of corrosion depends on the magnitude of the current and the conductivity of the electrolyte.

Triboelectric Effect

A charge can be produced on the dielectric material within a cable, if the dielectric does not maintain contact with the cable conductors. This is called the triboelectric effect. It is usually caused by mechanical bending of the cable. The charge acts as a noise voltage source within the cable. Eliminating sharp bends and cable motion minimizes this effect. A special "low noise" cable is available in which the cable is chemically treated to minimize the possibility of charge buildup on the dielectric.

Conductor Motion

If a wire is moved through a magnetic field, a voltage is induced between ends of the wire. Due to power wiring and other circuits with high current flow, stray magnetic fields exist in most environments. If a wire with a low-level signal is then allowed to move through this field, a noise voltage is

induced in the wire. This problem can be especially troublesome in a vibrational environment. The solution is simple: prevent wiring motion with cable clamps and other tie-down devices.

METHODS OF ELIMINATING INTERFERENCE

The following chapters present techniques by which interference between electronic circuits can be eliminated, or at least reduced. The primary methods available for combatting interference are listed as follows:

1. Shielding
2. Grounding
3. Balancing
4. Filtering
5. Isolation
6. Separation and orientation
7. Circuit impedance level control
8. Cable design
9. Cancellation techniques (frequency or time domain).

Appendix B, presented in the form of a checklist, is a summary of the more commonly used noise reduction techniques. Even with all these methods available, it should be remembered that noise usually cannot be eliminated; it can only be minimized to the point where it no longer causes interference.

In all but the simplest cases, a single unique solution to the noise reduction problem may not exist. Compromises are generally required, and which of the many alternative solutions is the best can be the subject of considerable disagreement. In this book we will present the techniques which are useful for decreasing interference. Decisions on which techniques should be used in a specific case, however, are things that must be determined by the system design engineer.

SUMMARY

- Designing equipment that does not generate noise is as important as designing equipment that is not susceptible to noise.
- To be cost-effective, noise suppression should be considered early in the design.
- Noise sources can be grouped into three categories: (1) intrinsic noise sources, (2) man-made noise sources, and (3) noise due to natural disturbances.

- Most digital electronics devices must comply with the FCC rules on computing devices before they can be marketed in the United States.
- The following are temporarily exempt from the FCC requirements:
  Digital electronics in transportation vehicles
  Industrial control systems
  Test equipment
  Home appliances
  Specialized medical devices
- Electromagnetic compatibility is the ability of an electronic system to function properly in its intended electromagnetic environment.
- Electromagnetic compatibility has two aspects, emission and susceptibility.
- Electromagnetic compatibility should be a major design objective.
- Three items are necessary to produce a noise problem:
  A noise source
  A coupling channel
  A susceptible receptor
- The three primary means of noise coupling are the following:
  Conductive coupling
  Common impedance coupling
  Coupling by radiated electromagnetic fields
- Metals in contact with each other must be galvanically compatible.
- There are many techniques by which noise can be reduced in an electronic system; a unique solution to most noise reduction problems does not exist.

BIBLIOGRAPHY

Bell Laboratories. *Physical Design of Electronic Systems*. Vol. 2, Chapter 5 (Electrochemistry and Protection of Surfaces). Prentice-Hall, Englewood Cliffs, N.J., 1970.

CISPR, Publication 22. "Limits and Methods of Measurement of Radio Interference Characteristics of Information Technology Equipment." 1985.

Code of Federal Regulations, Title 47 (47CFR). Part 15, Subpart J. "Computing Devices."

Cohen, T. J., and McCoy, L. G. "RFI—A New Look at an Old Problem." *QST*, March 1975.

EMCAB 1. "Immunity of Electrical/Electronic Equipment Intended to Operate in the Canadian Radio Environment." Government of Canada, Department of Communications, Issue 1, September 1977, and Issue 2, August 1982.

FCC. "Understanding the FCC Regulations Concerning Computing Devices." *OST Bulletin* 62, 1984.

FCC. "FCC Methods of Measurement of Radio Noise Emissions from Computing Devices." FCC/OST MP-4, 1983.

FCC. "Commission Cautions against Changes in Verified Computing Equipment." Public Notice No. 3281, April 7, 1982.

Hierman, D. N. "Broadcast Electromagnetic Environment Near Telephone Equipment." IEEE National Telecommunications Conference, 1976.

Janes, D. E., et al. "Nonionizing Radiation Exposure in Urban Areas of the United States." *Proceedings of the 5th International Radiation Protection Association*. April 1977.

Mertel, H. K. "International and National Radio Frequency Interference Regulations." Don White Consultants, Germantown, Md., 1978.

MIL-STD-461B. "Electromagnetic Interference Characteristic Requirements for Equipment." April 1980.

MIL-STD-462. "Electromagnetic Interference Characteristics, Measurement of." July 1967.

Rasek, W. G. "German RFI Protection Regulations Affecting EDP Installations." *EMC Technology*, April–June 1983.

White, D. R. J. *Electromagnetic Interference and Compatibility*. Vol. 1 (Electrical Noise and EMI Specifications). Don White Consultants, Germantown, Md., 1971.

White, D. R. J. *Electromagnetic Interference and Compatibility*. Vol. 2 (EMI Test Methods and Procedures). Don White Consultants, Germantown, Md., 1974.

2 CABLING

This chapter is devoted to cabling and cable shielding, and Chapter 3 covers grounding. Since the subjects of cable shielding and grounding are closely related, these two chapters should be studied together. Chapter 2, for example, shows that a cable shield used to suppress electric fields should be grounded, but Chapter 3 explains where that ground should be made.

Cables are important because they are the longest parts of a system and therefore act as efficient antennas that pick up and/or radiate noise. This chapter covers the coupling mechanisms that occur between fields and cables, and between cables (crosstalk). Both unshielded and shielded cables are considered.

In this chapter we assume the following:

1. Shields are made of nonmagnetic materials and have a thickness much less than a skin depth at the frequency of interest.*
2. The receptor is not coupled so tightly to the source that it loads down the source.
3. Induced currents in the receptor circuit are small enough not to distort the original field. (This does not apply to a shield around the receptor circuit.)
4. Cables are short compared to a wavelength.

Since cables are assumed short compared to a wavelength, the coupling between circuits can be represented by lumped capacitance and inductance between the conductors. The circuit can then be analyzed by normal network theory.

Three types of couplings are considered. The first is capacitive or electric coupling, which results from the interaction of electric fields between circuits. This type of coupling is commonly identified in the literature as electrostatic coupling, an obvious misnomer since the fields are not static.

The second is inductive, or magnetic, coupling, which results from the interaction between the magnetic fields of two circuits. This type of coupling is commonly described as electromagnetic, again misleading terminology since no electric fields are involved. The third is a combination of electric and magnetic fields and is appropriately called electromagnetic coupling or

*If the shield is thicker than a skin depth, some additional shielding is present besides that calculated by methods in this chapter. The effect is discussed further in Chapter 6.

radiation. The techniques developed to cope with electric coupling are also appropriate for the electromagnetic case. For analysis in the near field, we normally consider the electric and magnetic fields separately, whereas the electromagnetic field case is considered when the problem is in the far field.* The circuit causing the interference is called the source, and the circuit being affected by the interference is called the receptor.

CAPACITIVE COUPLING

A simple representation of capactive coupling between two conductors is shown in Fig. 2-1. Capacitance C_{12} is the stray capacitance between conductors 1 and 2. Capacitance C_{1G} is the capacitance between conductor 1 and ground, C_{2G} is the total capacitance between conductor 2 and ground, and R is the resistance of circuit 2 to ground. The resistance R results from the circuitry connected to conductor 2 and is not a stray component. Capacitance C_{2G} consists of both the stray capacitance of conductor 2 to ground and the effect of any circuitry connected to conductor 2.

The equivalent circuit of the coupling is also shown in Fig. 2-1. Consider the voltage V_1 on conductor 1 as the source of interference and conductor 2 as the affected circuit or receptor. Any capacitance connected directly across the source, such as C_{1G} in Fig. 2-1, can be neglected since it has no effect on the noise coupling. The noise voltage V_N produced between conductor 2 and ground can be expressed as follows:

$$V_N = \frac{j\omega[C_{12}/(C_{12}+C_{2G})]}{j\omega + 1/R(C_{12}+C_{2G})} V_1 . \qquad (2\text{-}1)$$

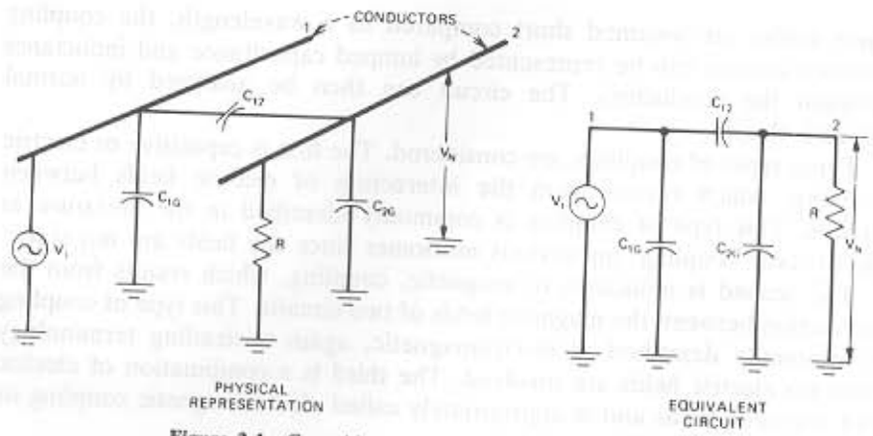

Figure 2-1. *Capacitive coupling between two conductors.*

*See Chapter 6 for definitions of near and far fields.

Equation 2-1 does not show clearly how the pickup voltage depends on the various parameters. Equation 2-1 can be simplified for the case when R is a lower impedance than the impedance of the stray capacitance C_{12} plus C_{2G}. In most practical cases this will be true. Therefore, for

$$R \ll \frac{1}{j\omega(C_{12}+C_{2G})} ,$$

Eq. 2-1 can be reduced to the following:

$$\boxed{V_N = j\omega R C_{12} V_1 .} \qquad (2\text{-}2)$$

Electric field (capacitive) coupling can be modeled as a current generator, connected between the receptor circuit and ground, with a magnitude of $j\omega C_{12}V_1$. This is shown in Fig. 2-9A.

Equation 2-2 is the most important equation describing the capacitive coupling between two conductors, and it clearly shows how the pickup voltage depends on the parameters. Equation 2-2 shows that the noise voltage is directly proportional to the frequency ($\omega = 2\pi f$) of the noise source, the resistance R of the affected circuit to ground, the capacitance C_{12} between conductors 1 and 2, and the magnitude of the voltage V_1.

Assuming that the voltage and frequency of the noise source cannot be changed, this leaves only two remaining parameters for reducing capacitive coupling. The receiver circuit can be operated at a lower resistance level, or capacitance C_{12} can be decreased. Capacitance C_{12} can be decreased by proper orientation of the conductors, by shielding (described in the next section), or by physically separating the conductors. If the conductors are moved farther apart, C_{12} decreases, thus decreasing the induced voltage on conductor 2.* The effect of conductor spacing on capacitive coupling is shown in Fig. 2-2. As a reference, 0 dB is the coupling when the conductors are separated by three times the conductor diameter. As can be seen in the figure, little additional attenuation is gained by spacing the conductors a distance greater than 40 times their diameter (1 in. in the case of 22-gauge wire).

If the resistance from conductor 2 to ground is large, such that

$$R \gg \frac{1}{j\omega(C_{12}+C_{2G})} ,$$

then Eq. 2-1 reduces to

$$V_N = \left(\frac{C_{12}}{C_{12}+C_{2G}}\right) V_1 . \qquad (2\text{-}3)$$

*The capacitance between two parallel conductors of diameter d and spaced D apart is $C_{12} = \pi\epsilon/\cosh^{-1}(D/d)$, (F/m). For $D/d > 3$, this reduces to $C_{12} = \pi\epsilon/\ln(2D/d)$, (F/m), where $\epsilon = 8.85 \times 10^{-12}$ farads per meter (F/m) for free space.

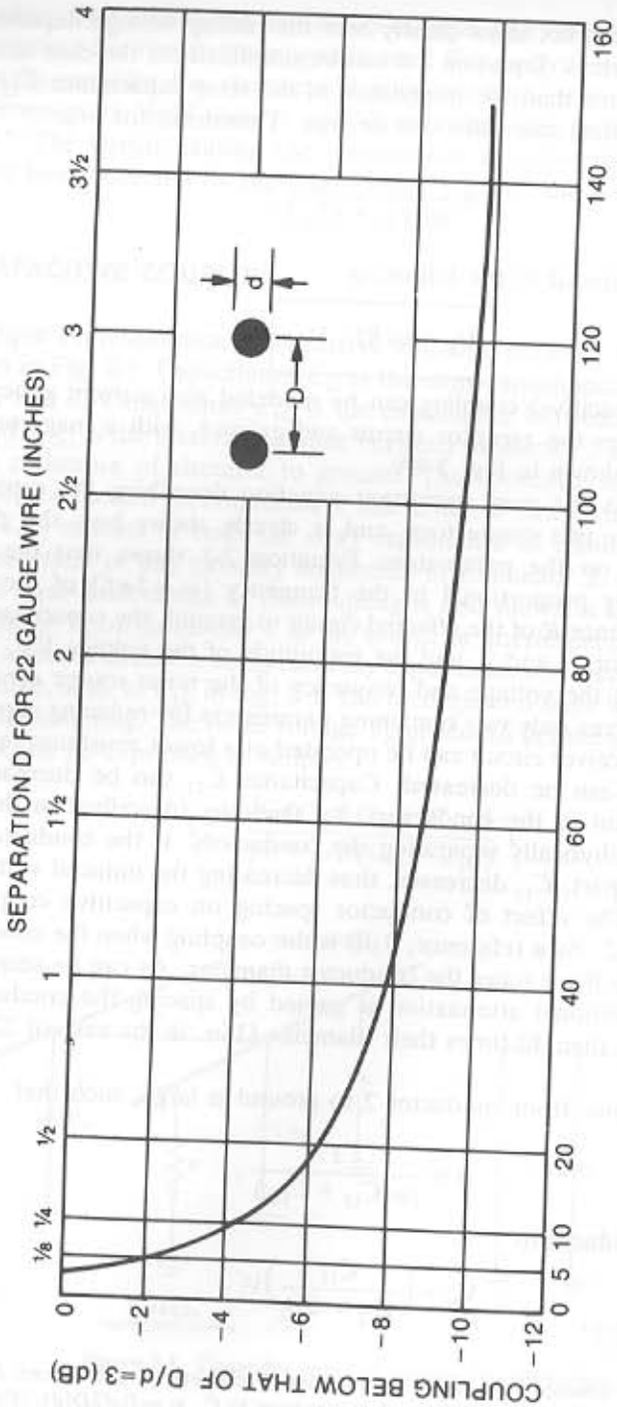

Figure 2-2. *Effect of conductor spacing on capacitive coupling. In the case of 22-gauge wire, most of the attenuation occurs in the first inch of separation.*

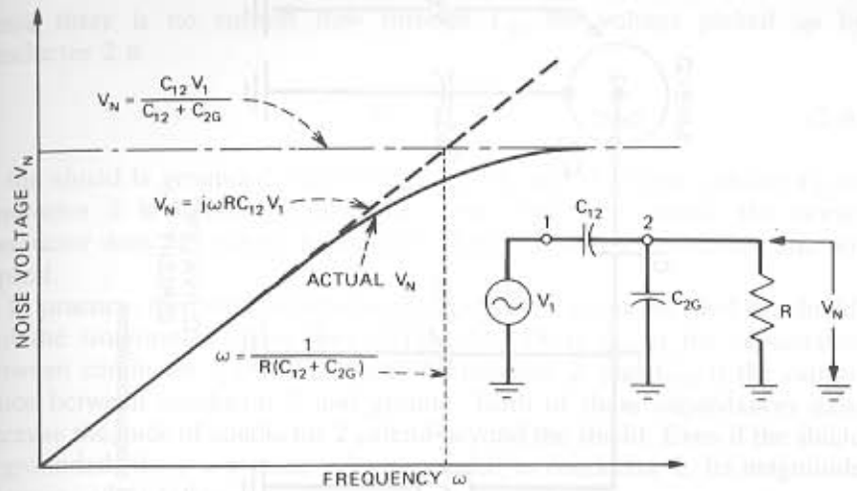

Figure 2-3. *Frequency response of capacitive coupled noise voltage.*

Under this condition the noise voltage produced between conductor 2 and ground is due to the capacitive voltage divider C_{12} and C_{2G}. The noise voltage is independent of frequency and is of a larger magnitude than when R is small.

A plot of Eq. 2-1 versus ω is shown in Fig. 2-3. As can be seen, the maximum noise coupling is given by Eq. 2-3. The figure also shows that the actual noise voltage is always less than or equal to the value given by Eq. 2-2. At a frequency of

$$\omega = \frac{1}{R(C_{12}+C_{2G})}, \tag{2-4}$$

Equation 2-2 gives a value of noise that is 1.41 times the actual value. In almost all practical cases, the frequency is much less than this, and Eq. 2-2 applies.

EFFECT OF SHIELD ON CAPACITIVE COUPLING

First consider the case where the receptor (conductor 2) has infinite resistance to ground. If a shield is placed around conductor 2, the configuration becomes that of Fig. 2-4. An equivalent circuit of the capacitive coupling between conductors is included. The voltage picked up by the shield is

$$V_S = \left(\frac{C_{1S}}{C_{1S}+C_{SG}}\right)V_1 . \tag{2-5}$$

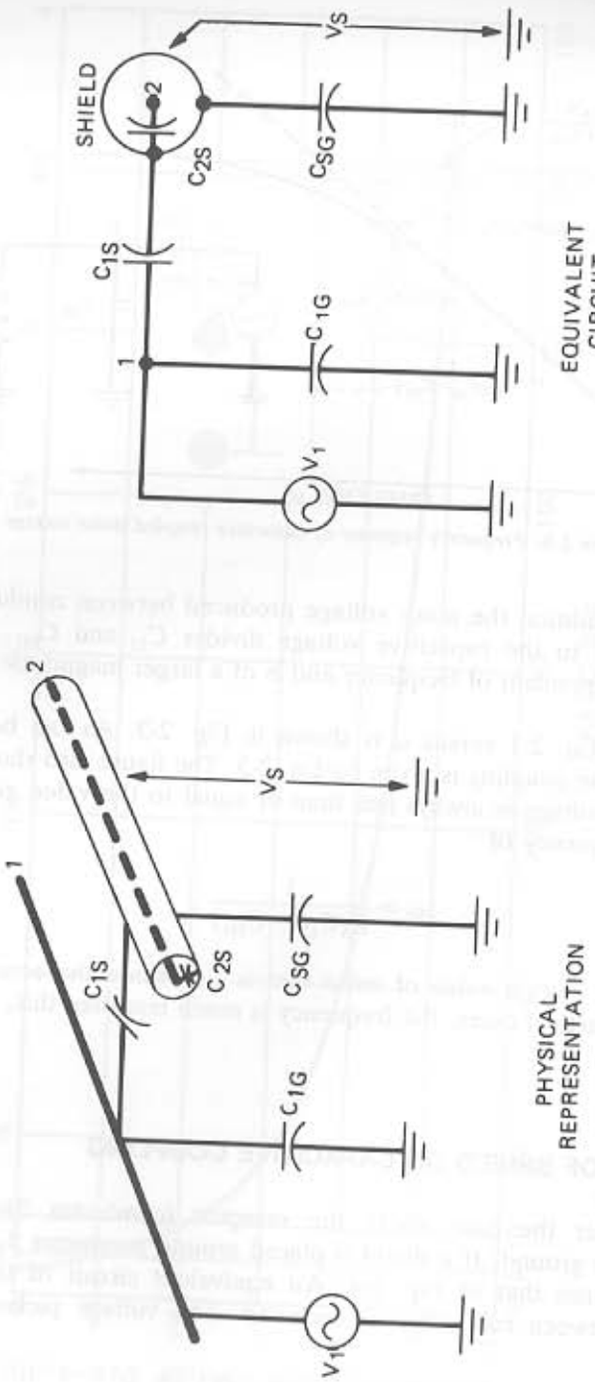

Figure 2-4. *Capacitive coupling with shield placed around receptor conductor.*

Since there is no current flow through C_{2S} the voltage picked up by conductor 2 is

$$V_N = V_S \,. \tag{2-6}$$

If the shield is grounded, the voltage $V_S = 0$, and the noise voltage V_N on conductor 2 is likewise reduced to zero. This case—where the center conductor does not extend beyond the shield—is an ideal situation and not typical.

In practice, the center conductor normally does extend beyond the shield, and the situation becomes that of Fig. 2-5. There C_{12} is the capacitance between conductor 1 and the shielded conductor 2, and C_{2G} is the capacitance between conductor 2 and ground. Both of these capacitances exist because the ends of conductor 2 extend beyond the shield. Even if the shield is grounded, there is a noise voltage coupled to conductor 2. Its magnitude is expressed as follows:

$$V_N = \frac{C_{12}}{C_{12} + C_{2G} + C_{2S}} V_1 \,. \tag{2-7}$$

The value of C_{12}, and hence V_N, in Eq. 2-7 depends on the length of conductor 2 that extends beyond the shield.

For good electric field shielding, it is therefore necessary (1) *to minimize the length of the center conductor that extends beyond the shield and* (2) *to provide a good ground on the shield.* A single ground connection makes a good shield ground, provided the cable is not longer than one-twentieth of a wavelength. On longer cables multiple grounds may be necessary.

If in addition the receiving conductor has finite resistance to ground, the arrangement is that shown in Fig. 2-6. If the shield is grounded, the equivalent circuit can be simplified as shown in the figure. Any capacitance directly across the source can be neglected since it has no effect on the noise coupling. The simplified equivalent circuit can be recognized as the same circuit analyzed in Fig. 2-1, provided C_{2G} is replaced by the sum of C_{2G} and C_{2S}. Therefore, if

$$R \ll \frac{1}{j\omega(C_{12} + C_{2G} + C_{2S})} \,,$$

which is normally true, the noise voltage coupled to conductor 2 is

$$V_N = j\omega R C_{12} V_1 \,. \tag{2-8}$$

This is the same as Eq. 2-2, which is for an unshielded cable, except that C_{12} is greatly reduced by the presence of the shield. Capacitance C_{12} now consists primarily of the capacitance between conductor 1 and the un-

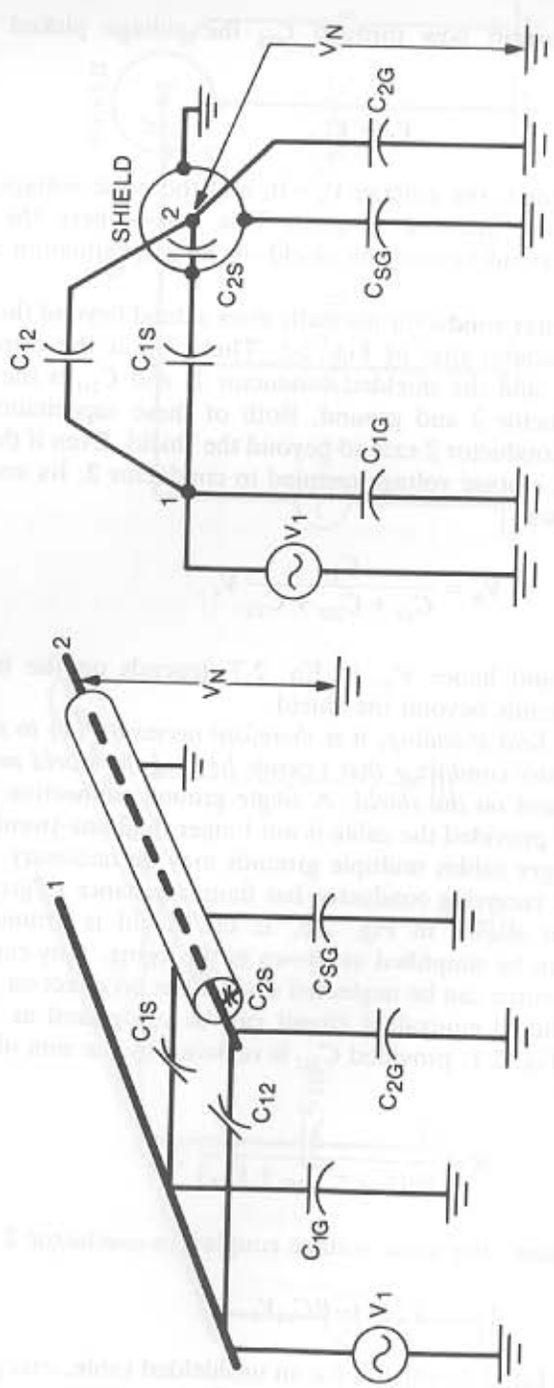

Figure 2-5. *Capacitive coupling when center conductor extends beyond shield; shield grounded at one point.*

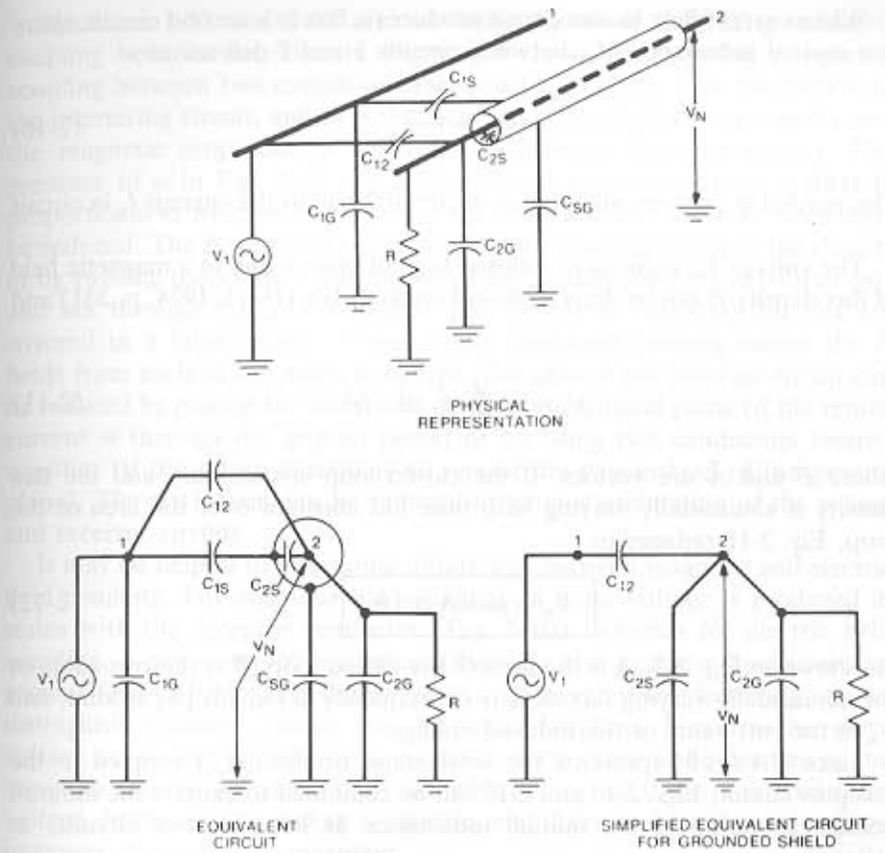

Figure 2-6. *Capacitive coupling when receptor conductor has resistance to ground.*

shielded portions of conductor 2. If the shield is braided, any capacitance that exists from conductor 1 to 2 through the holes in the shield must also be included in C_{12}.

INDUCTIVE COUPLING

When a current I flows in a closed circuit, it produces a magnetic flux ϕ which is proportional to the current. The constant of proportionality is called the inductance L, hence we can write

$$\phi = LI. \tag{2-9}$$

The inductance value depends on the geometry of the circuit and the magnetic properties of the medium containing the field.

When current flow in one circuit produces a flux in a second circuit, there is a mutual inductance M_{12} between circuits 1 and 2 defined as

$$M_{12} = \frac{\phi_{12}}{I_1} . \tag{2-10}$$

The symbol ϕ_{12} represents the flux in circuit 2 due to the current I_1 in circuit 1.

The voltage V_N induced in a closed loop of area $\bar{A}$ due to a magnetic field of flux density $\bar{B}$ can be derived from Faraday's law (Hayt, 1974, p. 331) and is

$$V_N = -\frac{d}{dt}\int_A \bar{B} \cdot d\bar{A} , \tag{2-11}$$

where $\bar{B}$ and $\bar{A}$ are vectors. If the closed loop is stationary and the flux density is sinusoidally varying with time but constant over the area of the loop, Eq. 2-11 reduces to

$$\boxed{V_N = j\omega BA \cos\theta .}^{*} \tag{2-12}$$

As shown in Fig. 2-7, A is the area of the closed loop, B is the rms value of the sinusoidally varying flux density of frequency ω radians per second, and V_N is the rms value of the induced voltage.

Since $BA \cos\theta$ represents the total magnetic flux (ϕ_{12}) coupled to the receptor circuit, Eqs. 2-10 and 2-12 can be combined to express the induced voltage in terms of the mutual inductance M between two circuits, as follows:

$$V_N = j\omega M I_1 = M\frac{di_1}{dt} . \tag{2-13}$$

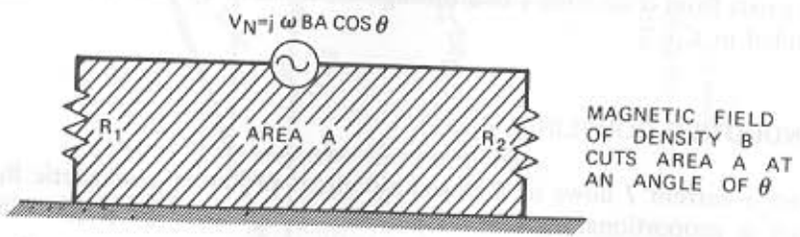

Figure 2-7. *Induced noise depends on the area enclosed by the disturbed circuit.*

*Equation 2-12 is correct when the MKS system of units is being used. Flux density B is in webers per square meter (or tesla), and area A is in square meters. If B is expressed in gauss and A is in square centimeters (the CGS system), the right side of Eq. 2-12 must be multiplied by 10^{-8}.

Equations 2-12 and 2-13 are the basic equations describing inductive coupling between two circuits. Figure 2-8 shows the inductive (magnetic) coupling between two circuits as described by Eq. 2-13. I_1 is the current in the interfering circuit, and M is the term that accounts for the geometry and the magnetic properties of the medium between the two circuits. The presence of ω in Eqs. 2-12 and 2-13 indicates that the coupling is directly proportional to frequency. To reduce the noise voltage, B, A, or $\cos\theta$ must be reduced. The B term can be reduced by physical separation of the circuits or by twisting the source wires, provided the current flows in the twisted pair and not through the ground plane. The conditions necessary for this are covered in a later section. Under these conditions twisting causes the B fields from each of the wires to cancel. The area of the receiver circuit can be reduced by placing the conductor closer to the ground plane (if the return current is through the ground plane) or by using two conductors twisted together (if the return current is on one of the pair instead of the ground plane). The $\cos\theta$ term can be reduced by proper orientation of the source and receiver circuits.

It may be helpful to note some differences between magnetic and electric field coupling. For magnetic field coupling, a noise voltage is produced in series with the receptor conductor (Fig. 2-9B), whereas for electric field coupling, a noise current is produced between the receptor conductor and ground (Fig. 2-9A). This difference can be used in the following test to distinguish between electric and magnetic coupling. Measure the noise voltage across the impedance at one end of the cable while decreasing the impedance at the opposite end of the cable (Fig. 2-9). If the measured noise voltage decreases, the pickup is electric, and if the measured noise voltage increases, the pickup is magnetic.

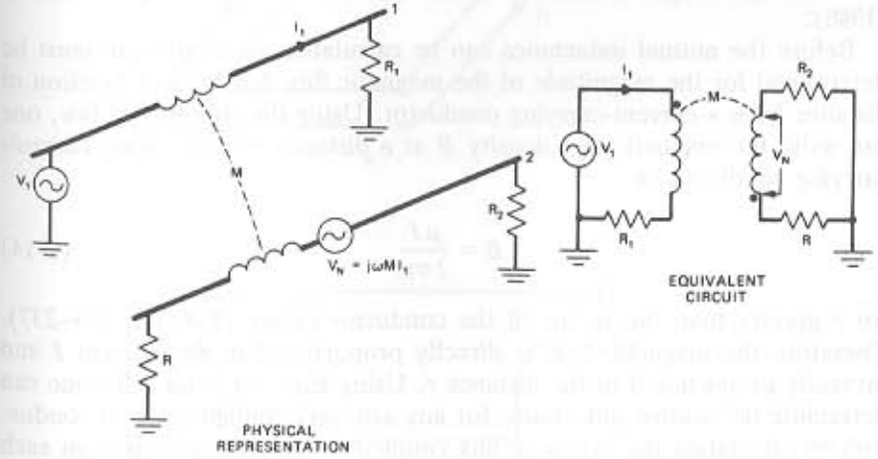

Figure 2-8. *Magnetic coupling between two circuits.*

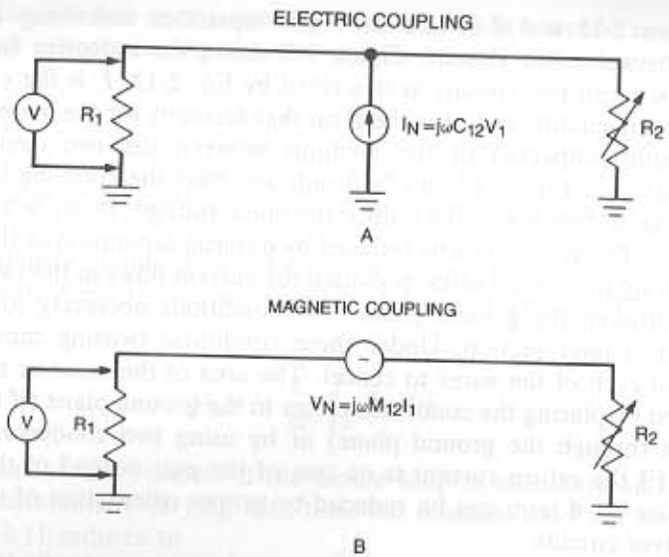

Figure 2-9. *(A) Equivalent circuit for electric field coupling; (B) equivalent circuit for magnetic field coupling.*

MUTUAL INDUCTANCE CALCULATIONS

To evaluate the expression in Eq. 2-13, the mutual inductance between the source and receptor circuit must be known. Most texts do not pay much attention to mutual inductance calculations for practical circuit geometries. Grover (1973), however, provides an extensive treatment of the subject, and Ruehli (1972) develops the useful concept of partial mutual inductance. This concept of partial mutual inductance is further developed in Paul (1986).

Before the mutual inductance can be calculated, an expression must be determined for the magnitude of the magnetic flux density as a function of distance from a current-carrying conductor. Using the Biot-Savart law, one can write the magnetic flux density B at a distance r from a long current-carrying conductor as

$$B = \frac{\mu I}{2\pi r}, \tag{2-14}$$

for r greater than the radius of the conductor (Hayt 1974, pp. 235–237). Therefore the magnetic field is directly proportional to the current I and inversely proportional to the distance r. Using Eqs. 2-14 and 2-10, one can determine the mutual inductance for any arbitrary configuration of conductors by calculating the magnetic flux coupled to the pickup loop from each current-carrying conductor individually, and then superimposing all the results to obtain the total flux coupling.

Example 2.1. Calculate the mutual inductance between the two nested coplaner loops shown in Fig. 2-10A, assuming that the sides of the loop are much longer than the ends (i.e., the coupling contributed by the end conductors can be neglected). Conductors 1 and 2 are carrying a current I_1 which induces a voltage V_N into the loop formed by conductors 3 and 4. Figure 2-10B is a cross-sectional view showing the spacing between the conductors. The magnetic flux produced by the current in conductor 1 crossing the loop between conductors 3 and 4 is

$$\theta_{12} = \int_a^b \frac{\mu I_1}{2\pi r}\, dr = \frac{\mu I_1}{2\pi} \ln\left(\frac{b}{a}\right). \tag{2-15}$$

Conductor 2 also contributes an equal flux due to the symmetry of the conductors. This flux is in the same direction as the flux produced by the current in conductor 1. Therefore the total flux coupled to the loop formed by conductors 3 and 4 is twice that given by Eq. 2-15, or

$$\theta_{12} = \left[\frac{\mu}{\pi} \ln\left(\frac{b}{a}\right)\right] I_1. \tag{2-16}$$

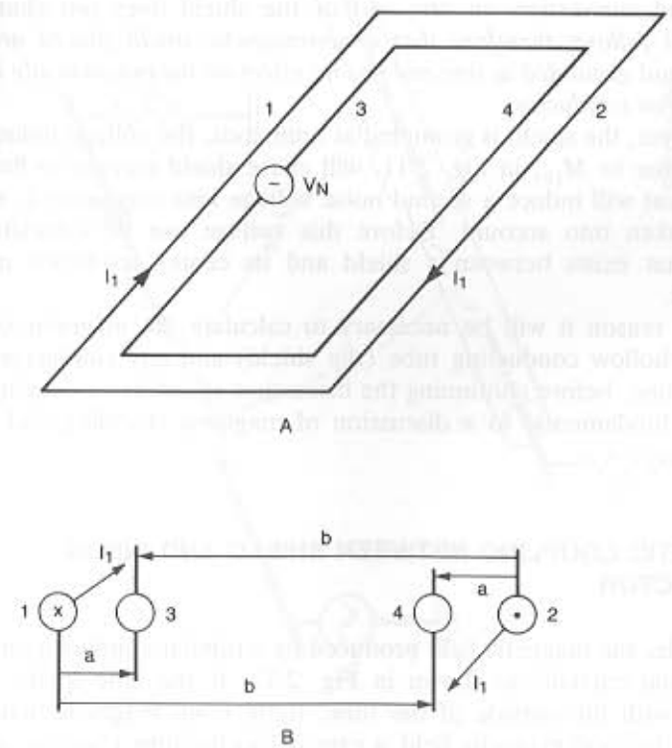

Figure 2-10. *(A) Nested coplanar loops; (B) cross-sectional view of A.*

Dividing Eq. 2-16 by I_1 and substituting $4\pi \times 10^{-7}$ H/m for μ, we obtain as the mutual inductance

$$M = 4 \times 10^{-7} \ln\left(\frac{b}{a}\right). \tag{2-17}$$

The voltage coupled between the two loops can be calculated by substituting the result from Eq. 2-17 into Eq. 2-13.

EFFECT OF SHIELD ON MAGNETIC COUPLING

If an ungrounded and nonmagnetic shield is now placed around conductor 2, the circuit becomes that of Fig. 2-11, where M_{1S} is the mutual inductance between conductor 1 and the shield. Since the shield has no effect on the geometry or magnetic properties of the medium between circuits 1 and 2, it has no effect on the voltage induced into conductor 2. The shield does, however, pick up a voltage due to the current in conductor 1:

$$V_S = j\omega M_{1S} I_1 . \tag{2-18}$$

A ground connection on one end of the shield does not change the situation. *It follows therefore that a nonmagnetic shield placed around a conductor and grounded at one end has no effect on the magnetically induced voltage in that conductor.*

If, however, the shield is grounded at both ends, the voltage induced into the shield due to M_{1S}, in Fig. 2-11, will cause shield current to flow. The shield current will induce a second noise voltage into conductor 2, and this must be taken into account. Before this voltage can be calculated, the coupling that exists between a shield and its center conductor must be determined.

For this reason it will be necessary to calculate the magnetic coupling between a hollow conducting tube (the shield) and any conductor placed inside the tube, before continuing the discussion of inductive coupling. This concept is fundamental to a discussion of magnetic shielding and will be needed later.

MAGNETIC COUPLING BETWEEN SHIELD AND INNER CONDUCTOR

First consider the magnetic field produced by a tubular conductor carrying a *uniform* axial current, as shown in Fig. 2-12. If the hole in the tube is concentric with the outside of the tube, there is no magnetic field in the cavity and the total magnetic field is external to the tube (Smythe, p. 278).

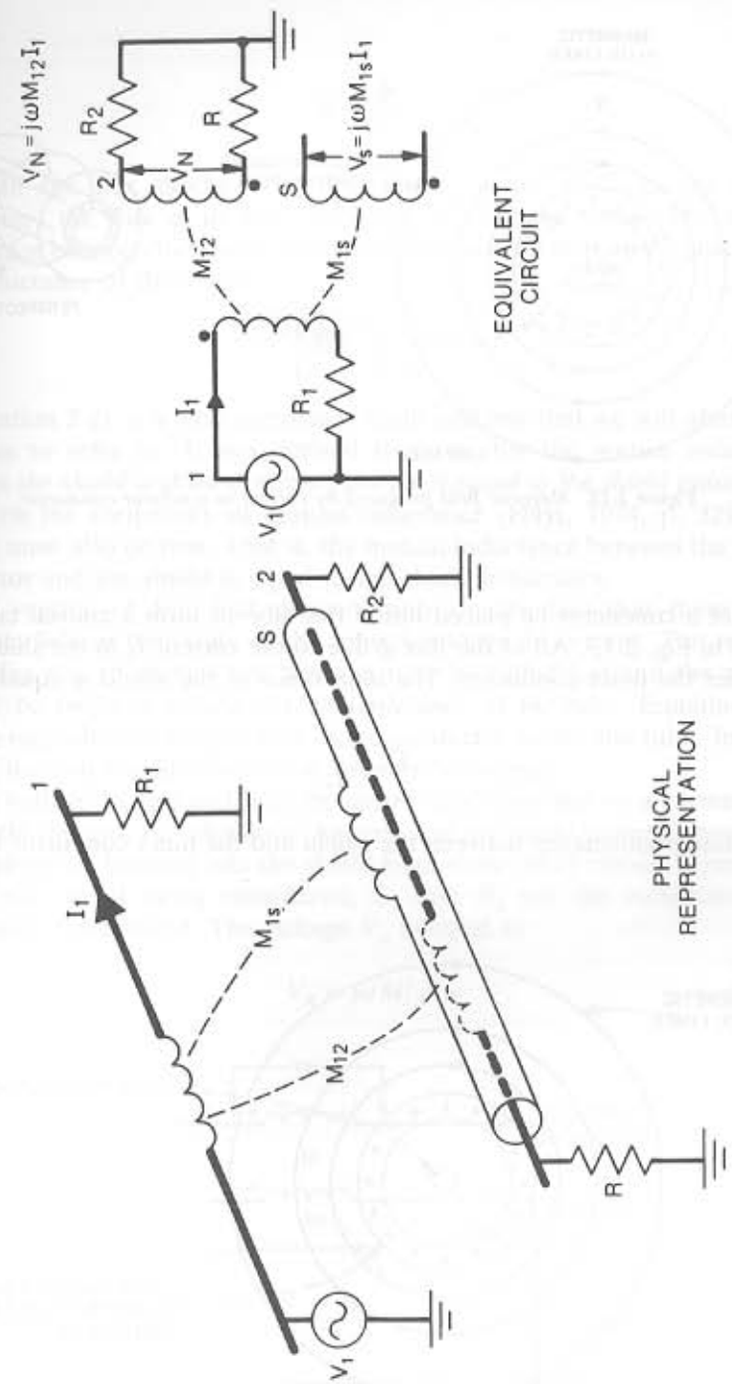

Figure 2-11. *Magnetic coupling when a shield is placed around the receptor conductor.*

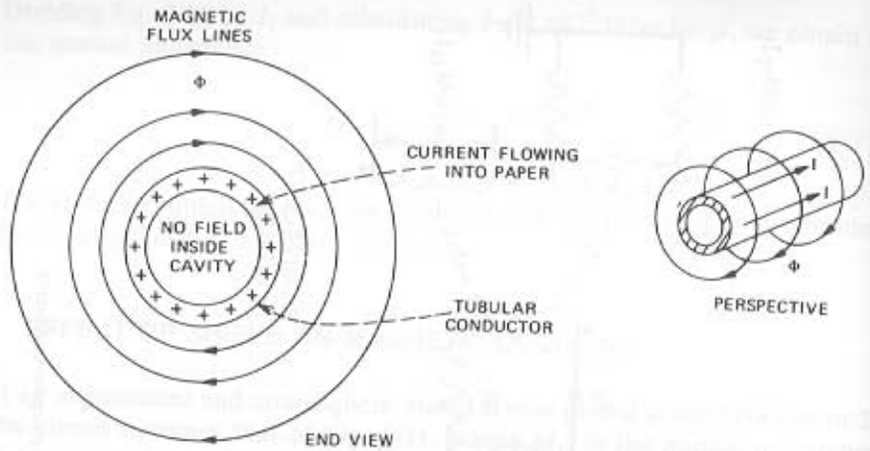

Figure 2-12. *Magnetic field produced by current in a tubular conductor.*

Now let a conductor be placed inside the tube to form a coaxial cable, as shown in Fig. 2-13. All of the flux ϕ due to the current I_S in the shield tube encircles the inner conductor. The inductance of the shield is equal to

$$L_S = \frac{\phi}{I_S}. \tag{2-19}$$

The mutual inductance between the shield and the inner conductor is equal

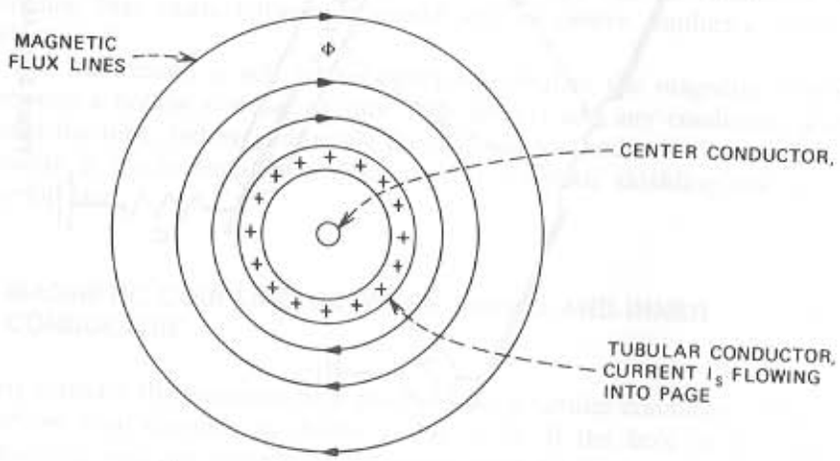

Figure 2-13. *Coaxial cable with shield current flowing.*

to

$$M = \frac{\phi}{I_S}. \tag{2-20}$$

Since all the flux produced by the shield current encircles the center conductor, the flux ϕ in Eqs. 2-19 and 2-20 is the same. The mutual inductance between the shield and center conductor is therefore equal to the self inductance of the shield

$$\boxed{M = L_S.} \tag{2-21}$$

Equation 2-21 is a most important result and one that we will often have occasion to refer to. It was derived to show that the *mutual inductance between the shield and the center conductor is equal to the shield inductance.* Based on the reciprocity of mutual inductance (Hayt, 1974, p. 321), the inverse must also be true. That is, the mutual inductance between the center conductor and the shield is equal to the shield inductance.

The validity of Eq. 2-21 depends only on the fact that there is no magnetic field in the cavity of the tube due to shield current. The requirements for this to be true are that the tube be cylindrical and the current density be *uniform around the circumference of the tube.* Equation 2-21 applies regardless of the position of the conductor within the tube. In other words, the two conductors do not have to be coaxial.

The voltage V_N induced into the center conductor due to a current I_S in the shield can now be calculated. Assume that the shield current is produced by a voltage V_S induced into the shield from some other circuit. Figure 2-14 shows the circuit being considered; L_S and R_S are the inductance and resistance of the shield. The voltage V_N is equal to

$$V_N = j\omega M I_S. \tag{2-22}$$

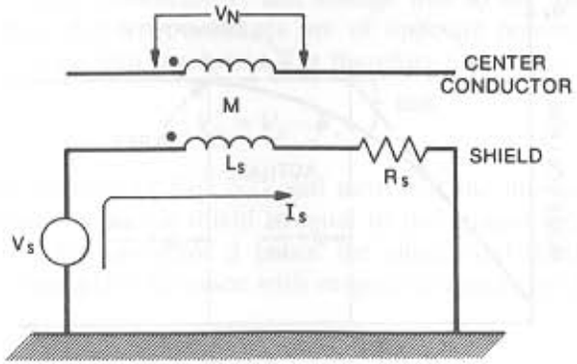

Figure 2-14. *Equivalent circuit of shielded conductor.*

The current I_S is equal to

$$I_S = \frac{V_S}{L_S}\left(\frac{1}{j\omega + R_S/L_S}\right). \tag{2-23}$$

Therefore

$$V_N = \left(\frac{j\omega M V_S}{L_S}\right)\left(\frac{1}{j\omega + R_S/L_S}\right). \tag{2-24}$$

Since $L_S = M$ (from Eq. 2-21),

$$V_N = \left(\frac{j\omega}{j\omega + R_S/L_S}\right)V_S. \tag{2-25}$$

A plot of Eq. 2-25 is shown in Fig. 2-15. The break frequency for this curve is defined as the shield cutoff frequency (ω_c) and occurs at

$$\omega_c = \frac{R_S}{L_S}, \quad \text{or} \quad f_c = \frac{R_S}{2\pi L_S}. \tag{2-26}$$

The noise voltage induced into the center conductor is zero at dc and increases to almost V_S at a frequency of $5R_S/L_S$ rad/s. Therefore, if shield current is allowed to flow, a voltage is induced into the center conductor that nearly equals the shield voltage at frequencies greater than five times the shield cutoff frequency.

This is a very important property of a conductor inside a shield. Measured values of the shield cutoff frequency and five times this frequency are tabulated in Table 2-1 for various cables. For most cables, five times the shield cutoff frequency is near the high end of the audio-frequency band. The aluminum-foil-shielded cable listed has a much higher shield cutoff

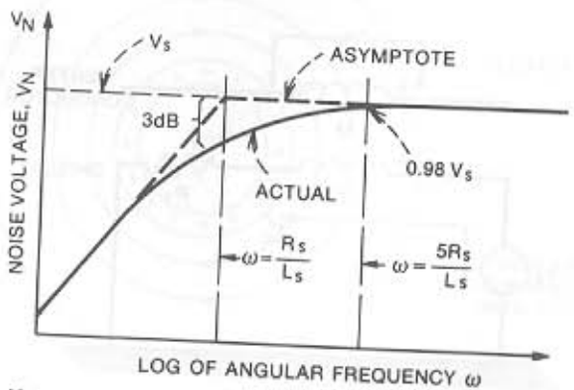

Figure 2-15. *Noise voltage in center conductor of coaxial cable due to shield current.*

Table 2-1 Measured Values of Shield Cutoff Frequency (f_c)

Cable	Impedance (Ω)	Cutoff Frequency (kHz)	Five Times Cutoff Frequency (kHz)	Remarks
Coaxial cable				
RG-6A	75	0.6	3.0	Double shielded
RG-213	50	0.7	3.5	
RG-214	50	0.7	3.5	Double shielded
RG-62A	93	1.5	7.5	
RG-59C	75	1.6	8.0	
RG-58C	50	2.0	10.0	
Shielded twisted pair				
754E	125	0.8	4.0	Double shielded
24 Ga.	—	2.2	11.0	
22 Ga.[a]	—	7.0	35.0	Aluminum-foil shield
Shielded single				
24 Ga.	—	4.0	20.0	

[a]One pair out of an 11-pair cable (Belden 8775).

frequency than any other. This is due to the increased resistance of its thin aluminum-foil shield.

Magnetic Coupling—Open Wire to Shielded Conductor

Figure 2-16 shows the magnetic couplings that exist when a nonmagnetic shield is placed around conductor 2 and the shield is grounded at both ends. In this figure the shield conductor is shown separated from conductor 2 to simplify the drawing. Since the shield is grounded at both ends, the shield current flows and induces a voltage into conductor 2. Therefore there are two components of the voltage induced into conductor 2: voltage due to direct induction from conductor 1, and voltage due to the induced shield current. Note that these two voltages are of opposite polarity. The total noise voltage induced into conductor 2 is therefore

$$V_N = V_2 - V_c. \tag{2-27}$$

If we use the identity of Eq. 2-21 and note that the mutual inductance M_{1S} from conductor 1 to the shield is equal to the mutual inductance M_{12} from conductor 1 to conductor 2 (since the shield and conductor 2 are located in the same place in space with respect to conductor 1), Eq. 2-27 becomes

$$V_N = j\omega M_{12} I_1 \left[\frac{R_S/L_S}{j\omega + R_S/L_S}\right]. \tag{2-28}$$

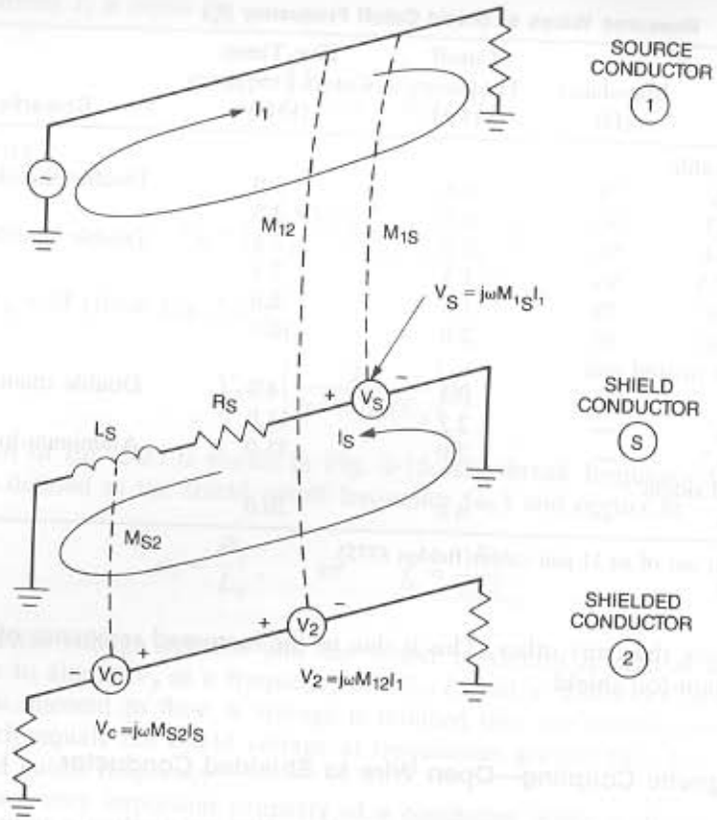

Figure 2-16. *Magnetic coupling to a shielded cable with the shield grounded at both ends.*

If ω is small in Eq. 2-28, the term in brackets equals 1, and the noise voltage is the same as for the unshielded cable. If ω is large, Eq. 2-28 reduces to

$$V_N = M_{12} I_1 \left(\frac{R_S}{L_S}\right). \tag{2-29}$$

Equation 2-28 is plotted in Fig. 2-17. At low frequencies the noise pickup in the shielded cable is the same as for an unshielded cable; however, at frequencies above the shield cutoff frequency the pickup voltage stops increasing and remains constant. The shielding effectiveness (shown cross-hatched in Fig. 2-17) is therefore equal to the difference between the curve for the unshielded cable and for the shielded cable.

Figure 2-18 shows a transformer analogy equivalent circuit for the configuration of Fig. 2-16. As can be seen, the shield acts as a shorted turn in the transformer to short out the voltage in winding 2.

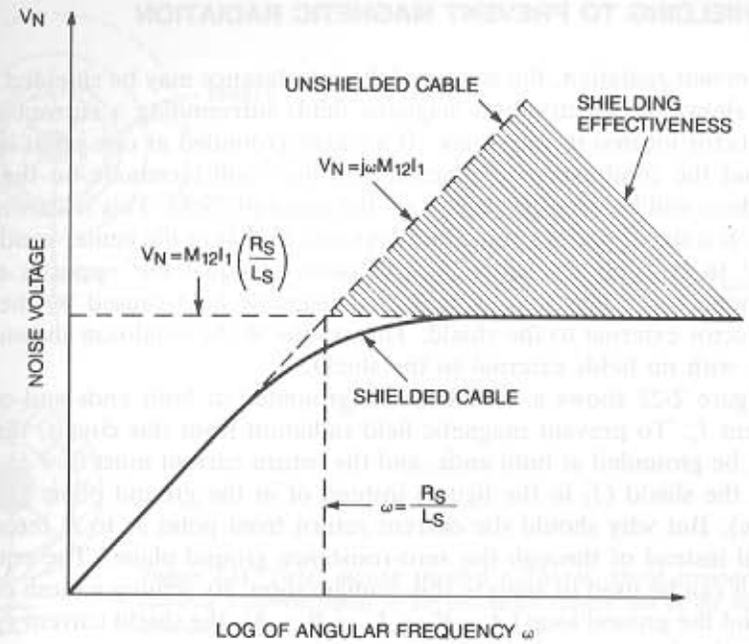

Figure 2-17. *Magnetic field coupled noise voltage for an unshielded and shielded cable (shield grounded at both ends) versus frequency.*

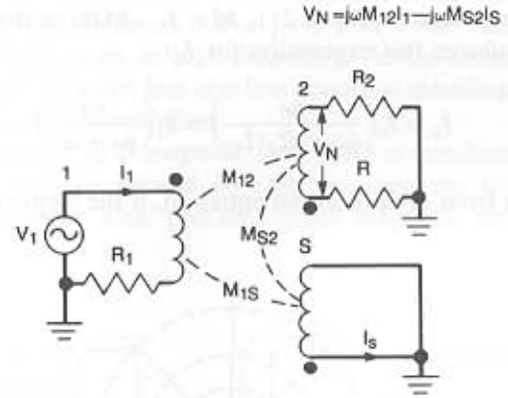

Figure 2-18. *Transformer analogy of magnetic field coupling to a shielded cable when shield is grounded at both ends (M_{S2} is much larger than M_{12} or M_{1S}).*

SHIELDING TO PREVENT MAGNETIC RADIATION

To prevent radiation, the source of the interference may be shielded. Figure 2-19 shows the electric and magnetic fields surrounding a current-carrying conductor located in free space. If a shield grounded at one point is placed around the conductor, the electric field lines will terminate on the shield, but there will be very little effect on the magnetic field. This is shown in Fig. 2-20. If a shield current equal and opposite to that in the center conductor is made to flow on the shield, it generates an equal but opposite external magnetic field. This field cancels the magnetic field caused by the center conductor external to the shield. This results in the condition shown in Fig. 2-21, with no fields external to the shield.

Figure 2-22 shows a circuit that is grounded at both ends and carries a current I_1. To prevent magnetic field radiation from this circuit, the shield must be grounded at both ends, and the return current must flow from A to B in the shield (I_S in the figure) instead of in the ground plane (I_G in the figure). But why should the current return from point A to B through the shield instead of through the zero-resistance ground plane? The equivalent circuit can be used to analyze this configuration. By writing a mesh equation around the ground loop ($A - R_S - L_S - B - A$), the shield current I_S can be determined:

$$0 = I_S(j\omega L_S + R_S) - I_1(j\omega M), \tag{2-30}$$

where M is the mutual inductance between the shield and center conductor and as previously shown (Eq. 2-21), $M = L_S$. Making this substitution and rearranging produces this expression for I_S:

$$I_S = I_1\left(\frac{j\omega}{j\omega + R_S/L_S}\right) = I_1\left(\frac{j\omega}{j\omega + \omega_c}\right). \tag{2-31}$$

As can be seen from the preceding equation, if the frequency is much above

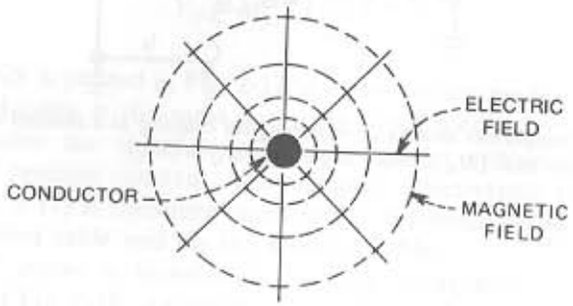

Figure 2-19. *Fields around a current-carrying conductor.*

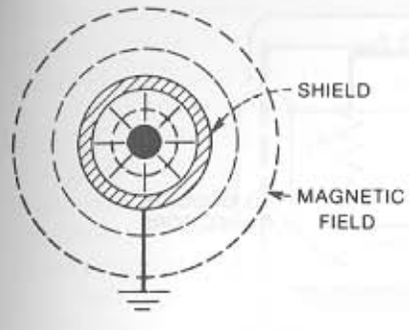

Figure 2-20. *Fields around shielded conductor; shield grounded at one point.*

Figure 2-21. *Fields around shielded conductor; shield grounded and carrying a current equal to the conductor current but in the opposite direction.*

the shield cutoff frequency ω_c, the shield current approaches the center conductor current. Because of the mutual inductance between the shield and center conductor, a coaxial cable acts a common-mode choke (see Chapter 3), and the shield provides a return path with lower total circuit inductance than the ground plane at high frequency. As the frequency decreases below $5\omega_c$, the cable provides less and less magnetic shielding as more of the current returns via the ground plane.

To prevent radiation of a magnetic field from a conductor grounded at both ends, the conductor should be shielded, and the shield should be grounded at both ends. This provides good magnetic field shielding at

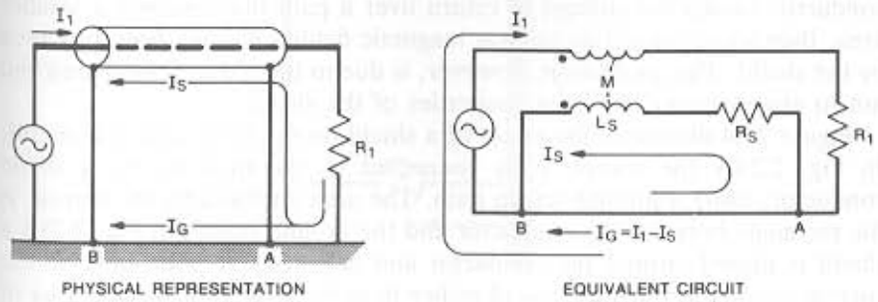

Figure 2-22. *Division of current between shield and ground plane.*

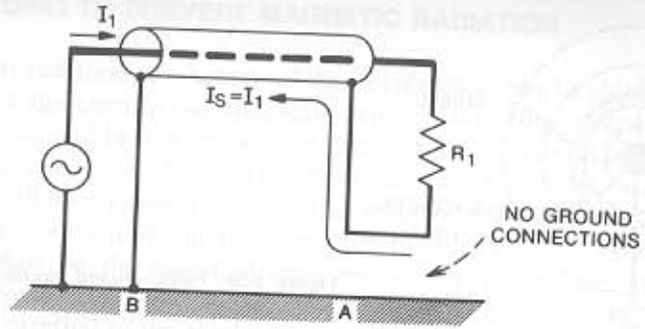

Figure 2-23. *Without ground at far end, all return current flows through shield.*

frequencies considerably above the shield cutoff frequency. This reduction in the radiated magnetic field is not because of the magnetic shielding properties of the shield as such. Rather, the return current on the shield generates a field that cancels the conductor's field.

If the ground is removed from one end of the *circuit*, as shown in Fig. 2-23, then the shield should not be grounded at that end since the return current must now all flow on the shield. This is true especially at frequencies less than the shield cutoff frequency. Grounding both ends of the shield, in this case, reduces the shielding since some current would return via the ground plane.

SHIELDING A RECEPTOR AGAINST MAGNETIC FIELDS

The best way to protect against magnetic fields at the receptor is to decrease the area of the receptor loop. The area of interest is the total area enclosed by current flow in the receptor circuit. An important consideration is the path taken by the current in returning to the source. Quite often the current returns by a path other than the one intended by the designer, and therefore the area of the loop changes. If a nonmagnetic shield placed around a conductor causes the current to return over a path that encloses a smaller area, then some protection against magnetic fields will have been provided by the shield. This protection, however, is due to the reduced loop area and not to any magnetic shielding properties of the shield.

Figure 2-24 illustrates the effect of a shield on the loop area of a circuit. In Fig. 2.24A the source V_s is connected to the load R_L by a single conductor, using a ground return path. The area enclosed by the current is the rectangle between the conductor and the ground plane. In Fig. 2-24B a shield is placed around the conductor and grounded at both ends. If the current returns through the shield rather than the ground plane, the area of the loop is decreased, and a degree of magnetic protection is provided. The

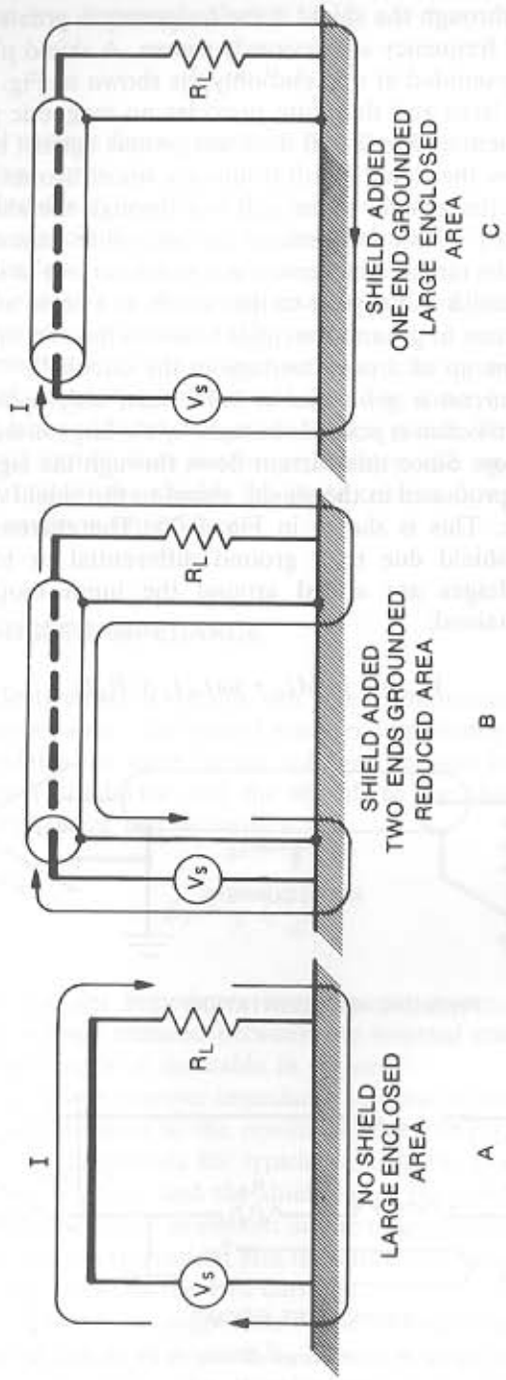

Figure 2-24. *Effect of shield on receptor loop area.*

current returns through the shield if the frequency is greater than five times the shield cutoff frequency as previously shown. A shield placed around the conductor and grounded at one end only, as shown in Fig. 2-24C, does not change the loop area and therefore provides no magnetic protection.

The arrangement of Fig. 2-24B does not protect against magnetic fields at frequencies below the shield cutoff frequency since then most of the current returns through the ground plane and not through the shield. This circuit should be avoided at low frequencies for two other reasons: (1) since the shield is one of the circuit conductors, any noise current in it will produce an *IR* drop in the shield and appear to the circuit as a noise voltage, and (2) if there is a difference in ground potential between the two ends of the shield, this too will show up as a noise voltage in the circuit.*

Whenever a circuit is grounded at both ends, only a limited amount of magnetic field protection is possible because of the large noise current induced in the ground loop. Since this current flows through the signal conductor, a noise voltage is produced in the shield, equal to the shield current times the shield resistance. This is shown in Fig. 2-25. The current I_S is the noise current in the shield due to a ground differential or to external noise coupling. If voltages are added around the input loop, the following expression is obtained:

$$V_{IN} = -j\omega M I_S + j\omega L_S I_S + R_S I_S \,. \tag{2-32}$$

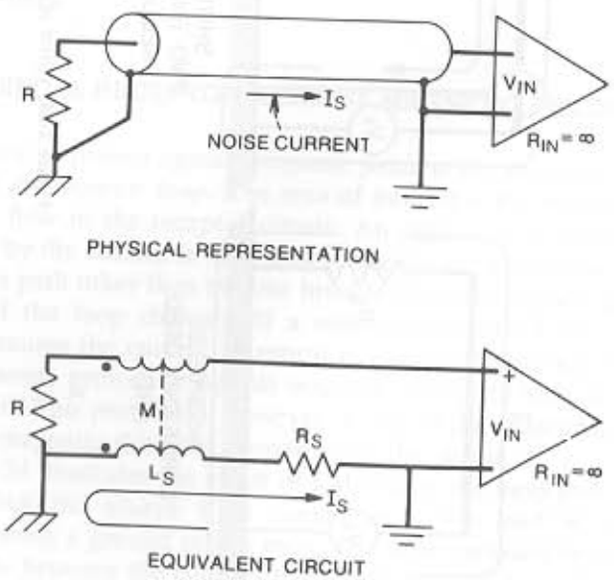

Figure 2-25. *Effect of noise current flowing in the shield of a coaxial cable.*

*See Chapter 3, for further discussion of a shielded cable grounded at both ends.

Since $L_S = M$, as was previously shown

$$V_{IN} = R_S I_S \,. \tag{2-33}$$

Whenever shield current flows, a noise voltage is produced in the shield due to the $I_S R_S$ voltage drop.

Even if the shield is grounded at only one end, shield noise currents may still flow due to capacitive coupling to the shield. *Therefore, for maximum noise protection at low frequencies, the shield should not be one of the signal conductors, and one end of the circuit must be isolated from ground.*

At high frequencies a coaxial cable contains three isolated conductors: (1) the center conductor, (2) the inner surface of the shield conductor, and (3) the outer surface of the shield conductor. The inner and outer surfaces of the shield are isolated from each other by skin effect. Therefore the noise coupling discussed earlier does not occur; because the signal current flows on the inside surface of the shield, the noise current flows on the outside, and there is no common impedance.

SHIELD TRANSFER IMPEDANCE

The shielding effectiveness of a cable can also be expressed in terms of the shield transfer impedance. The shield transfer impedance is a property of the shield that relates the open circuit voltage (per unit length) developed between the center conductor and the shield, to the shield current. The shield transfer impedance can be written as

$$Z_T = \frac{1}{I_S}\left(\frac{dV}{dl}\right), \tag{2-34}$$

where Z_T is the transfer impedance in ohms per meter, I_S is the shield current, V is the voltage induced between the internal conductors and the shield, and l is the length of the cable in meters.

At low frequencies the transfer impedance is equal to the dc resistance of the shield. This is equivalent to the results obtained in Eq. 2-33. At higher frequencies (above a megahertz for typical cables), the transfer impedance decreases due to skin effect, and the shielding of the cable increases. Skin effect causes the noise current to remain on the outside surface of the shield, and the signal current on the inside, and therefore it eliminates the common impedance coupling between the two currents.

Figure 2-26 is a plot of the magnitude of the transfer impedance (normalized to the value of the dc resistance R_{dc}) for a *solid* tubular shield. If the shield is braided, not solid, the transfer impedance will increase with frequency above about 1 MHz, as shown in Fig. 2-32.

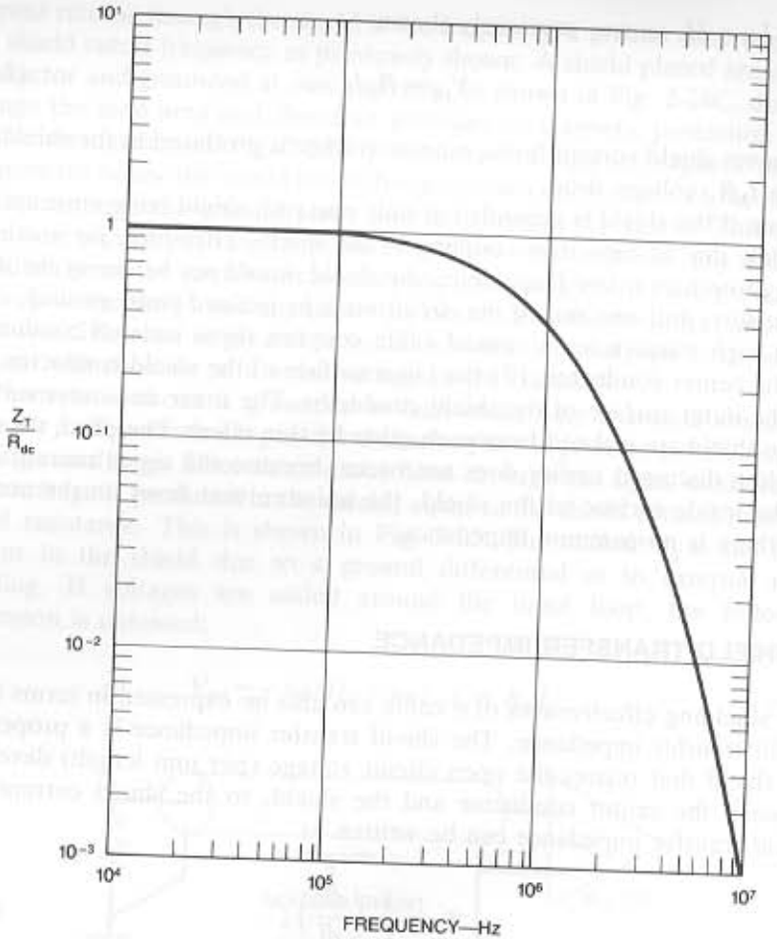

Figure 2-26. *Magnitude of normalized transfer impedance for a solid shield.*

EXPERIMENTAL DATA

The magnetic field shielding properties of various cable configurations were measured and compared. The test setup is shown in Fig. 2-27, and the test results are tabulated in Figs. 2-28 and 2-29. The frequency (50 kHz) is greater than five times the shield cutoff frequency for all the cables tested. The cables shown in Figs. 2-28 and 2-29 represent tests cables shown as *L2* in Fig. 2-27.

In circuits *A* through *F* (Fig. 2-28), both ends of the circuit are grounded. They provide much less magnetic field attenuation than do circuits *G* through *K* (Fig. 2-29), where only one end is grounded.

Circuit *A* in Fig. 2-28 provides essentially no magnetic field shielding. The

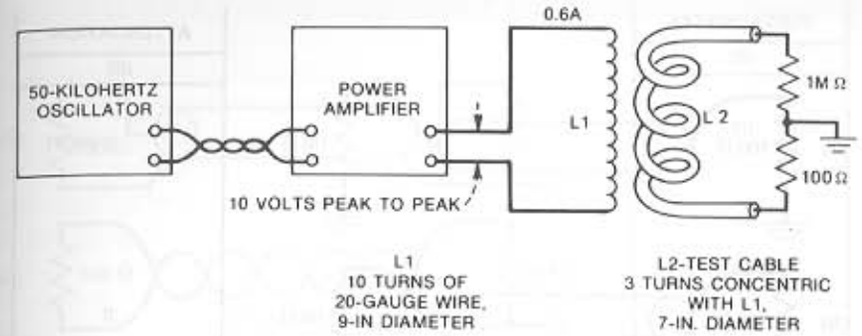

Figure 2-27. *Test setup of inductive coupling experiment.*

actual noise voltage measured across the one megohm resistor in this case was 0.8 V. The pickup in configuration *A* is used as a reference and is called 0 dB, to compare the performance of all the other circuits. In circuit *B*, the shield is grounded at one end; this has no effect on the magnetic shielding. Grounding the shield at both ends as in configuration *C* provides some magnetic field protection because the frequency is above the shield cutoff frequency. The protection would be even greater if it were not for the ground loop formed by grounding both ends of the circuit. The magnetic field induces a large noise current into the low-impedance ground loop consisting of the cable shield and the two ground points. The shield noise current then produces a noise voltage in the shield, as was shown in the preceding section.

Use of a twisted pair as in circuit *D* should provide much greater magnetic field noise reduction, but its effect is defeated by the ground loop formed by circuit grounds at both ends. This can clearly be seen by comparing the attenuation of circuit *H* to that of circuit *D*. Adding a shield with one end grounded, to the twisted pair as in *E* has no effect. Grounding the shield at both ends as in *F* provides additional protection, since the low-impedance shield shunts some of the magnetically induced ground-loop current away from the signal conductors. In general, however, none of the circuit configurations in Fig. 2-28 provide good magnetic field protection because of the ground loops. If the circuit must be grounded at both ends, configurations *C* or *F* should be used.

Circuit *G* shows a significant improvement in magnetic field shielding. This is due to the very small loop area formed by the coaxial cable and the fact that there is no ground loop to defeat the shielding. The coax provides a very small loop area since the shield can be represented by an equivalent conductor located on its center axis. This effectively locates the shield at or very near the axis of the center conductor.

It was expected that the twisted pair of circuit *H* would provide considerably more shielding than the 55 dB shown. The reduced shielding is due to

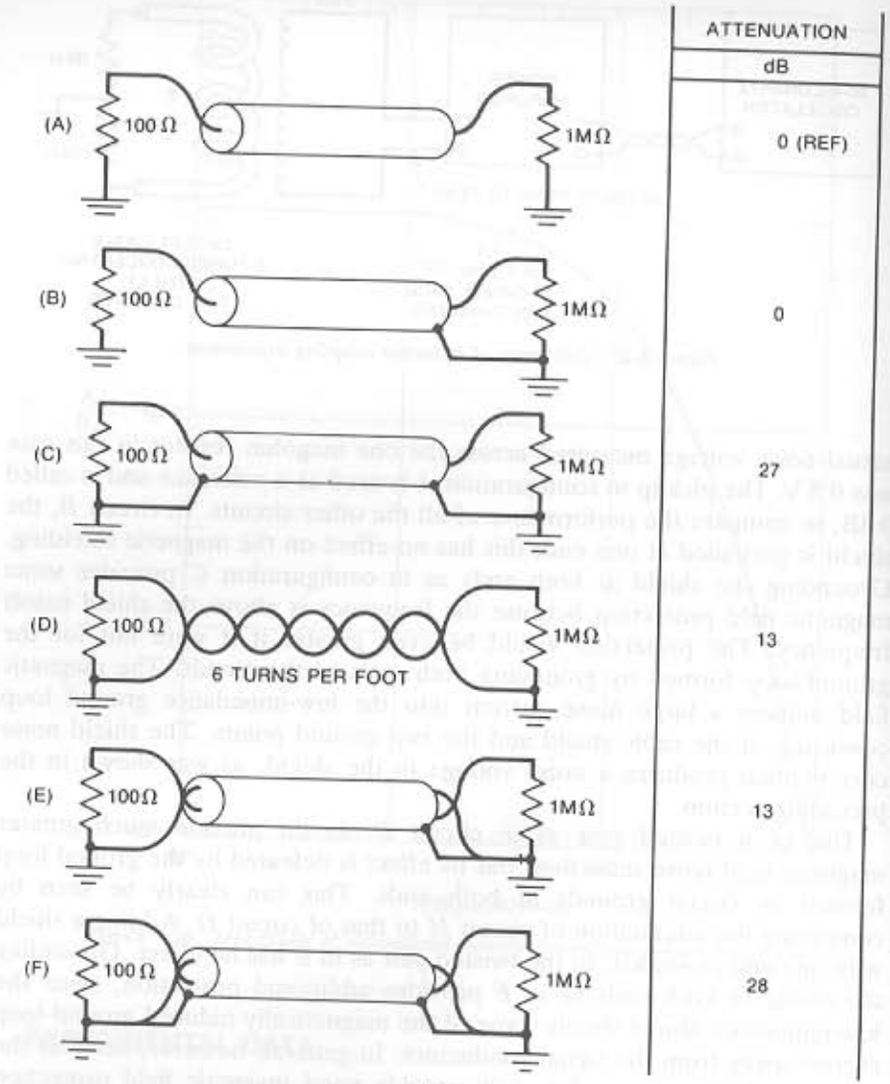

Figure 2-28. *Results of inductive coupling experiment; all circuits grounded at both ends.*

the fact that some electric field coupling is now beginning to show up. This can be seen in circuit *I*, where attenuation increases to 70 dB by placing a shield around the twisted pair. The fact that attenuation in circuit *G* is better than in *I* indicates that in this case the particular coaxial cable presents a smaller loop area to the magnetic field than does the twisted pair. This, however, is not necessarily true in general. Increasing the number of turns

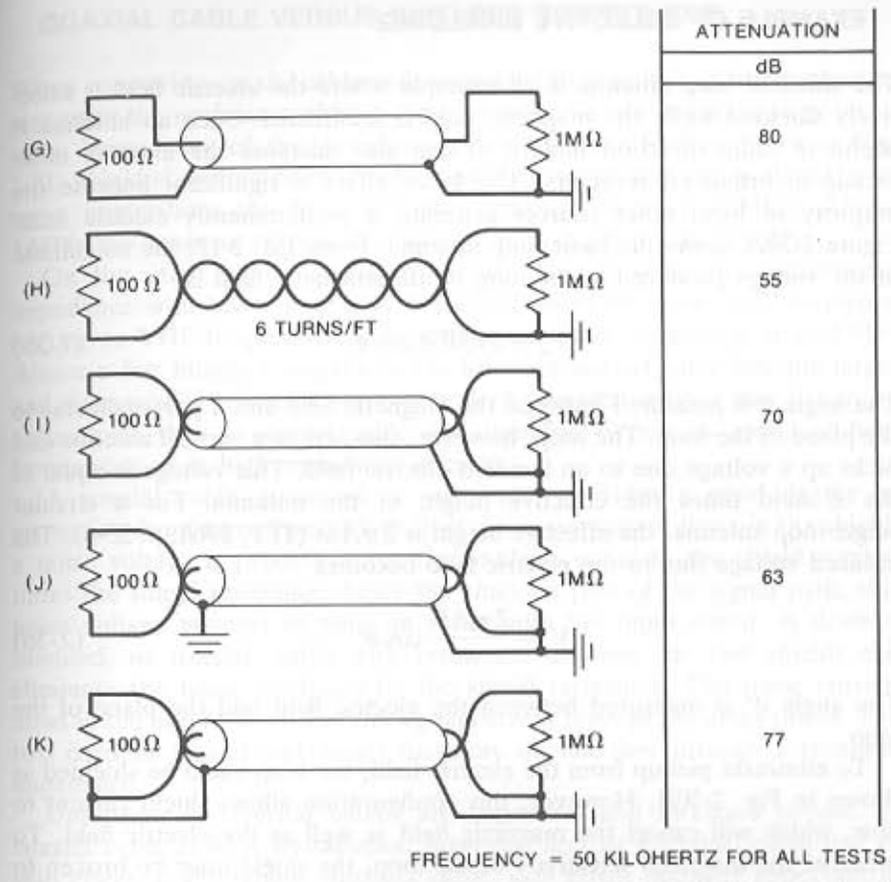

Figure 2-29. *Results of inductive coupling experiment; all circuits grounded at one end only.*

per foot for either of the twisted pairs (*H* or *I*) would reduce the pickup. In general, circuit *I* is preferred to circuit *G* for low-frequency magnetic shielding since in *I* the shield is not also one of the signal conductors.

Grounding both ends of the shield as in circuit *J* decreases the shielding slightly. This is due to the high shield current in the ground loop formed by the shield inducing unequal voltages in the two center conductors. Circuit *K* provides more shielding than *I* since it combines the features of the coax *G* with those of the twisted pair *I*. Circuit *K* is not normally desirable since any noise voltages or currents that do get on the shield can flow down the signal conductor. It is almost always better to connect the shield and signal conductors together at just one point. That point should be such that noise current from the shield does not have to flow down the signal conductor to get to ground.

EXAMPLE OF SELECTIVE SHIELDING

The shielded loop antenna is an example where the electric field is selectively shielded while the magnetic field is unaffected. Such an antenna is useful in radio direction finders. It can also decrease the antenna noise pickup in broadcast receivers. The latter effect is significant because the majority of local noise sources generate a predominantly electric field. Figure 2-30A shows the basic loop antenna. From Eq. 2-12, the magnitude of the voltage produced in the loop by the magnetic field is

$$V_m = 2\pi f B A \cos\theta \,. \tag{2-35}$$

The angle θ is measured between the magnetic field and a perpendicular to the plane of the loop. The loop, however, also acts as a vertical antenna and picks up a voltage due to an incident electric field. This voltage is equal to the E field times the effective height of the antenna. For a circular single-loop antenna, the effective height is $2\pi A/\lambda$ (ITT, 1968, p. 25-6). The induced voltage due to the electric field becomes

$$V_e = \frac{2\pi A E}{\lambda} \cos\theta' \,. \tag{2-36}$$

The angle θ' is measured between the electric field and the plane of the loop.

To eliminate pickup from the electric field, the loop could be shielded as shown in Fig. 2-30B. However, this configuration allows shield current to flow, which will cancel the magnetic field as well as the electric field. To preserve the magnetic sensitivity of the loop, the shield must be broken to prevent the flow of shield current. This can be done as shown in Fig. 2-30C by breaking the shield at the top. The resulting antenna responds only to the magnetic field component of an applied wave.

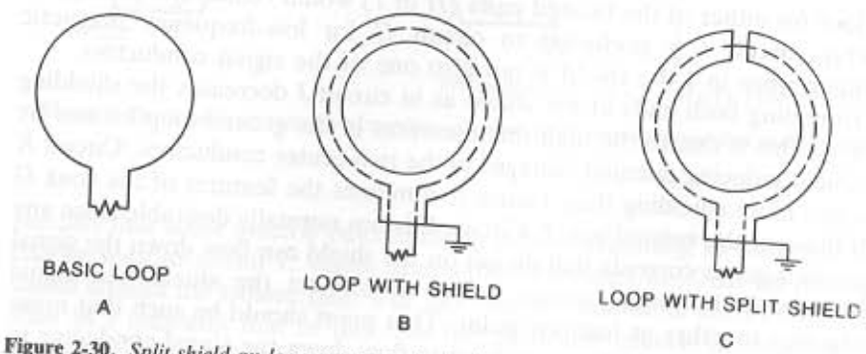

Figure 2-30. *Split shield on loop antenna selectively reduces electric field while passing magnetic field.*

COAXIAL CABLE VERSUS SHIELDED TWISTED PAIR

When comparing coaxial cable with a shielded twisted pair, it is important to recognize the usefulness of both types of cable from a propagation point of view, irrespective of their shielding characteristics. This is shown in Fig. 2-31. Shielded twisted pairs are very useful at frequencies below 100 kHz. In some applications the frequency may reach as high as 10 MHz. Above 1 MHz the losses in the shielded twisted pair increase considerably.

On the other hand, coaxial cable has a more uniform characteristic impedance with lower losses. It is useful, therefore, from zero frequency (dc) up to VHF frequencies, with some applications extending up to UHF. Above a few hundred megahertz the losses in coaxial cable become large, and waveguide becomes more practical. A shielded twisted pair has more capacitance than a coaxial cable and therefore is not as useful at high frequencies or in high-impedance circuits.

A coaxial cable grounded at one point provides a good degree of protection from capacitive pickup. But if a noise current flows in the shield, a noise voltage is produced. Its magnitude is equal to the shield current times the shield resistance. Since the shield is part of the signal path, this noise voltage appears as noise in series with the input signal. A double-shielded, or triaxial, cable with insulation between the two shields can eliminate the noise produced by the shield resistance. The noise current flows in the outer shield, and the signal current flows in the inner shield. The two currents (signal and noise) therefore do not flow through a common impedance.

Unfortunately, triaxial cables are expensive and awkward to use. A coaxial cable at high frequencies, however, acts as a triaxial cable due to skin effect. For a typical shielded cable, skin effect becomes important at

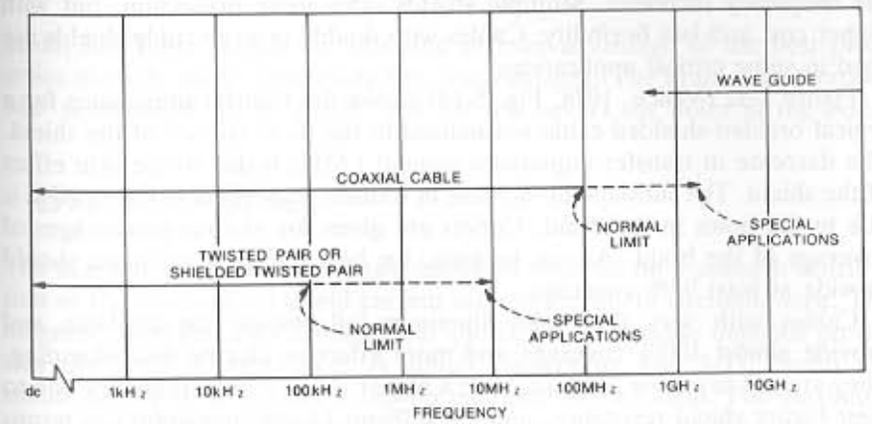

Figure 2-31. *Useful frequency range for various transmission lines.*

about 1 MHz. The noise current flows on the outside surface of the shield while the signal current flows on the inside surface. For this reason a coaxial cable is better for use at high frequencies.

A shielded twisted pair has characteristics similar to a triaxial cable and is not as expensive or awkward. The signal current flows in the two inner conductors, and any noise currents flow in the shield. Common-resistance coupling is eliminated. In addition any shield current is coupled equally into both inner conductors by mutual inductance, and the voltages therefore cancel.

An unshielded twisted pair, unless its terminations are balanced, provides very little protection against capacitive pickup, but it is very good for protection against magnetic pickup. The shielded twisted pair provides the best shielding for low-frequency signals, in which magnetic pickup is the major problem. The effectiveness of twisting increases as the number of twists per unit length increases.

BRAIDED SHIELDS

Most cables are actually shielded with braid rather than with a solid conductor. The advantages of braid are flexibility, durability, strength, and long flex life. Braids, however, typically provide only 60–98% coverage and are less effective as shields than solid conductors. Braided shields usually provide just slightly reduced electric field shielding (except at UHF frequencies) but greatly reduced magnetic field shielding. The reason is that braid distorts the uniformity of the shield current. A braid is typically from 5 to 30 dB less effective than a solid shield for protecting against magnetic fields.

At higher frequencies the effectiveness of the braid decreases further. This is because the braid holes become larger compared to a wavelength, as the frequency increases. Multiple shields offer more protection, but with higher cost and less flexibility. Cables with double or even triple shields are used in some critical applications.

Figure 2-32 (Vance, 1978, Fig. 5-14) shows the transfer impedance for a typical braided-shielded cable normalized to the dc resistance of the shield. The decrease in transfer impedance around 1 MHz is due to the skin effect of the shield. The subsequent increase in transfer impedance above 1 MHz is due to the holes in the braid. Curves are given for various percentages of coverage of the braid. As can be seen, for best shielding the braid should provide at least 95% coverage.

Cables with very thin solid aluminum-foil shields are available and provide almost 100% coverage and more effective electric field shielding. They are not as strong as braid, have a higher shield cutoff frequency due to their higher shield resistance, and are difficult (if not impossible) to terminate properly. Shields are also available that combine a foil shield with a

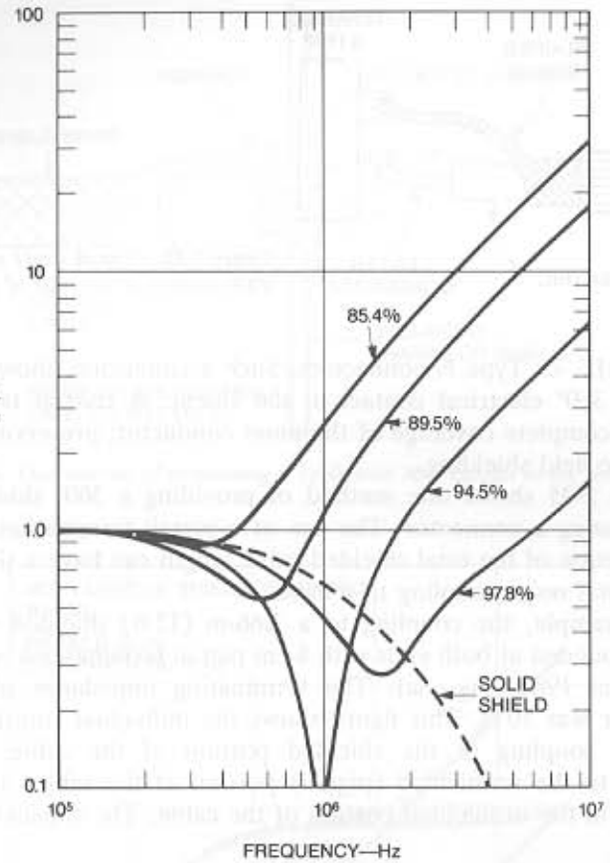

Figure 2-32. *Normalized transfer impedance of a braided-wire shield, as a function of percent braid coverage (from Vance, 1978, © Wiley).*

braid, and these shields are intended to take advantage of the best properties of each, while minimizing the disadvantages. The braid allows proper 360° termination of the shield, and the foil covers the holes in the braid.

EFFECT OF PIGTAILS

The magnetic shielding previously discussed depends on a uniform distribution of the longitudinal shield current around the shield circumference. The magnetic shielding effectiveness near the ends of the cable depends on the way the braid is terminated. A pigtail connection, Fig. 2-33, causes the shield current to be concentrated on one side of the shield. For maximum protection, the shield should be terminated uniformly around its cross section. This can be accomplished by using a coaxial connector such as the

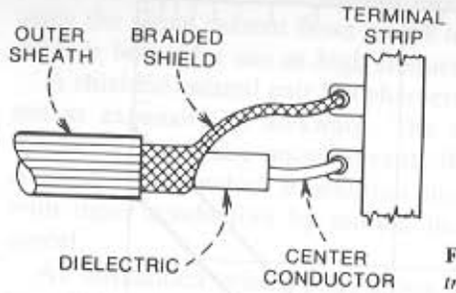

Figure 2-33. *Pigtail shield connection concentrates current on one side of shield.*

BNC, UHF, or Type N connectors. Such a connector, shown in Fig. 2-34, provides 360° electrical contact to the shield. A coaxial termination also provides complete coverage of the inner conductor, preserving the integrity of electric field shielding.

Figure 2-35 shows one method of providing a 360° shield termination without using a connector. The use of a pigtail termination that is only a small fraction of the total shielded cable length can have a significant effect on the total noise coupling to a cable.

For example, the coupling to a 3.66-m (12 ft) shielded cable with the shield grounded at both ends with 8-cm pigtail terminations is shown in Fig. 2-36 (Paul 1980, Fig. 8a). The terminating impedance of the shielded conductor was 50 Ω. This figure shows the individual contributions of the magnetic coupling to the shielded portion of the cable, the magnetic coupling to the unshielded (pigtail) portion of the cable, and the electric coupling to the unshielded portion of the cable. The capacitive coupling to

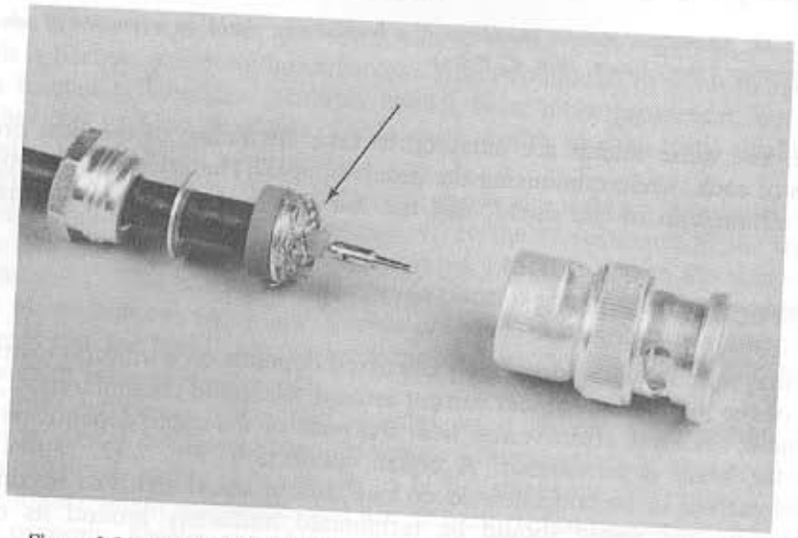

Figure 2-34. *Disassembled BNC connector showing a 360° contact to shield*

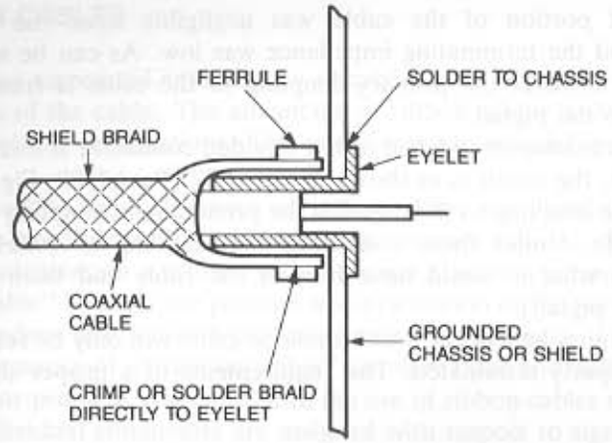

Figure 2-35. *One method of terminating a cable with 360° contact to the shield.*

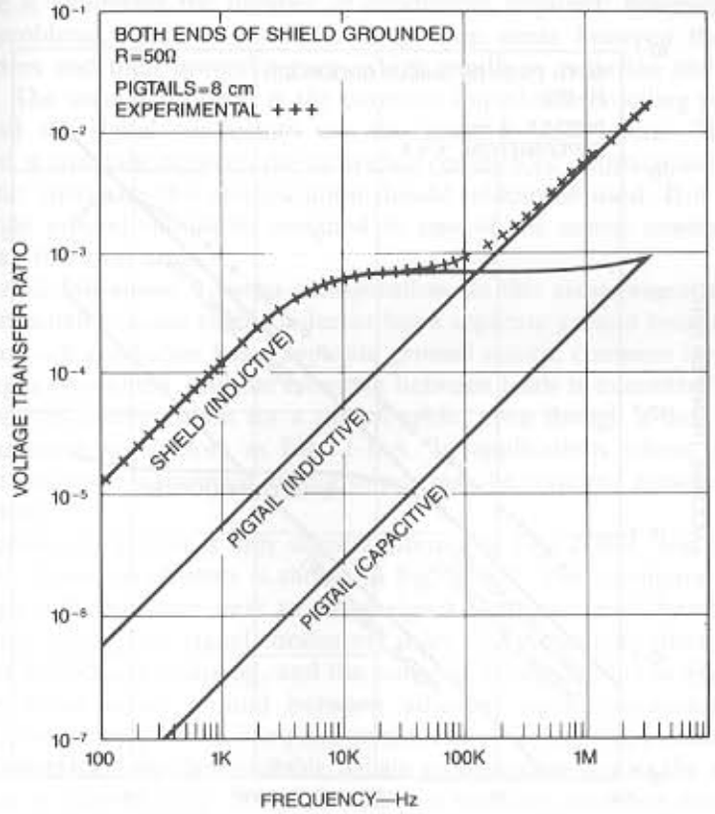

Figure 2-36. *Coupling to a 3.7-m shielded cable with an 8-cm pigtail termination. Circuit termination equals 50 Ω (from Paul, 1980, © IEEE).*

the shielded portion of the cable was negligible since the shield was grounded and the terminating impedance was low. As can be seen in Fig. 2-36, above 100 kHz the primary coupling to the cable is from inductive coupling into the pigtail.

If the terminating impedance of the shielded conductor is increased from 50 to 1000 Ω, the result is as shown in Fig. 2-37 (Paul 1980, Fig. 8b). Here the capacitive coupling to the pigtail is the predominant coupling mechanism above 10 kHz. Under these conditions the coupling at 1 MHz is 40 dB greater than what it would have been if the cable had been completely shielded (no pigtail).

The maximum benefits of a well-shielded cable will only be realized if the shield is properly terminated. The requirements of a proper shield termination are

1. A very low impedance ground connection
2. A 360° contact with the shield

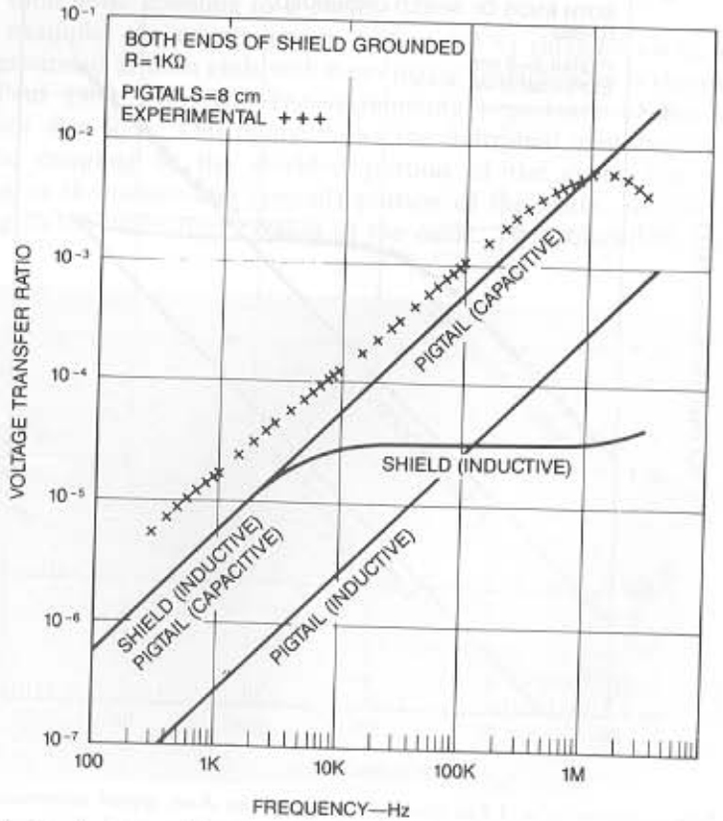

Figure 2-37. *Coupling to a 3.7-m shielded cable with an 8-cm pigtail termination. Circuit termination equals 1000 Ω (from Paul, 1980, © IEEE).*

RIBBON CABLES

A major cost associated with the use of cables is the expense related to the termination of the cable. The advantage of ribbon cables is that they allow low-cost multiple terminations. This is the primary reason for using ribbon cables.

Ribbon cables have a second advantage. They are "controlled cables" because the position and orientation of the wires within the cable is fixed, like the conductors on a printed wiring board. A normal wiring harness is a "random cable" because the position and orientation of the wires within the cable is random and varies from one harness to the next. Therefore the noise performance of a "random cable" can vary from one unit to the next.

The major problem associated with the use of ribbon cables relates to the way the individual conductors are assigned with respect to signal leads and grounds.

Figure 2-38A shows a ribbon cable where one conductor is a ground and all the remaining conductors are signal leads. This configuration is used because it minimizes the number of conductors required; however, it has three problems. First, it produces large loop areas between the signal conductors and their ground return, which results in radiation and susceptibility. The second problem is the common impedence coupling produced when all the signal conductors use the same ground return. The third problem is crosstalk between the individual conductors—both capacitive and magnetic; therefore this configuration should seldom be used. If it is used, the single ground should be assigned to one of the center conductors to minimize the loop areas.

Figure 2-38B shows a better configuration. In this arrangement the loop areas are small because each conductor has a separate ground return next to it. Since each conductor has a separate ground return, common impedance coupling is eliminated, and the crosstalk between leads is minimized. This is the preferred configuration for a ribbon cable, even though it does require twice as many conductors as Fig. 2-38A. In applications where crosstalk between cables is a problem, two grounds may be required between signal conductors.

A configuration that is only slightly inferior to Fig. 2-38B, and one that uses 25% fewer conductors is shown in Fig. 2-38C. This configuration also has a ground conductor next to every signal conductor and therefore has small loop areas. Two signal conductors share one ground, so there is some common impedance coupling, and the crosstalk is higher than in Fig. 2-38B because there is no ground between adjacent signal conductors. This configuration may provide adequate performance in some applications.

Ribbon cables are also available with a ground plane across the width of the cable as shown in Fig. 2-38D. In this case the loop areas are determined by the spacing between the signal conductor and the ground plane under it. Since this dimension is less than the lead-to-lead spacing in the cable, the loop areas are smaller than in the alternate ground configuration of Fig.

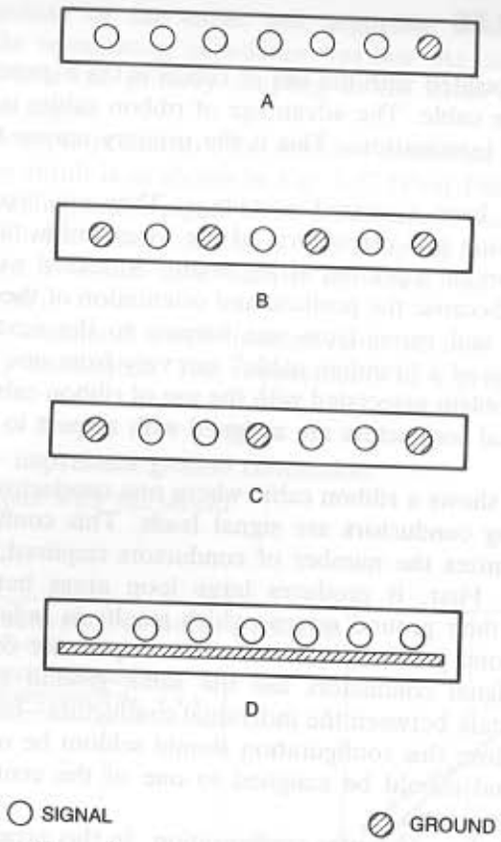

Figure 2-38. *Ribbon cable configurations: (A) single ground; (B) alternate ground; (C) ground/signal/signal/ground; (D) signal over ground plane.*

2-38B. If allowed to do so, the ground current will flow under the signal conductor, for the same reason that the current returned on the shield in Fig. 2-22. However, unless the cable is terminated with a full-width contact to the ground plane, the return currents will be forced out from under the signal leads, and the loop area will increase. Because it is difficult to terminate this kind of cable properly, it is not often recommended.

Shielded ribbon cables are also available; however, unless the shield is properly terminated with a 360° connection (a difficult thing to do), their effectivenesss is considerably reduced. The effect of shield termination on the radiation from ribbon cables was discussed by Palmgren (1981). Palmgren points out that the outside conductors in a shielded ribbon cable are not as well shielded as the conductors located closer to the center of the cable (typically 7 dB less shielding). This effect is due to the nonuniformity of the shield current at the outside edge of the shield. Therefore critical signals should not be placed on the outside conductors of shielded ribbon cables.

ELECTRICALLY LONG CABLES

The preceding analysis has assumed that the cables were short compared to a wavelength. What this really means is that all the current on the cable is in phase. Under these circumstances the theory predicts that both the electric and the magnetic field coupling increase with frequency indefinitely. In practice, however, the coupling levels off above some frequency.

As cables approach a quarter-wavelength in length, some of the current in the cable is out of phase. When the cable is a half-wavelength long the out-of-phase currents will cause the external coupling to be zero due to cancellation of effects. This does not alter the dependence of the coupling on the various other parameters of the problem; it only changes the numerical result. Therefore the parameters that determine the coupling remain the same, regardless of the length of the cables.

Figure 2-39 shows the coupling between two cables with and without the assumption that the cables are short. The results are similar up to the point where the phasing effects start to occur, about one-tenth of a wavelength. Above this point the actual coupling decreases because the current is not all in phase, whereas the short cable approximation predicts an increase in the

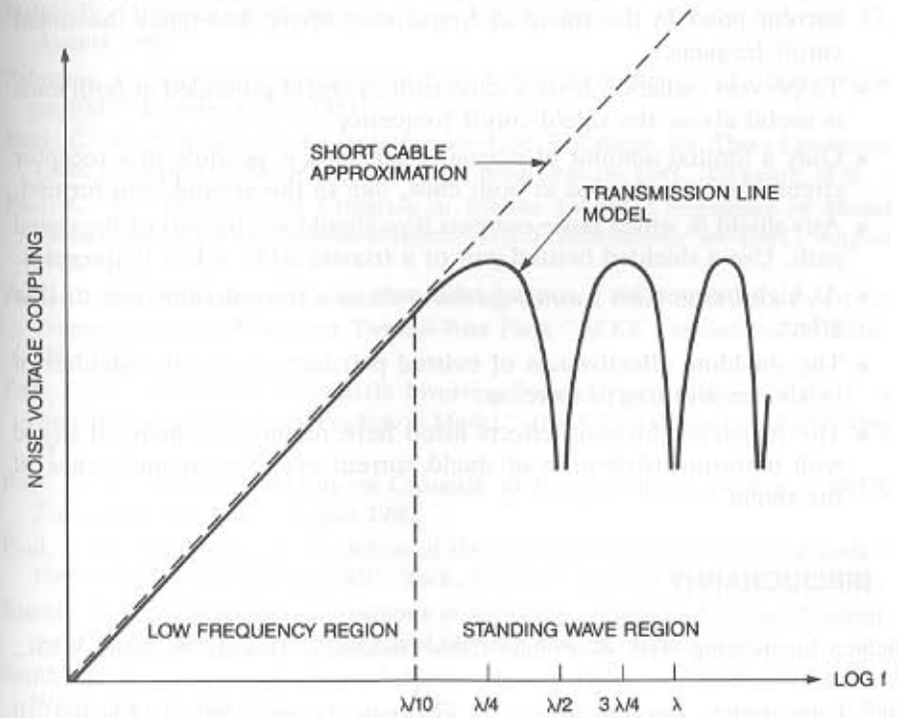

Figure 2-39. *Electric field coupling between cables using the short cable approximations and the transmission line model.*

coupling. If the rise in coupling predicted by the short cable approximation is truncated at a quarter-wavelength, it provides an approximation to the actual coupling. Note that the nulls and peaks produced by the phasing of the currents are not taken into account under these circumstances. However, unless one is planning to take advantage of these nulls and peaks in the design of equipment—a dangerous thing to do—their location is not important.

For more information on analyzing long cables see Paul (1979) and Smith (1977).

SUMMARY

- Electric fields are much easier to guard against than magnetic fields.
- The use of nonmagnetic shields around conductors provides no magnetic shielding.
- A shield grounded at one or more points shields against electric fields.
- The key to magnetic shielding is to decrease the area of the loop. To do that, use a twisted pair or a coaxial cable if the current return is through the shield instead of in the ground plane.
- For a coaxial cable grounded at both ends, virtually all of the return current flows in the shield at frequencies above five times the shield cutoff frequency.
- To prevent radiation from a conductor, a shield grounded at both ends is useful above the shield cutoff frequency.
- Only a limited amount of magnetic shielding is possible in a receptor circuit that is grounded at both ends, due to the ground loop formed.
- Any shield in which noise currents flow should not be part of the signal path. Use a shielded twisted pair or a triaxial cable at low frequencies.
- At high frequencies a coaxial cable acts as a triaxial cable due to skin effect.
- The shielding effectiveness of twisted pair increases as the number of twists per unit length increase.
- The magnetic shielding effects listed here require a cylindrical shield with uniform distribution of shield current over the circumference of the shield.

BIBLIOGRAPHY

Belden Engineering Staff. *Electronics Cable Handbook*. Howard W. Sams & Co., New York, 1966.

Bell Laboratories. *Physical Design of Electronic Systems*. Vol. 1, Chapter 10 (Electrical Interference). Prentice-Hall, Englewood Cliffs, N.J., 1970.

Buchman, A. S. "Noise Control in Low Level Data Systems." *Electromechanical Design*, September 1962.

Cathy, W., and Keith, R. "Coupling Reduction in Twisted Wires." IEEE International Symposium on EMC. Boulder Colo., August 1981.

Ficchi, R. O. *Electrical Interference*. Hayden Book Co., New York, 1964.

Ficchi, R. O. *Practical Design For Electromagnetic Compatibility*. Hayden Book Co., New York, 1971.

Frederick Research Corp. *Handbook on Radio Frequency Interference*. Vol. 3 (Methods of Electromagnetic Interference Suppression). Frederick Research Corp., Wheaton, Md. 1962.

Grover, F. W. "Inductance Calculations—Working Formulas and Tables." Instrument Society of America, 1973.

Hayt, W. H., Jr. *Engineering Electromagnetics*. 3rd ed. McGraw-Hill, New York, 1974.

Hilberg, W. "Electrical Characteristics of Transmission Lines." Artech House, 1979.

ITT. *Reference Data for Radio Engineers*. 5th ed. Howard W. Sams & Co., New York, 1968.

Mohr, R. J. "Coupling between Open and Shielded Wire Lines over a Ground Plane," *IEEE Transactions on EMC*, September 1976.

Morrison, R. *Grounding and Shielding Techniques in Instrumentation*. Wiley, New York, 1967.

Nalle, D. "Elimination of Noise in Low Level Circuits." *ISA Journal*, vol. 12, August, 1965.

Palmgren, C. "Shielded Flat Cables for EMI & ESD Reduction." IEEE Symposium on EMC. Boulder Colo., 1981.

Paul, C. R. "Solution of the Transmission-Line Equations for Three-Conductor Lines in Homogeneous Media." *IEEE Transactions on EMC*, February 1978.

Paul, C. R. "Prediction of Crosstalk in Ribbon Cables: Comparison of Model Predictions and Experimental Results." *IEEE Transactions on EMC*, August 1978.

Paul, C. R. "Prediction of Crosstalk Involving Twisted Pairs of Wires—Part I: A Transmission-Line Model for Twisted-Wire Pairs." *IEEE Transactions on EMC*, May 1979.

Paul, C. R. "Prediction of Crosstalk Involving Twisted Pairs of Wires—Part II: A Simplified Low-Frequency Prediction Model." *IEEE Transactions on EMC*, May 1979.

Paul, C. R. "Effect of Pigtails on Crosstalk to Braided-Shielded Cables." *IEEE Transactions on EMC*, August 1980.

Paul, C. R. "Modelling and Prediction of Ground Shift on Printed Circuit Boards." 1986 IERE Symposium on EMC. York, England, October 1986.

Ruehli, A. E. "Inductance Calculations in a Complex Integrated Circuit Environment." *IBM Journal of Research and Development*, September 1972.

Smith, A. A. *Coupling of External Electromagnetic Fields to Transmission Lines*. Wiley, New York, 1977.

Smythe, W. R. *Static and Dynamic Electricity*. McGraw-Hill, New York, 1924.

Timmons, F. "Wire or Cable Has Many Faces, Part 2." *EDN*, March 1970.

Trompeter, E. "Cleaning Up Signals with Coax." *Electronic Products Magazine*, July 16, 1973.

Vance, E. F. *Coupling to Shielded Cables*. Wiley, New York, 1978.

White, D. R. J. *Electromagnetic Interference and Compatibility*. Vol. 3 (EMI Control Methods and Techniques). Don White Consultants, Germantown, Md., 1973.

3 GROUNDING

Grounding is one of the primary ways of minimizing unwanted noise and pickup. Proper use of grounding and cabling, in combination, can solve a large percentage of all noise problems. A good ground system must be designed; it is wishful thinking to expect a ground system to perform well if no thought has been given to its design. It is difficult to believe that expensive engineering time should be devoted to sorting out the minute details of circuit grounding, but in the end, not having to solve mysterious noise problems once the equipment is built and tested saves both money and time.

One advantage of a well-designed ground system is that it can provide protection against unwanted interference and emission, without any additional per-unit cost to the product. The only cost is the engineering time required to design the system. In comparison, an improperly designed ground system may be a primary source of interference and emission and therefore require considerable engineering time to eliminate the problem. Hence properly designed ground systems are truly cost-effective.

Grounds fall into two categories: (1) safety grounds and (2) signal grounds. If the ground is connected to the earth through a low impedance path, it may be called an earth ground. Safety grounds are usually at earth potential, whereas signal grounds may or may not be at earth potential. In many cases a safety ground is required at a point that is unsuitable for a signal ground, and this may complicate the noise problem.

SAFETY GROUNDS

Safety considerations require the chassis or enclosure for electric equipment to be grounded. Why this is so can be seen in Fig. 3-1. In the left-hand diagram Z_1 is the stray impedance between a point at potential V_1 and the chassis, and Z_2 is the stray impedance between the chassis and ground. The potential of the chassis is determined by impedances Z_1 and Z_2 acting as a voltage divider. The chassis potential is

$$V_{\text{chassis}} = \left(\frac{Z_2}{Z_1 + Z_2}\right) V_1 . \tag{3-1}$$

The chassis could be a relatively high potential and be a shock hazard, since its potential is determined by the relative values of the stray impedances

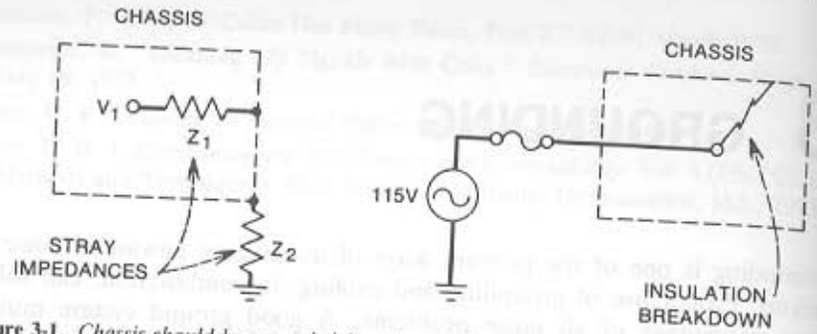

Figure 3-1. *Chassis should be grounded for safety. Otherwise, it may reach a dangerous voltage level through stray impedances (left) or insulation breakdown (right).*

over which there is very little control. If the chassis is grounded, however, its potential is zero since Z_2 becomes zero.

The right-hand diagram of Fig. 3-1 shows a second and far more dangerous situation: a fused ac line entering an enclosure. If there should be an insulation breakdown such that the ac line comes in contact with the chassis, the chassis would then be capable of delivering the full current capacity of the fused circuit. Anyone coming in contact with the chassis and ground would be connected directly across the ac power line. If the chassis is grounded, however, such an insulation breakdown will draw a large current from the ac line and cause the fuse to blow, thus removing the voltage from the chassis.

In the United States, ac power distribution and wiring standards are contained in the National Electrical Code. One requirement of this code specifies that 115-V ac power distribution in homes and buildings must be a three wire system, as shown in Fig. 3-2. Load current flows through the hot

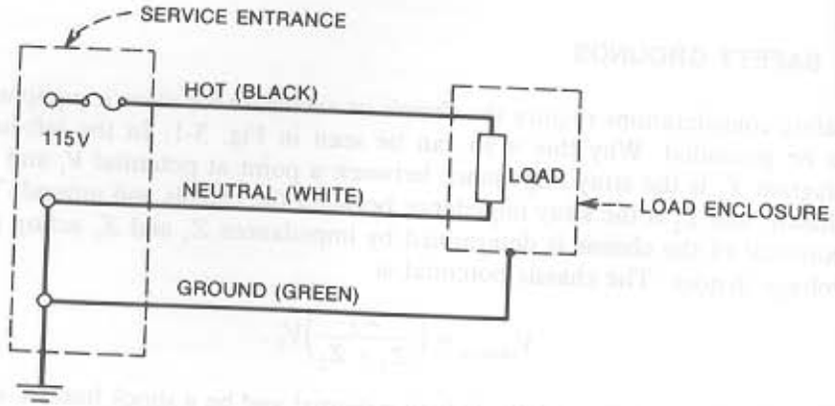

Figure 3-2. *Standard 115-V ac power distribution circuit has three leads.*

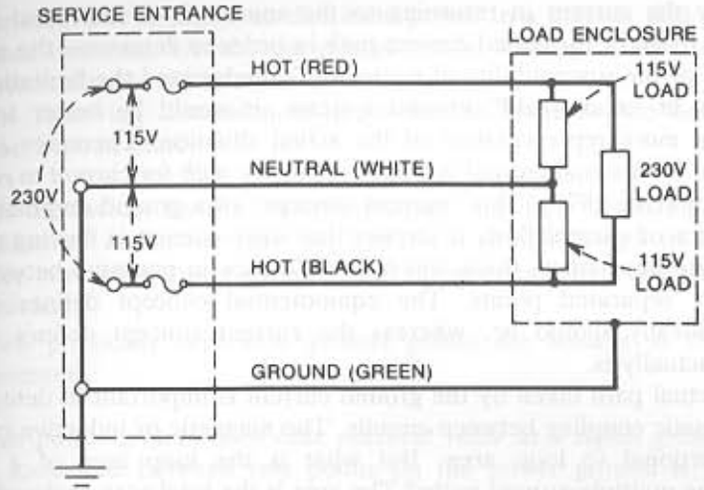

Figure 3-3. *Combination 115/230-V ac power distribution circuit has four leads.*

wire (black), which is fused, and returns through the neutral wire (white). In addition a safety ground wire (green) must be connected to all equipment enclosures and hardware. The only time the green wire carries current is during a fault, and then only momentarily until the fuse or breaker opens the circuit. Since no load current flows in the safety ground, it has no IR drop, and the enclosures connected to it are always at ground potential. The National Electrical Code specifies that the neutral and safety ground shall be connected together at only one point, and this point shall be at the main service entrance.* To do otherwise would allow some of the neutral current to return on the ground conductor. A combination 115/230-V system is similar, except an additional hot wire (red) is added, as shown in Fig. 3-3. If the load requires only 230 V the neutral (white) wire shown in Fig. 3-3 is not required.

SIGNAL GROUNDS

A ground is normally defined as an equipotential† point or plane that serves as a reference potential for a circuit or system. This definition, however, is not representative of practical ground systems because they are not equipotentials; also it does not emphasize the importance of the actual path

*Allowable exceptions are electric ranges, wall-mounted ovens, counter-mounted cooking units, and electric clothes dryers. For these appliances the case may be connected to ground via the neutral wire. See the National Electrical Code, paragraph 250-60, 1987.

†A point where the voltage does not change, regardless of the current applied to it or drawn from it.

taken by the current in returning to the source. It is important for the designer to know the actual current path in order to determine the radiated emission or the susceptibility of a circuit. To understand the limitations and problems of "real world" ground systems, it would be better to use a definition more representative of the actual situation. Therefore a better definition for a signal ground is *a low-impedance path for current to return to the source* (Ott, 1979). This "current concept" of a ground emphasizes the importance of current flow. It implies that since current is flowing through some finite impedance, there will be a difference in potential between two physically separated points. The equipotential concept defines what a ground ideally should be, whereas the current concept defines what a ground actually is.

The actual path taken by the ground current is important in determining the magnetic coupling between circuits. The magnetic or inductive coupling is proportional to loop area. But what is the loop area of a system containing multiple ground paths? The area is the total area enclosed by the actual current flow. An important consideration in determining this area is the ground path taken by the current in returning to the source. Often this is not the path intended by the designer.

In designing a ground it is important to ask: How does the current flow? The path taken by the ground current must be determined. Then, since any conductor-carrying current will have a voltage drop, the effect of this voltage drop on the performance of the other circuits connected to the ground must be considered.

The proper signal ground system is determined by the type of circuitry, the frequency of operation, the size of the system (self-contained or distributed), and other constraints, such as safety. No one ground system is appropriate for all applications.

Signal grounds usually fall into one of three categories: (1) single-point grounds, (2) multipoint grounds, and (3) hybrid grounds. Single-point and multipoint grounds are shown in Figs. 3-4 and 3-5, respectively. A hybrid ground is shown in Fig. 3-6. There are two subclasses of single-point grounds: those with series connections and those with parallel connections. The series connection is also called a common ground or daisy chain, and the parallel connection is called a separate ground system.

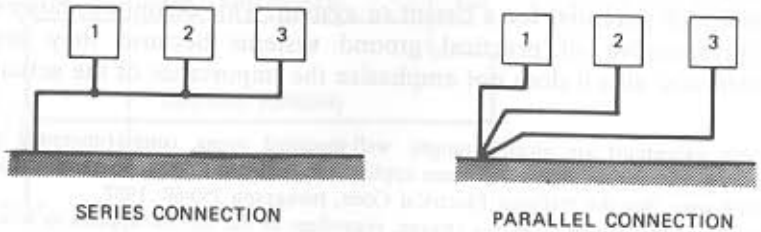

Figure 3-4. *Two types of single-point grounding connections.*

In general, it is desirable to distribute power in a manner that parallels the ground structure. Usually the ground system is designed first, and then the power is distributed in a similar manner.

In the following discussion of grounding techniques, two key points should be kept in mind:

1. All conductors have a finite impedance, generally consisting of both resistance and inductance. At 11 kHz, a straight length of 22-gauge wire one inch above a ground plane has more inductive reactance than resistance.
2. Two physically separated ground points are seldom at the same potential.

The ac power ground is of little practical value as a signal ground. The voltage measured between two points on the power ground is typically hundreds of millivolts, and in some cases many volts. This is excessive for low-level signal circuits. A single-point connection to the power ground is usually required for safety, however.

SINGLE-POINT GROUND SYSTEMS

With regard to noise, the most undesirable single-point ground system is the common ground system shown in Fig. 3-6. This is a series connection of all the individual circuit grounds. The resistances shown represent the impedance of the ground conductors, and I_1, I_2, and I_3 are the ground currents of

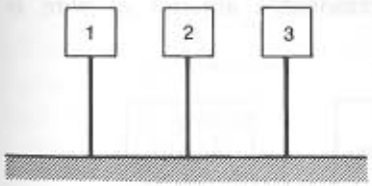

Figure 3-5. *Multipoint grounding connections.*

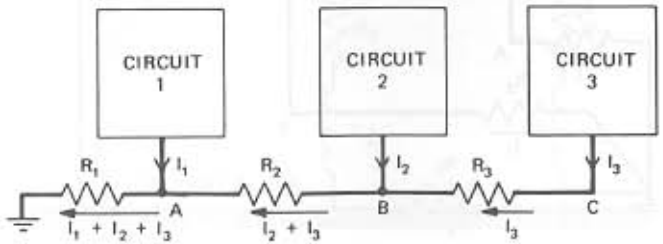

Figure 3-6. *Common ground system is a series ground connection and is undesirable from a noise standpoint but has the advantage of simple wiring.*

circuits 1, 2, and 3, respectively. Point A is not at zero potential but is at a potential of

$$V_A = (I_1 + I_2 + I_3)R_1 , \tag{3-2}$$

and point C is at a potential of

$$V_C = (I_1 + I_2 + I_3)R_1 + (I_2 + I_3)R_2 + I_3R_3 . \tag{3-3}$$

Although this circuit is the least desirable single-point grounding system, it is probably the most widely used because of its simplicity. For noncritical circuits it may be perfectly satisfactory. This system should not be used between circuits operating at widely different power levels, since the high-level stages produce large ground currents which in turn adversely affect the low-level stage. When this system is used, the most critical stage should be the one nearest the primary ground point. Note that point A in Fig. 3-6 is at a lower potential than point B or C.

The separate ground system (parallel connection) shown in Fig. 3-7 is the most desirable at low frequencies. That is because there is no cross coupling between ground currents from different circuits. The potentials at points A and C, for example, are as follows:

$$V_A = I_1R_1 , \tag{3-4}$$

$$V_C = I_3R_3 . \tag{3-5}$$

The ground potential of a circuit is now a function of the ground current and impedance of that circuit only. This system is mechanically cumbersome, however, since in a large system an unreasonable amount of wire is necessary.

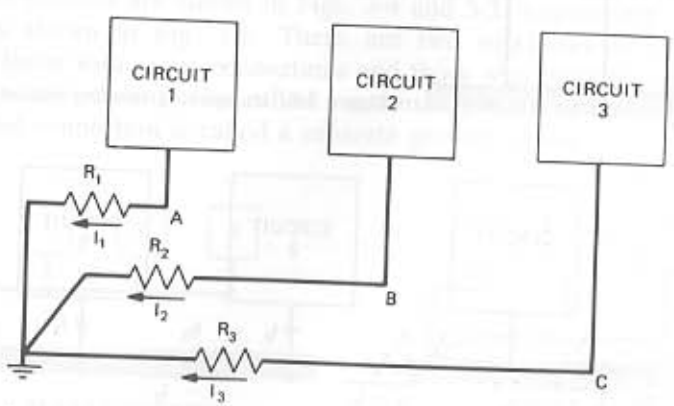

Figure 3-7. *Separate ground system is a parallel ground connection and provides good low-frequency grounding but is mechanically cumbersome.*

A limitation of the single-point ground system occurs at high frequencies, where the inductances of the ground conductors increase the ground impedance. At still higher frequencies the impedance of the ground wires can be very high if the length coincides with odd multiples of a quarter-wavelength. Not only will these grounds have large impedance, but they will also act as antennas and radiate noise. Ground leads should always be kept shorter than one-twentieth of a wavelength to prevent radiation and to maintain a low impedance. At high frequencies there is no such thing as a single-point ground.

MULTIPOINT GROUND SYSTEMS

The multipoint ground system is used at high frequencies and in digital circuitry to minimize the ground impedance. In this system, shown in Fig. 3-8, circuits are connected to the nearest available low-impedance ground plane, usually the chassis. The low ground impedance is due primarily to the lower inductance of the ground plane. The connections between each circuit and the ground plane should be kept as short as possible to minimize their impedance. In very high frequency circuits the length of these ground leads must be kept to a small fraction of an inch. Multipoint grounds should be avoided at low frequencies since ground currents from all circuits flow through a common ground impedance—the ground plane. At high frequencies, the common impedance of the ground plane can be reduced by silver plating the surface. Increasing the thickness of the ground plane has no effect on its high frequency impedance, since current flows only on the surface due to skin effect.

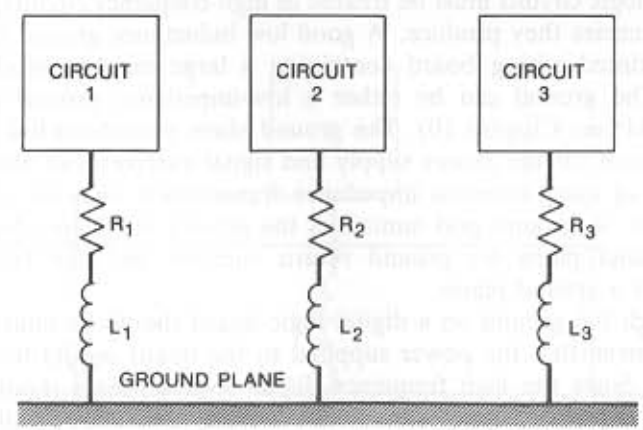

Figure 3-8. *Multipoint ground system is a good choice at frequencies above 10 MHz. Impedances R_1–R_3 and L_1–L_3 should be minimized.*

Normally at frequencies below one megahertz a single-point ground system is preferable; above 10 MHz, a multipoint ground system is best. Between 1 and 10 MHz a single-point ground can usually be used, provided the length of the longest ground conductor is less than one-twentieth of a wavelength. If it is greater than one-twentieth of a wavelength, a multipoint ground system should be used.

Many ground system problems occur as the result of common impedance coupling. Common impedance coupling becomes a problem under one or more of the following conditions:

1. A high-impedance ground (usually too much inductance)
2. A large ground current (often due to power frequency currents or magnetic field pickup)
3. A very sensitive (low noise-margin) circuit connected to the ground

Single-point grounds overcome these problems by separating ground currents that are likely to interfere and forcing them to flow on different conductors. This is effective at low frequencies. However, the single current paths and long lead lengths increase the inductance which is detrimental at high frequencies. In addition at high frequencies single-point grounds are almost impossible to achieve because parasitic capacitance closes the ground loop.

Multipoint grounds overcome these problems by producing a very low ground impedance. The ground system is interconnected by a large number of parallel paths (a grid) or a solid metal plate (a plane). Multipoint grounds create ground loops that may be prone to magnetic field pickup. The obvious solution is to keep the area of the loops small by using a grid or plane and to avoid multipoint grounds with very low noise-margin (low millivolt or microvolts) circuits.

Digital logic circuits must be treated as high-frequency circuits, due to the high frequencies they produce. A good low inductance ground is necessary on any printed wiring board containing a large number of digital logic circuits. The ground can be either a low-impedance ground plane or a ground grid (see Chapter 10). The ground plane provides a low inductance ground return for the power supply and signal currents and allows for the possibility of using constant impedance transmission lines for signal interconnections. A ground grid minimizes the ground inductance by providing many parallel paths for ground return currents and can be almost as effective as a ground plane.

Although the ground on a digital logic board should be multipoint, that does not mean that the power supplied to the board should be multipoint grounded. Since the high frequency digital logic currents should not flow through the power supply conductors feeding the board, and since the power is low frequency (dc), it can be wired as a single point ground, even though the logic board ground is multipoint.

HYBRID GROUNDS

A hybrid ground is one in which the system-grounding configuration appears differently at different frequencies. Figure 3-9 shows a common type hybrid ground system that acts as a single-point ground at low frequencies and a multipoint ground at high frequencies. A practical application of this principle is the cable-grounding scheme shown in Fig. 3-38. At low frequencies the cable shield is single-point grounded, and at high frequencies it is multipoint grounded.

A different type of hybrid ground is shown in Fig. 3-10. This hybrid ground, although not as common as the one just mentioned, is used when a number of chassis must be grounded to the power system green wire ground for safety reasons, but it is desirable to have a single-point signal ground for the circuitry. The chokes provide a low-impedance safety ground at power line frequencies and ground isolation at higher frequencies.

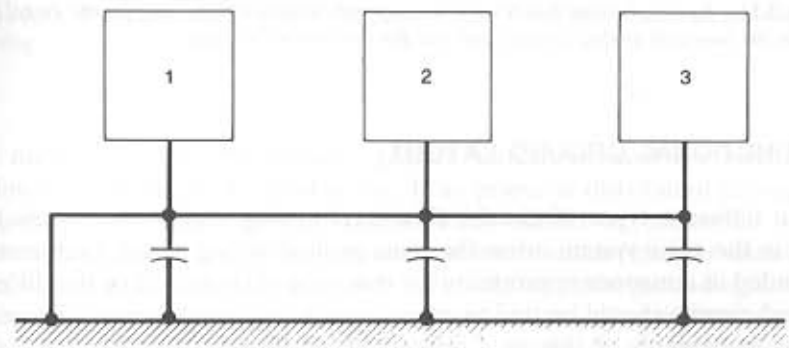

Figure 3-9. *A hybrid ground connection that acts as a single-point ground at low frequencies and a multipoint ground at high frequencies.*

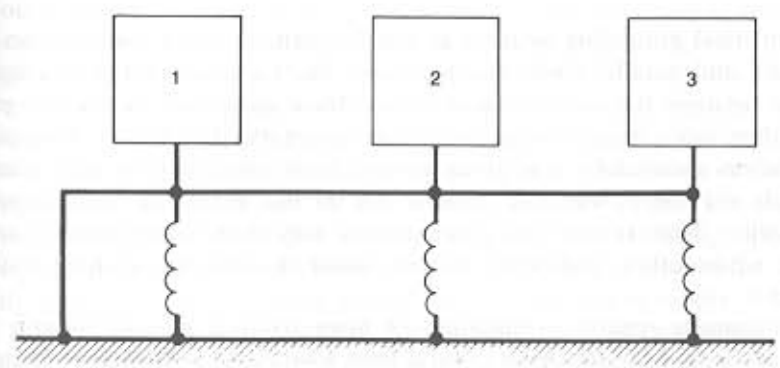

Figure 3-10. *A hybrid ground connection that acts as a multipoint ground at low frequencies and a single-point ground at high frequencies.*

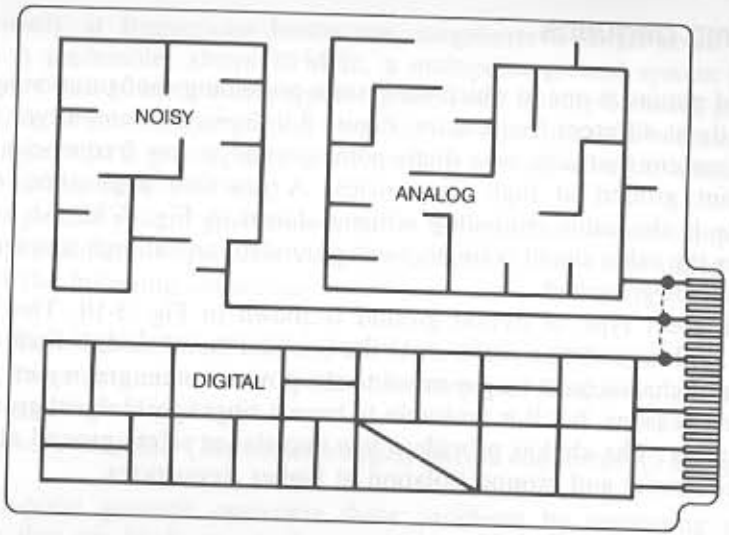

Figure 3-11. *A printed wiring board with three separate ground systems, one for the digital logic, one for the low-level analog circuits, and one for the "noisy" circuits.*

FUNCTIONAL GROUND LAYOUT

When different types of circuits (low-level analog, digital, noisy, etc.) are used in the same system or on the same printed wiring board, each must be grounded in a manner appropriate for that type of circuit. Then the different ground circuits should be tied together, usually at a single point. Figure 3-11 shows an example of this on a printed wiring board.

PRACTICAL LOW-FREQUENCY GROUNDING

Most practical grounding systems at low frequencies are a combination of the series and parallel single-point ground. Such a combination is a compromise between the need to meet the electrical noise criteria and the goal of avoiding more wiring complexity than necessary. The key to balancing these factors successfully is to group ground leads selectively, so that circuits of widely varying power and noise levels do not share the same ground return wire. Thus several low-level circuits may share a common ground return, while other high-level circuits share a different ground return conductor.

Most systems require a minimum of three separate ground returns, as shown in Fig. 3-12. The signal ground used for low-level electronic circuits should be separated from the "noisy" ground used for circuits such as relays

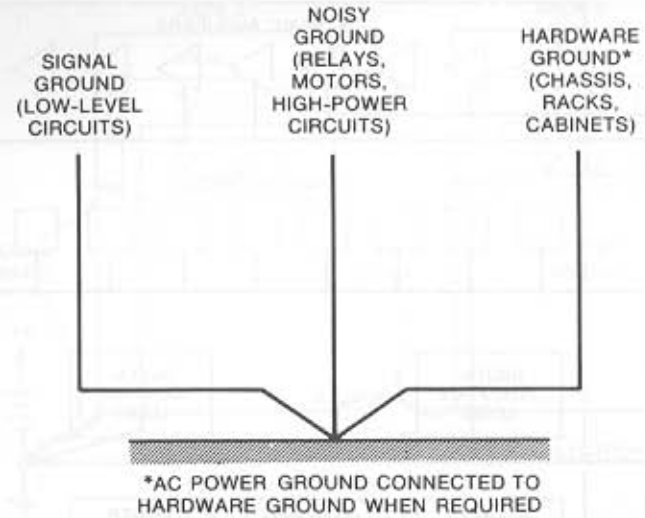

Figure 3-12. *These three classes of grounding connections should be kept separate to avoid noise coupling.*

and motors. A third "hardware" ground should be used for mechanical enclosures, chassis, racks, and so on. If ac power is distributed throughout the system, the power ground (green wire) should be connected to the hardware ground. The three separate ground return circuits should be connected together at only one point. Use of this basic grounding configuration in all equipment would greatly minimize grounding problems.

An illustration of how these grounding principles might be applied to a nine-track digital tape recorder is shown in Fig. 3-13. There are three signal grounds, one noisy ground, and one hardware ground. The most sensitive circuits, the nine read amplifiers, are grounded by using two separate ground returns. Five amplifiers are connected to one, and four are connected to the other. The nine write amplifiers, which operate at a much higher level than the read amplifiers, and the interface and control logic are connected to a third ground return. The three dc motors and their control circuits, the relays, and the solenoids are connected to the noisy ground. Of these elements, the capstan motor control circuit is the most sensitive; it is properly connected closest to the primary ground point. The hardware ground provides the ground for the enclosure and housing. The signal grounds, noisy ground, and hardware ground should be connected together only at the source of primary power, that is, the power supply.

When designing the grounding system for a piece of equipment, a block diagram similar to Fig. 3-13 can be very useful in determining the proper interconnection of the various circuit grounds.

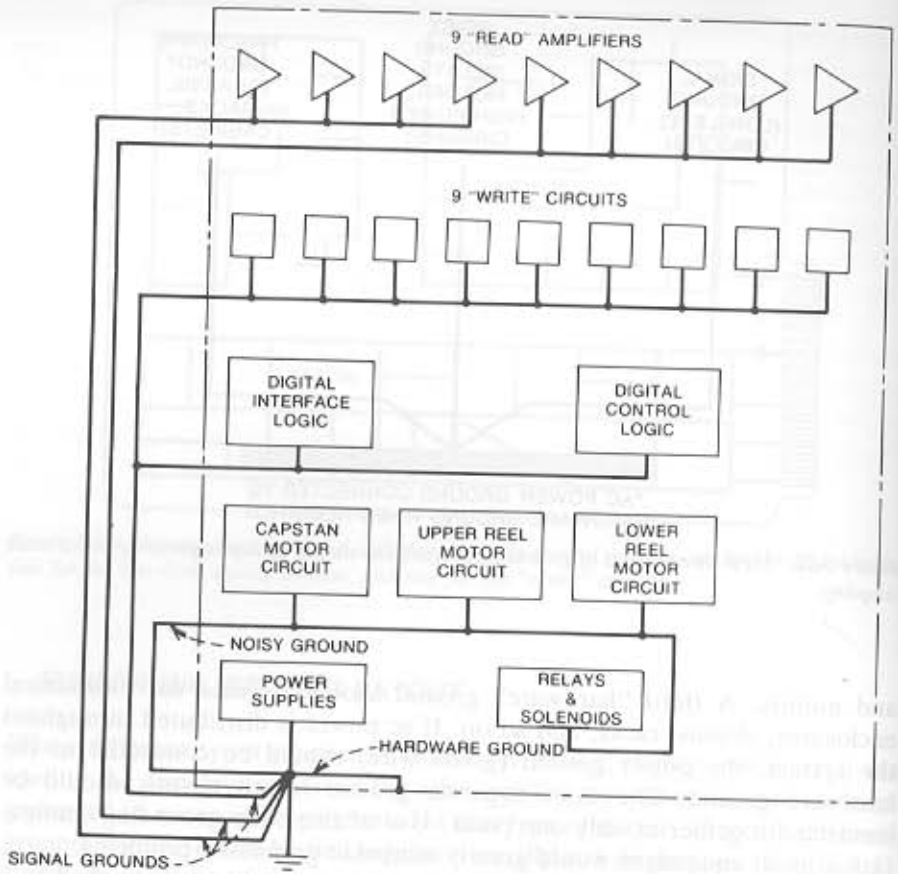

Figure 3-13. *Typical grounding system for nine-track digital tape recorder.*

HARDWARE GROUNDS

Electronic circuits for any large system are usually mounted in relay racks or cabinets. These racks and cabinets must be grounded for safety. In some systems such as electromechanical telephone offices, the racks serve as the return conductor for relay switching circuits. The rack ground is often very noisy, and it may have fairly high resistance due to joints and seams in the rack or in pull-out drawers.

Figure 3-14 shows a typical system consisting of sets of electronics mounted on panels which are then mounted to two relay racks. Rack number 1, on the left, shows correct grounding. The panel is strapped to the rack to provide a good ground, and the racks are strapped together and tied to ground at the primary power source. The electronics circuit ground does not make contact with the panel or rack. In this way noise currents on the

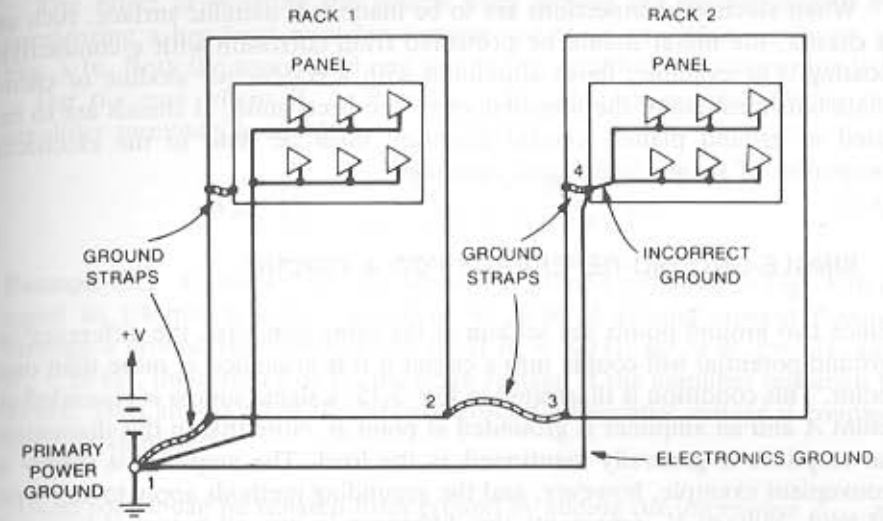

Figure 3-14. *Electronic circuits mounted in equipment racks should have separate ground connections. Rack 1 shows correct grounding; rack 2 shows incorrect grounding.*

rack cannot return to ground through the electronics ground. At high frequencies some of the rack noise current can return on the electronics ground due to capacitive coupling between the rack and electronics. This capacitance should therefore be kept as small as possible. Rack 2, on the right, shows an incorrect installation in which the circuit ground is connected to the rack ground.* Noise currents on the rack can now return on the electronics ground, and there is a ground loop between points 1, 2, 3, 4, and 1.

If the installation does not provide a good ground connection to the rack or panel, it is best to eliminate the questionable ground, and then provide a definite ground by some other means, or be sure that there is no ground at all. Do not depend on sliding drawers, hinges, and so on, to provide a reliable ground connection. When the ground is of a questionable nature, performance may vary from system to system or time to time, depending on whether or not the ground is made.

Hardware grounds produced by intimate contact, such as welding, brazing or soldering, are better than those made by screws and bolts. When joining dissimilar metals for grounding, care must be taken to prevent galvanic corrosion and to ensure that galvanic voltages are not troublesome. Improperly made ground connections may perform perfectly well on new equipment but may be the source of mysterious trouble later.

*A circuit ground to rack ground connection may be required for electrostatic discharge protection. See Chapter 12.

When electrical connections are to be made to a metallic surface, such as a chassis, the metal should be protected from corrosion with a conductive coating. For example, finish aluminum with a conductive alodine or chromate finish instead of the nonconductive anodized finish. If chassis are to be used as ground planes, careful attention must be paid to the electrical properties of seams, joints, and openings.

SINGLE-GROUND REFERENCE FOR A CIRCUIT

Since two ground points are seldom at the same potential, the difference in ground potential will couple into a circuit if it is grounded at more than one point. This condition is illustrated in Fig. 3-15; a signal source is grounded at point A and an amplifier is grounded at point B. Note that in this discussion an amplifier is generally mentioned as the load. The amplifier is simply a convenient example, however, and the grounding methods apply to any type of load. Voltage V_G represents the difference in ground potential between points A and B. In Fig. 3-15 and subsequent illustrations, two different ground symbols are used to emphasize that two physically separated grounds are not usually at the same potential. Resistors R_{C1} and R_{C2} represent the resistance of the conductors connecting the source to the amplifier.

In Fig. 3-15 the input voltage to the amplifier is equal to $V_s + V_G$. To eliminate the noise, one of the ground connections must be removed. Elimination of the ground connection at B means the amplifier must operate from an ungrounded power supply. A differential amplifier could also be used, as discussed later in this chapter. It is usually easier, however, to eliminate ground connection A at the source.

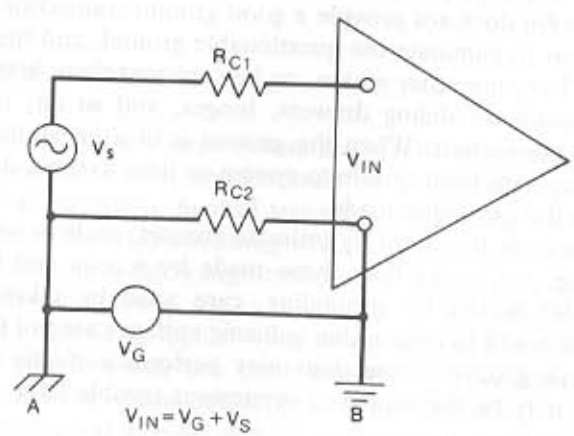

Figure 3-15. *Noise voltage V_G will couple into the amplifier if the circuit is grounded at more than one point.*

The effect of isolating the source from ground can be determined by considering a low-level transducer connected to an amplifier, as shown in Fig. 3-16. Both the source and one side of the amplifier input are grounded.

For the case where $R_{C2} \ll R_s + R_{C1} + R_L$, the noise voltage V_N at the amplifier terminals is equal to

$$V_N = \left[\frac{R_L}{R_L + R_{C1} + R_s}\right]\left[\frac{R_{C2}}{R_{C2} + R_G}\right]V_G . \tag{3-6}$$

Example 3-1. Consider the case where the ground potential in Fig. 3-16 is equal to 100 mV, a value equivalent to 10 A of ground current flowing through a ground resistance of 0.01 Ω. If $R_s = 500\ \Omega$, $R_{C1} = R_{C2} = 1\ \Omega$, and $R_L = 10\ \text{k}\Omega$, then from Eq. 3-6 the noise voltage at the amplifier terminals is 95 mV. Thus almost all of the 100-mV ground differential voltage is coupled into the amplifier.

The source can be isolated from ground by adding the impedance Z_{SG}, as shown in Fig. 3-17. Ideally, the impedance Z_{SG} would be infinite, but due to leakage resistance and capacitance it has some large finite value. For the case where $R_{C2} \ll R_s + R_{C1} + R_L$, and $Z_{SG} \gg R_{C2} + R_G$, the noise voltage V_N at the amplifier terminals is

$$V_N = \left[\frac{R_L}{R_L + R_{C1} + R_s}\right]\left[\frac{R_{C2}}{Z_{SG}}\right]V_G . \tag{3-7}$$

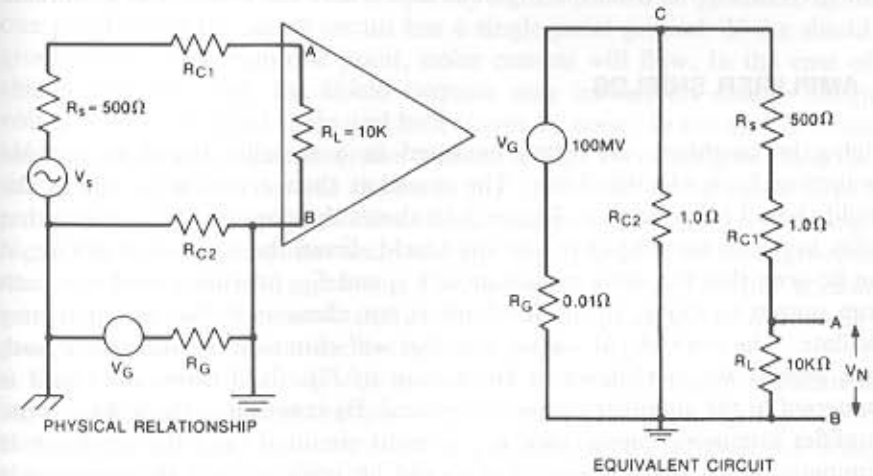

Figure 3-16. *With two ground connections, much of the ground-potential difference appears across the load as noise.*

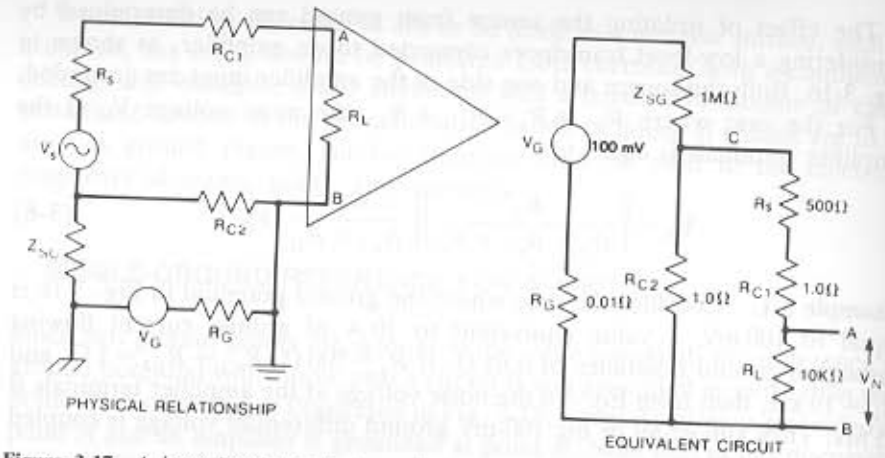

Figure 3-17. *A large impedance between the source and ground keeps most of the ground-potential difference away from the load and reduces noise.*

Most of the noise reduction obtained by isolating the source is due to the second term of Eq. 3-7. If Z_{SG} is infinite, there is no noise voltage coupled into the amplifier. If the impedance Z_{SG} from source to ground is 1 MΩ and all other values are the same as in the previous example, the noise voltage at the amplifier terminals is, from Eq. 3-7, now only 0.095 μV. This is a reduction of 120 dB from the previous case where the source was grounded.

AMPLIFIER SHIELDS

High-gain amplifiers are often enclosed in a metallic shield to provide protection from electric fields. The question then arises as to where the shield should be grounded. Figure 3-18 shows the parasitic capacitance that exists between the amplifier and the shield. From the equivalent circuit, it can be seen that the stray capacitances C_{3S} and C_{1S} provide a feedback path from output to input. If this feedback is not eliminated, the amplifier may oscillate. *The only shield connection that will eliminate the unwanted feedback path is the one shown at the bottom of Fig. 3-18 where the shield is connected to the amplifier common terminal.* By connecting the shield to the amplifier common, capacitance C_{2S} is short-circuited, and the feedback is eliminated. This shield connection should be made even if the common is not at earth ground.

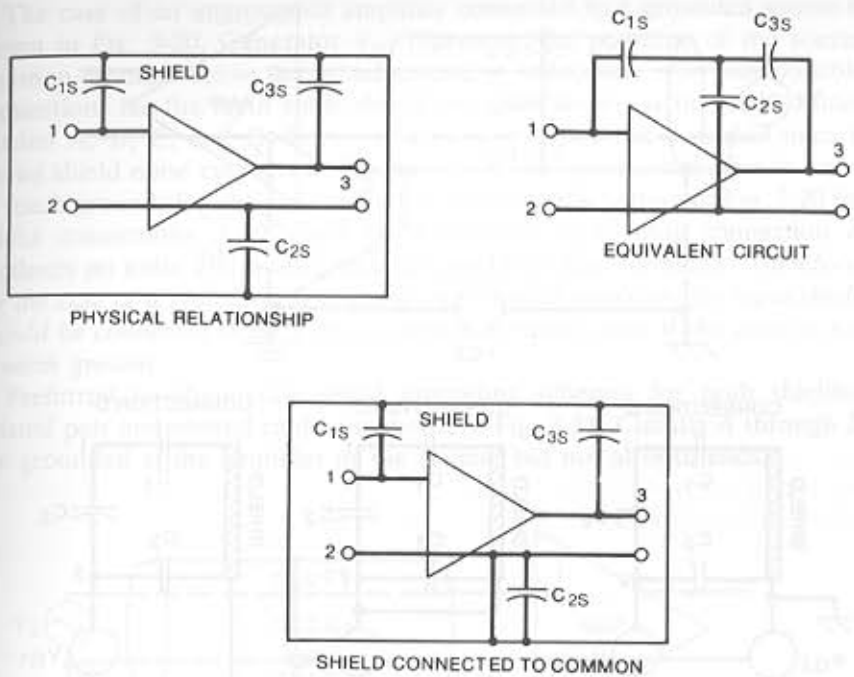

Figure 3-18. *Amplifier shield should be connected to the amplifier common.*

GROUNDING OF CABLE SHIELDS

Shields on cables used for low-frequency signals should be grounded at only one point when the signal circuit has a single-point ground. If the shield is grounded at more than one point, noise current will flow. In the case of a shielded twisted pair, the shield currents may inductively couple unequal voltages into the signal cable and be a source of noise. In the case of coaxial cable, the shield current generates a noise voltage by causing an IR drop in the shield resistance, as was shown in Fig. 2-25. But if the shield is to be grounded at only one point, where should that point be? The top drawing in Fig. 3-19 shows an amplifier and the input signal leads with an ungrounded source. Generator V_{G1} represents the potential of the amplifier common terminal above earth ground, and generator V_{G2} represents the difference in ground potential between the two ground points.

Since the shield has only one ground, it is the capacitance between the input leads and the shield that provides the noise coupling. The input shield may be grounded at any one of four possible points through the dotted connections labeled *A*, *B*, *C*, and *D*. Connection *A* is obviously not desirable, since it allows shield noise current to flow in one of the signal

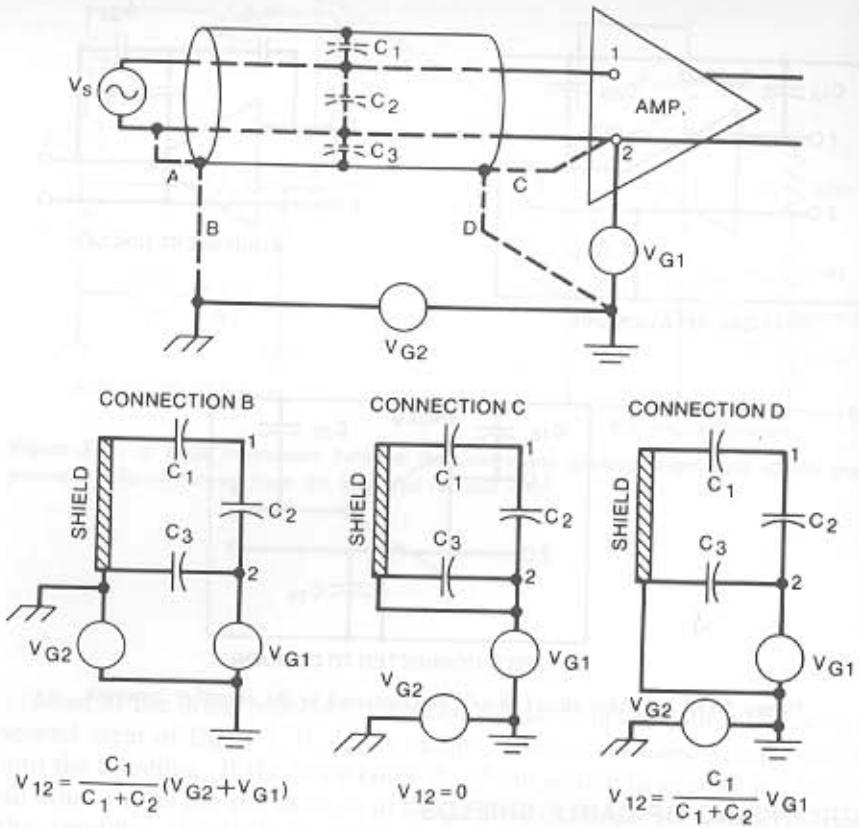

Figure 3-19. *When amplifier is grounded, the best shield connection is C, with shield connected to amplifier common.*

leads. This noise current flowing through the impedance of the signal lead produces a noise voltage in series with the signal.

The three lower drawings in Fig. 3-19 are equivalent circuits for grounding connections B, C, and D. Any extraneous voltage generated between the amplifier input terminals (points 1 and 2) is a noise voltage. With grounding arrangement B, a voltage is generated across the amplifier input terminals due to the generators V_{G2} and V_{G1} and the capacitive voltage divider formed by C_1 and C_2. This connection, too, is unsatisfactory. For ground connection C, there is no voltage V_{12}, regardless of the value of generators V_{G1} or V_{G2}. With ground connection D, a voltage is generated across the amplifier input terminals due to generator V_{G1} and the capacitive voltage divider C_1 and C_2. The only connection that precludes a noise voltage V_{12} is connection C. *Thus, for a circuit with an ungrounded source and a grounded amplifier, the input shield should always be connected to the amplifier common terminal, even if this point is not at earth ground.*

The case of an ungrounded amplifier connected to a grounded source is shown in Fig. 3-20. Generator V_{G1} represents the potential of the source common terminal above the actual ground at its location. The four possible connections for the input cable shield are again shown as the dashed lines labeled A, B, C, and D. Connection C is obviously not desirable since it allows shield noise currents to flow in one of the signal conductors in order to reach ground. Equivalent circuits are shown at the bottom of Fig. 3-20 for shield connections A, B, and D. As can be seen, only connection A produces no noise voltage between the amplifier input terminals. *Therefore, for the case of a grounded source and ungrounded amplifier, the input shield should be connected to the source common terminal, even if this point is not at earth ground.*

Preferred low-frequency shield grounding schemes for both shielded twisted pair and coaxial cable are shown in Fig. 3-21. Circuits A through D are grounded at the amplifier or the source, but not at both ends.

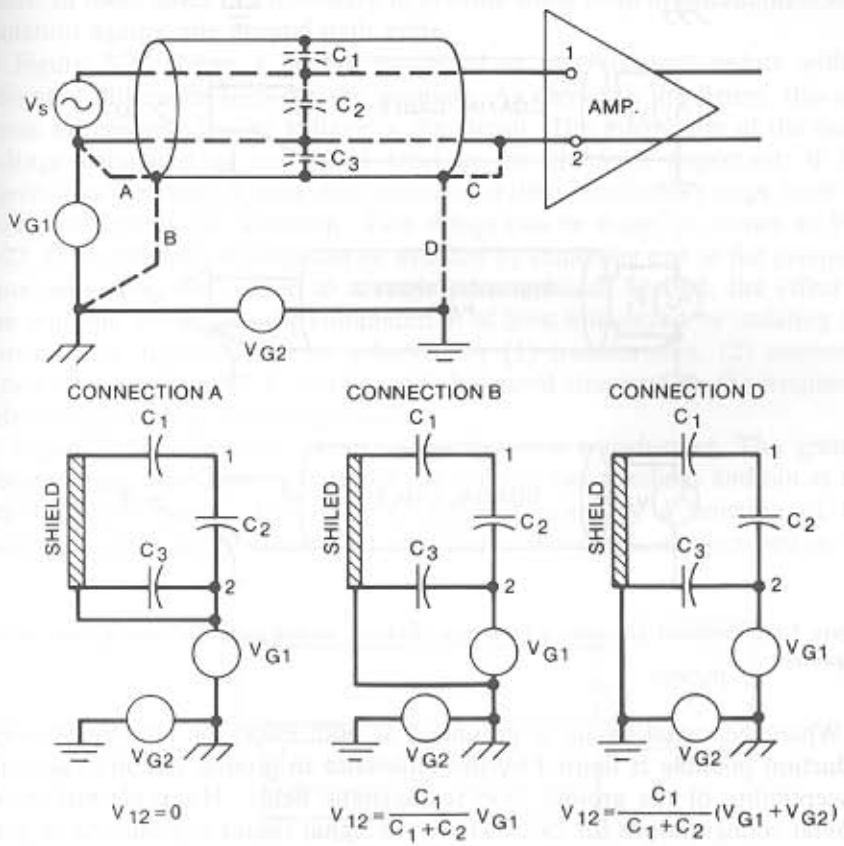

Figure 3-20. *When source is grounded, the best shield connection is A, with shield connected to the source common. The configuration can also be used with a differential amplifier.*

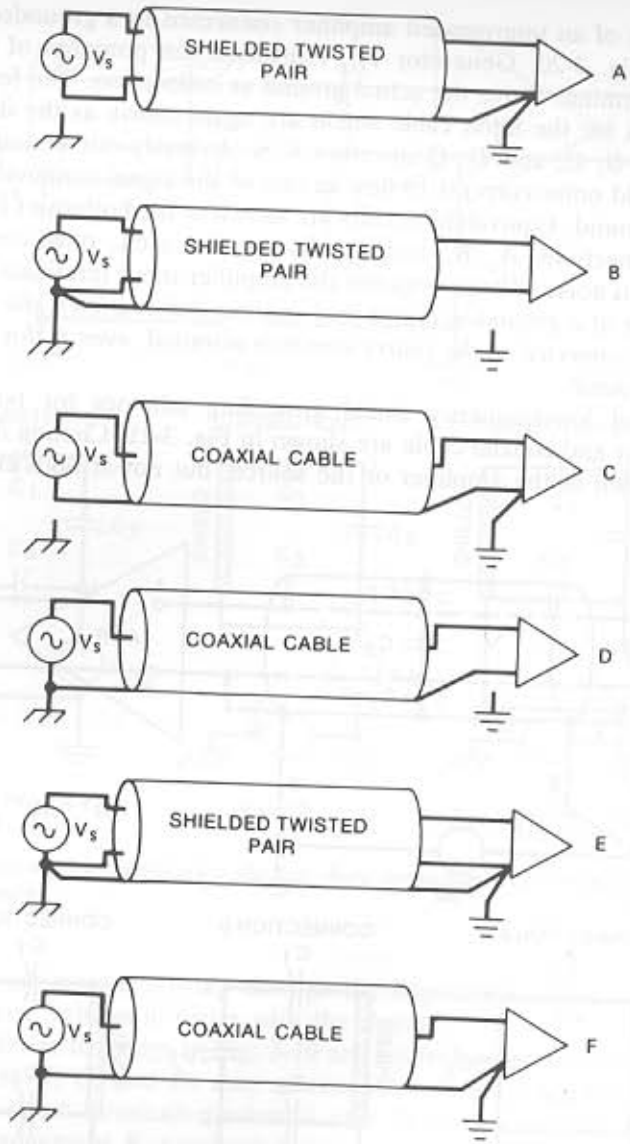

Figure 3-21. *Preferred grounded schemes for shielded, twisted pairs and coaxial cable at low frequency.*

When the signal circuit is grounded at both ends, the amount of noise reduction possible is limited by the difference in ground potential and the susceptibility of the ground loop to magnetic fields. The preferred shield ground configurations for cases where the signal circuit is grounded at both ends are shown in circuits *E* and *F* of Fig. 3-21. In circuit *F* the shield of the coaxial cable is grounded at both ends to force some ground-loop current to

flow through the lower-impedance shield, rather than the center conductor. In the case of circuit *E* the shielded twisted pair is also grounded at both ends to shunt some of the ground-loop current from the signal conductors. If additional noise immunity is required, the ground loop must be broken. This can be done by using transformers, optical couplers, or a differential amplifier.

An indication of the type of performance to be expected from the configurations shown in Fig. 3-21 can be obtained by referring to the results of the magnetic coupling experiment presented in Figs. 2-28 and 2-29.

GROUND LOOPS

Ground loops at times can be a source of noise. This is especially true when the multiple ground points are separated by a large distance and are connected to the ac power ground, or when low-level analog circuits are used. In these cases it is necessary to provide some form of discrimination or isolation against the ground-path noise.

Figure 3-22 shows a system grounded at two different points with a potential difference between the grounds. As shown in the figure, this can cause an unwanted noise voltage in the circuit. The magnitude of the noise voltage compared to the signal level in the circuit is important: if the signal-to-noise ratio is such that circuit operation is affected, steps must be taken to remedy the situation. Two things can be done, as shown in Fig. 3-22. First, the ground loop can be avoided by removing one of the grounds, thus converting the system to a single-point ground. Second, the effect of the multiple ground can be eliminated or at least minimized by isolating the two circuits. Isolation can be achieved by (1) transformers, (2) common-mode chokes, (3) optical couplers, (4) balanced circuitry, or (5) frequency selective grounding (hybrid grounds).

Figure 3-23 shows two circuits isolated with a transformer. The ground noise voltage now appears between the transformer windings and not at the input to the circuit. The noise coupling is primarily a function of the parasitic capacitance between the transformer windings, as discussed in the

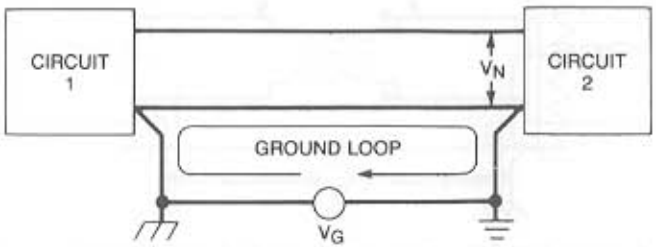

Figure 3-22. *A ground loop between two circuits.*

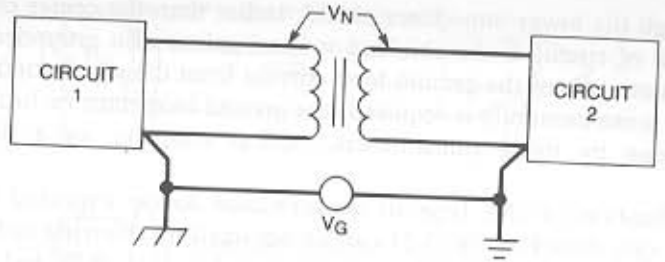

Figure 3-23. *A ground loop between two circuits can be broken by inserting a transformer.*

section on transformers in Chapter 5, and can be reduced by placing a shield between the windings. Although transformers can give excellent results, they do have disadvantages. They are large, have limited frequency response, provide no dc continuity, and are costly. In addition, if multiple signals are connected between the circuits, multiple transformers are required.

In Fig. 3-24 the two circuits are isolated with a transformer connected as a common-mode choke that will transmit dc and differential-mode signals while rejecting common-mode ac signals. The common-mode noise voltage now appears across the windings of the choke and not at the input to the circuit. Since the common-mode choke has no effect on the differential signals being transmitted, multiple signal leads can be wound on the same core without crosstalk. The operation of the common-mode choke is described in the next section.

Optical coupling (optical isolaters or fiber optics), as shown in Fig. 3-25, is a very effective method of eliminating common-mode noise since it completely breaks the metallic path between the two grounds. It is most useful when there are very large differences in voltage between the two grounds, even thousands of volts. The undesired common-mode noise voltage appears across the optical coupler and not across the input to the circuit.

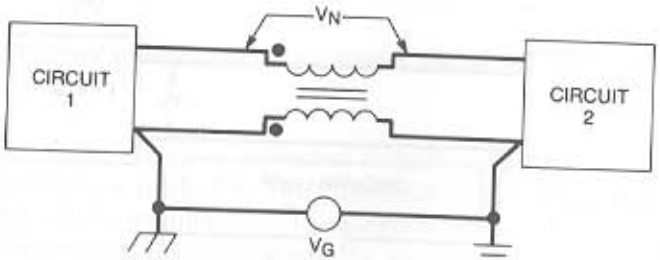

Figure 3-24. *A ground loop between two circuits can be broken by inserting a common-mode choke.*

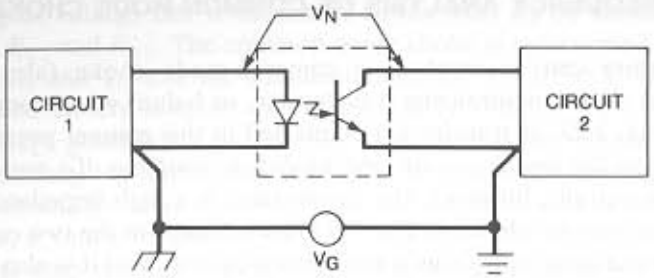

Figure 3-25. *An optical coupler can be used to break the ground loop between two circuits.*

Optical couplers are especially useful in digital circuits. They are less suitable for analog circuits because linearity through the coupler is not always satisfactory. Analog circuits have been designed, however, using optical feedback techniques to compensate for the inherent nonlinearity of the coupler (Waaben, 1975).

Balanced circuits, as shown in Fig. 3-26, provide another way to discriminate against common-mode ground noise voltages. In this case the common-mode voltages induce equal currents in both halves of the balanced circuit, and the balanced receiver responds only to the difference between the two inputs. The better the balance, the larger is the amount of common-mode rejection. As frequency increases, it becomes more and more difficult to achieve a high degree of balance. Balancing is discussed futher in Chapter 4.

When the common-mode noise voltages are at a frequency different from the desired signal, frequency-selective (hybrid) grounding can be used.

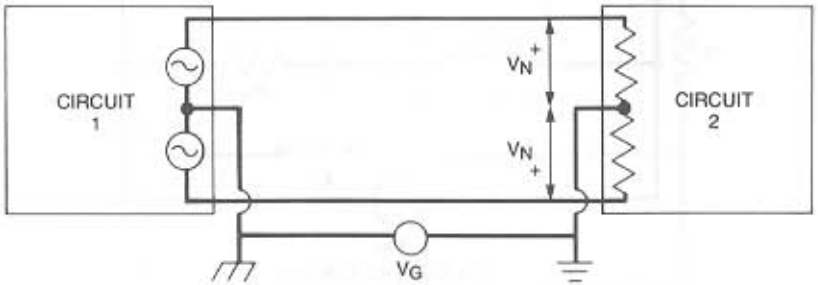

Figure 3-26. *A balanced circuit can be used to cancel out the effect of a ground loop between two circuits.*

LOW-FREQUENCY ANALYSIS OF COMMON-MODE CHOKE

A transformer can be used as a common-mode choke (also called a longitudinal choke, neutralizing transformer, or balun) when connected, as shown in Fig. 3-27. A transformer connected in this manner presents a low impedance to the signal current and allows dc coupling. To any common-mode noise current, however, the transformer is a high impedance.

The signal current shown in Fig. 3-27 flows equally in the two conductors, but in opposite directions. This is the desired current, and it is also known as the differential circuit current or metallic circuit current. The noise currents flow in the same direction along both conductors and are called common-mode currents.

Circuit performance for the common-mode choke of Fig. 3-27 may be analyzed by referring to the equivalent circuit. Voltage generator V_s repre-

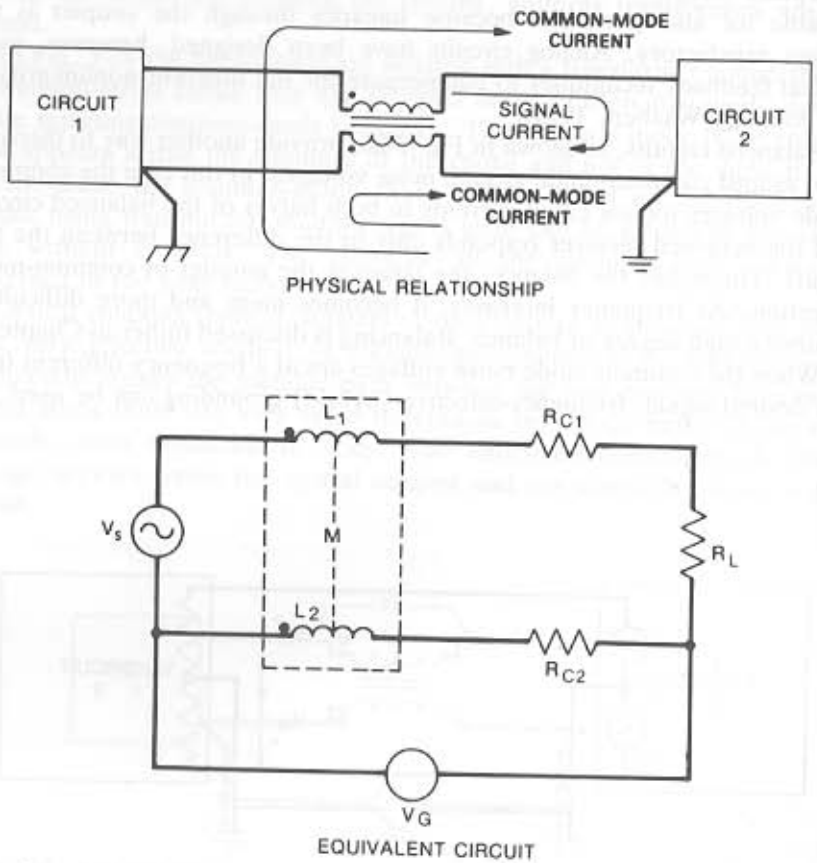

Figure 3-27. *When dc or low-frequency continuity is required, a common-mode choke can be used to break a ground loop.*

sents a signal voltage that is connected to the load R_L by conductors with resistance R_{C1} and R_{C2}. The common-mode choke is represented by the two inductors L_1 and L_2 and the mutual inductance M. If both windings are identical and closely coupled on the same core, then L_1, L_2, and M are equal. Voltage generator V_G represents a common-mode voltage due either to magnetic coupling in the ground loop or to a ground differential voltage. Since the conductor resistance R_{C1} is in series with R_L and of much smaller magnitude, it can be neglected.

The first step is to determine the response of the circuit to the signal voltage V_s, neglecting the effect of V_G. The circuit of Fig. 3-27 can be redrawn, as shown in Fig. 3-28. This figure is similar to the circuit of Fig. 2-22. There it was shown that at frequencies greater than $\omega = 5R_{C2}/L_2$, virtually all the current I_s returned to the source through the second conductor and not through the ground plane. If L_2 is chosen such that the lowest signal frequency is greater than $5R_{C2}/L_2$ rad/s, then $I_G = 0$. Under these conditions the voltages around the top loop of Fig. 3-28 can be summed as follows:

$$V_s = j\omega(L_1 + L_2)I_s - 2j\omega M I_s + (R_L + R_{C2})I_s . \tag{3-8}$$

Remembering that $L_1 = L_2 = M$ and solving for I_s gives

$$I_s = \frac{V_s}{R_L + R_{C2}} = \frac{V_s}{R_L}, \tag{3-9}$$

provided R_L is much greater than R_{C2}. Equation 3-9 is the same that would have been obtained if the choke had not been present. It therefore has no effect on the signal transmission so long as the choke inductance is large enough that the signal frequency ω is greater than $5R_{C2}/L_2$.

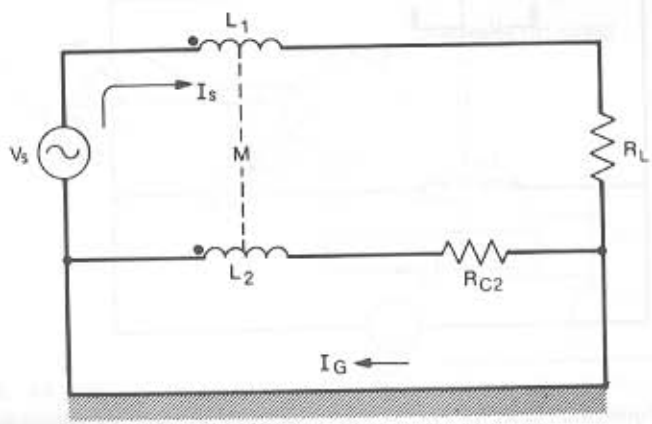

Figure 3-28. *Equivalent circuit for Fig. 3-27 for analysis of response to signal voltage V_s.*

The response of the circuit of Fig. 3-27 to the common-mode voltage V_G can be determined by considering the equivalent circuit shown in Fig. 3-29. If the choke were not present, the complete noise voltage V_G would appear across R_L.

When the choke is present, the noise voltage developed across R_L can be determined by writing equations around the two loops shown in the illustration. Summing voltages around the outside loop gives

$$V_G = j\omega L_1 I_1 + j\omega M I_2 + I_1 R_L . \tag{3-10}$$

The sum of the voltages around the lower loop is

$$V_G = j\omega L_2 I_2 + j\omega M I_1 + R_{C2} I_2 . \tag{3-11}$$

Equation 3-11 can be solved for I_2, giving the following result:

$$I_2 = \frac{V_G - j\omega M I_1}{j\omega L_2 + R_{C2}} . \tag{3-12}$$

Remembering that $L_1 = L_2 = M = L$, and sustituting Eq. 3-12 into Eq. 3-10, and solving for I_1, gives

$$I_1 = \frac{V_G R_{C2}}{j\omega L(R_{C2} + R_L) + R_{C2} R_L} . \tag{3-13}$$

The noise voltage V_N is equal to $I_1 R_L$, and since R_{C2} is normally much less than R_L, we can write

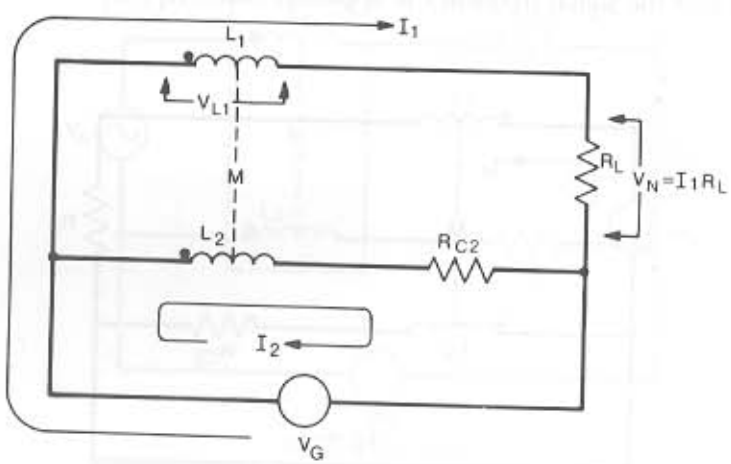

Figure 3-29. *Equivalent circuit for Fig. 3-27 for analysis of response to common-mode voltage V_G.*

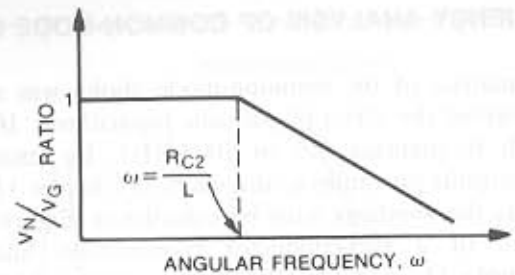

Figure 3-30. *Noise voltage may be significant if R_{C2} is large.*

$$V_N = \frac{V_G R_{C2}/L}{j\omega + R_{C2}/L} . \tag{3-14}$$

A plot of V_N/V_G is shown in Fig. 3-30. To minimize this noise voltage, R_{C2} should be kept as small as possible, and the choke inductance L should be such that

$$L \gg \frac{R_{C2}}{\omega} \tag{3-15}$$

where ω is the frequency of the noise. The choke also must be large enough that any unbalanced dc currents flowing in the circuit does not cause saturation.

The common-mode choke shown in Fig. 3-27 can be easily made; simply wind the conductors connecting the two circuits around a magnetic core, as shown in Fig. 3-31. The signal conductors from more than one circuit may be wound around the same core without the signal circuits interfering (crosstalking). In this way one core can be used to provide a common-mode choke for many circuits.

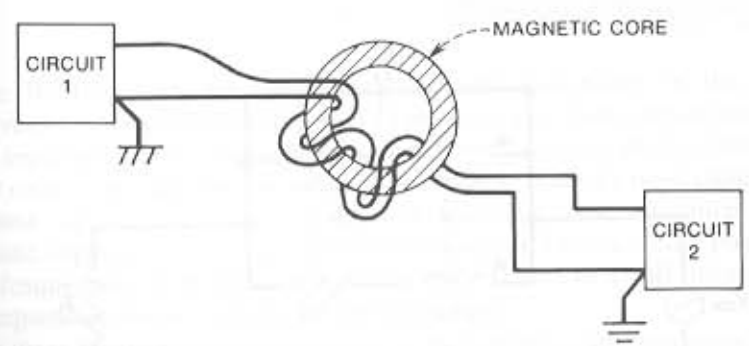

Figure 3-31. *An easy way to place a common-mode choke in the circuit is to wind both conductors around a toroidal magnetic core. A coaxial cable may also be used in place of the conductors shown.*

HIGH-FREQUENCY ANALYSIS OF COMMON-MODE CHOKE

The preceding analysis of the common-mode choke was a low-frequency analysis and neglected the effect of parasitic capacitance. If the choke is to be used at high frequencies (10 to 100 MHz), for example, to block common-mode currents on cables as discussed in Chapter 11, then the stray capacitance across the windings must be considered. Figure 3-32 shows the equivalent circuit of a two-conductor transmission line containing a common-mode choke (L_1 and L_2). R_{C1} and R_{C2} represent the resistance of the windings of the choke plus the cable conductors, and C_s is the stray capacitance across the windings of the choke. Z_L is the common-mode impedance of the cable and V_{CM} is the common-mode voltage driving the cable. In this analysis Z_L is not the differential-mode impedance, but the impedance of the cable acting as an antenna and may vary from about 50 to 350 Ω.

The insertion loss of the choke can be defined as the ratio of the common-mode current without the choke to the common-mode current with the choke. For $R_{C1} = R_{C2} = R$ and $L_1 = L_2 = L$, the insertion loss (IL) of the choke can be written as

$$\mathrm{IL} = Z_L\sqrt{\frac{[2R(1-\omega^2 LC_s)]^2 + R^4(\omega C_s)^2}{[R^2 + 2R(Z_L - \omega^2 LC_s Z_L)]^2 + [2R\omega L + \omega CR^2 Z_L]^2}}. \tag{3-16}$$

Figures 3-33 and 3-34 are plots of Eq. 3-16 for the case where $R_{C1} = R_{c2} = 5\,\Omega$, and $Z_L = 200\,\Omega$. Figure 3-33 shows the insertion loss for a 10-μH choke for various values of shunt capacitance, and Fig. 3-34 shows the insertion loss for a choke with 5 pF of shunt capacitance and various values of inductance. As can be seen from these two figures, the insertion loss

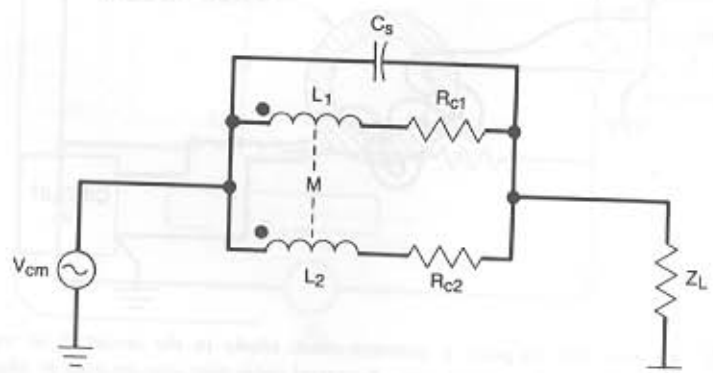

Figure 3-32. *Equivalent circuit of a common-mode choke with parasitic shunt capacitance C_s.*

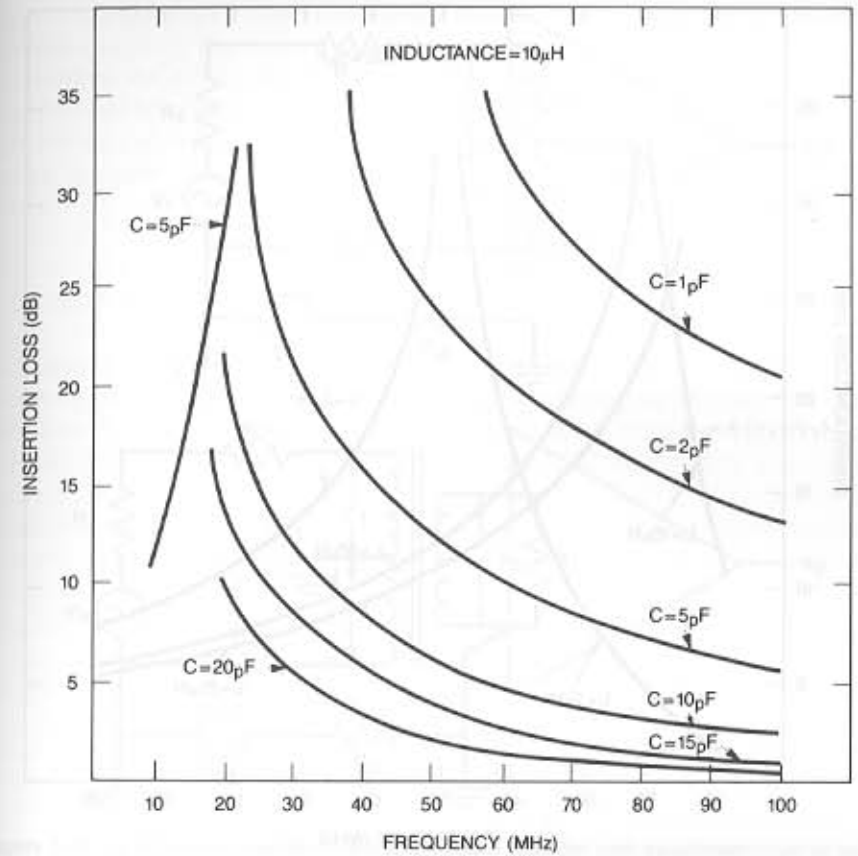

Figure 3-33. *Insertion loss of a 10-μH common-mode choke with various values of shunt capacitance.*

above 70 MHz does not vary much with the inductance of the choke, however, it varies considerably as a function of the shunt capacitance. *The most important parameter in determining the performance of the choke is the shunt capacitance and not the value of inductance.* Actually most chokes used in these applications are beyond self-resonance. The presence of the parasitic capacitance severely limits the maximum insertion loss possible at high frequencies. It is difficult to obtain more than 6 to 12 dB insertion loss at frequencies above 30 MHz by this technique.

At these frequencies the choke can be thought of as an open circuit to the common-mode noise currents. The total common-mode noise current on the cable is therefore determined by the parasitic capacitance, not the inductance of the choke.

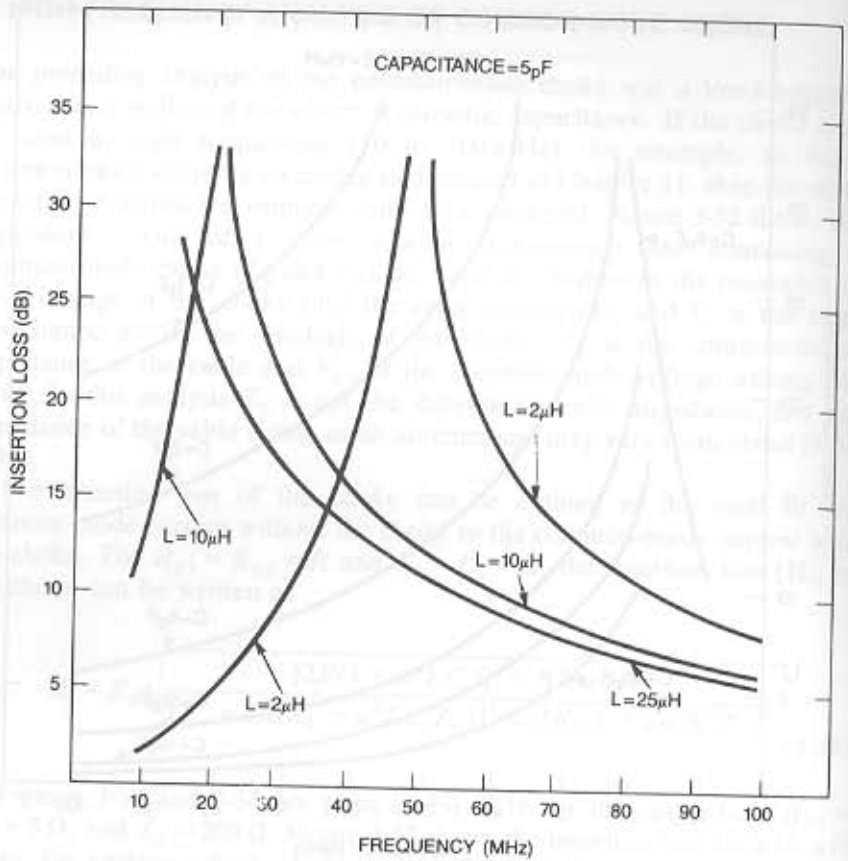

Figure 3-34. *Insertion loss of various inductance common-mode chokes with 5 pF of shunt capacitance.*

DIFFERENTIAL AMPLIFIERS

A differential (or balanced-input) amplifier may be used to decrease the effect of a common-mode noise voltage. This is shown in the upper drawing of Fig. 3-35, where V_G is the common-mode ground noise voltage. The differential amplifier has two input voltages V_1 and V_2, and the output voltage is equal to the amplifier gain (A) times the difference in the two input voltages, $V_0 = A(V_1 - V_2)$.

The lower drawing of Fig. 3-35 shows how a single-ended (or unbalanced) amplifier can be used to simulate the performance of a true balanced amplifier. The transformer primary has a grounded center tap, and the voltages across the two halves are V_1 and V_2. The secondary voltage (assuming a 1:1 turns ratio) is equal to $V_1 - V_2$. Amplifier output again is equal to the gain times this voltage difference, duplicating the balanced amplifier output.

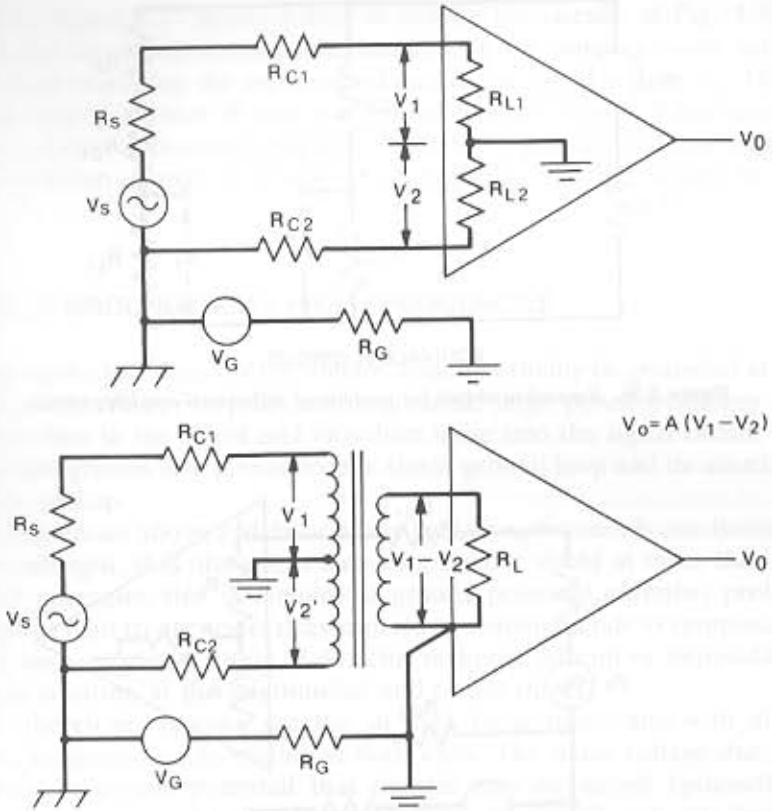

Figure 3-35. *A differential amplifier—or a single-ended amplifier with transformer—can be used to reduce the effects of a common-mode noise voltage.*

The response of either circuit in Fig. 3-35 to the noise voltage can be determined from the equivalent circuit shown in Fig. 3-36. For resistance R_{L2} much larger than R_G, the input voltage to the amplifier due to common-mode noise voltage V_G is as follows:

$$V_N = V_1 - V_2 = \left(\frac{R_{L1}}{R_{L1} + R_{C1} + R_s} - \frac{R_{L2}}{R_{L2} + R_{C2}}\right)V_G . \qquad (3\text{-}17)$$

Example 3-2. If in Fig. 3-36, $V_G = 100$ mV, $R_G = 0.01\ \Omega$, $R_s = 500\ \Omega$, $R_{C1} = R_{C2} = 1\ \Omega$, and $R_{L1} = R_{L2} = 10\ \text{k}\Omega$, then from Eq. 3-17, $V_N = 4.6$ mV. If, however, R_{L1} and R_{L2} were 100 kΩ instead of 10 kΩ, then $V_N = 0.5$ mV. This represents an almost 20 dB decrease in the input noise voltage.

From Example 3-2 it is obvious that increasing the input impedance (R_{L1} and R_{L2}) of the differential amplifier decreases the noise voltage coupled into the amplifier due to V_G. From Eq. 3-17 it can be seen that decreasing the source resistance R_s also decreases the noise voltage coupled into the

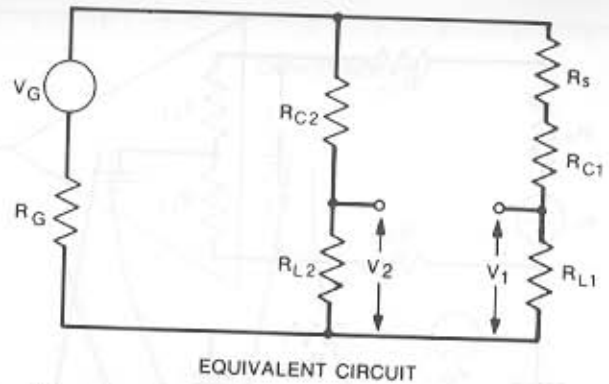

Figure 3-36. *Equivalent circuit for analysis of differential-amplifier circuit.*

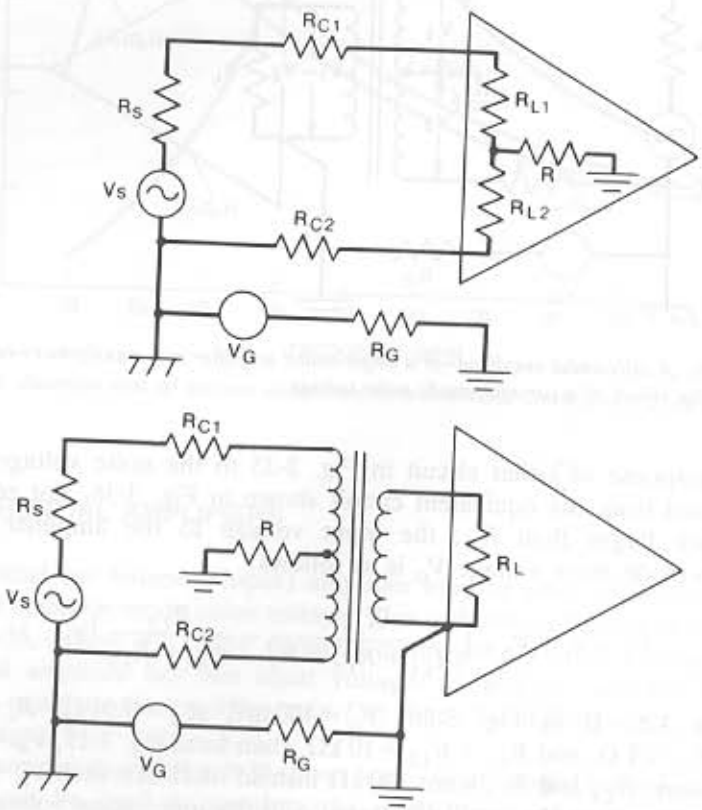

Figure 3-37. *Insertion of resistance R into ground lead decreases the noise voltage.*

amplifier. Figure 3-37 shows a way to modify the circuits of Fig. 3-35 to increase the input impedance of the amplifier to the common-mode voltage V_G, without increasing the input impedance to the signal voltage V_s. This is done by adding resistor R into the ground lead as shown. When using a high-impedance differential amplifier, both the input cable shield and the source common should be grounded at the source as was shown in Fig. 3-21B.

SHIELD GROUNDING AT HIGH FREQUENCIES

At frequencies less than 1 MHz, shields should normally be grounded at one end only. Otherwise, as previously explained, large power-frequency currents can flow in the shield and introduce noise into the signal circuit. The single-point ground also eliminates the shield ground loop and its associated magnetic pickup.

At frequencies above 1 MHz or where cable length exceeds one-twentieth of a wavelength, it is often necessary to ground a shield at more than one point to guarantee that it remains at ground potential. Another problem develops at high frequencies; stray capacitive coupling tends to complete the ground loop, as shown in Fig. 3-38. This makes it difficult or impossible to maintain isolation at the ungrounded end of the shield.

It is therefore common practice at high frequencies, and with digital circuits, to ground cable shields at both ends. The noise voltage due to a difference in ground potential that couples into the circuit (primarily at power frequencies and its harmonics) can usually be filtered out, because there is a large frequency difference between the noise and the signal frequency. At frequencies above 1 MHz the skin effect reduces the coupling due to signal and noise curent flowing on the shield. This skin effect causes the noise current to flow on the outside surface of the shield and the signal current to flow on the inside surface of the shield. The multiple ground also provides a degree of magnetic shielding at higher frequencies when coaxial cable is used.

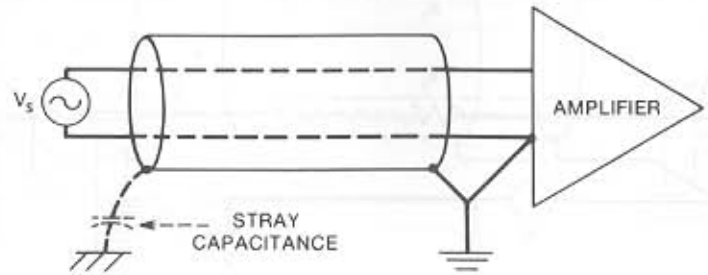

Figure 3-38. *At high frequencies stray capacitance tends to complete the ground loop.*

The characteristics of the circuit shown in Fig. 3-38 can be put to advantage by replacing the stray capacitance with an actual capacitor, thus forming a combination or hybrid ground. At low frequencies a single-point ground exists since the impedance of the capacitor is large. However, at high frequencies the capacitor becomes a low impedance, thus converting the circuit to one having a multiple ground. Such a ground configuration is often useful for circuits that must operate over a very wide frequency range.

GUARD SHIELDS

Noise reduction greater than that obtainable with a differential amplifier can be obtained by using an amplifier with a guard shield. A guard shield is placed around the amplifier and held at a potential which prevents current flow in the unbalanced source impedance. The effect of a guard shield can best be explained by considering an example in which a guard shield is used to cancel the effects of a difference in ground potential.

Figure 3-39 shows an amplifier connected by a shielded twisted pair to a grounded source. V_G is a common-mode voltage due to a difference in ground potentials. V_s and R_s are the differential signal voltage and source resistance, respectively. R_{IN} is the input impedance to the amplifier. C_{1G} and C_{2G} are stray capacitances between the amplifier input terminals and ground, including the cable capacitance. There are two undesirable currents flowing as a result of voltage V_G. Current I_1 flows through resistors R_s and R_1, and capacitance C_{1G}. Current I_2 flows through resistor R_2 and C_{2G}. If each current does not flow through the same total impedance, there will be a differential input voltage to the amplifier. If, however, a guard shield is

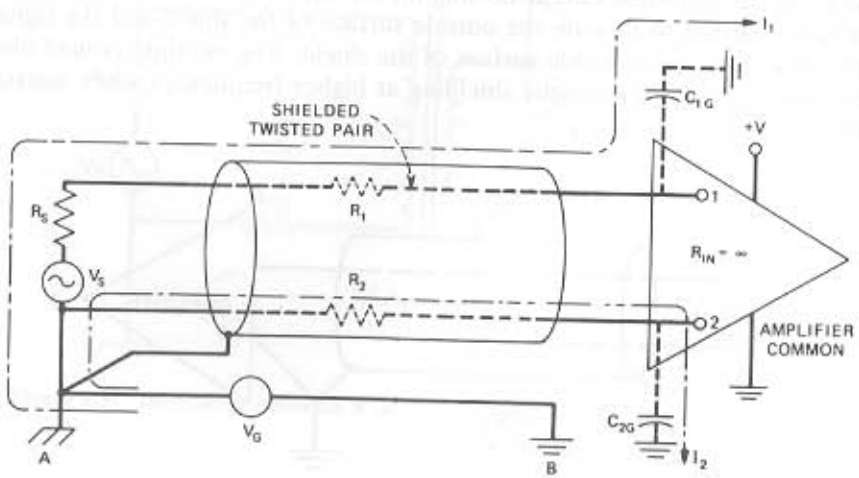

Figure 3-39. *Amplifier and a grounded source are connected by a shielded twisted pair.*

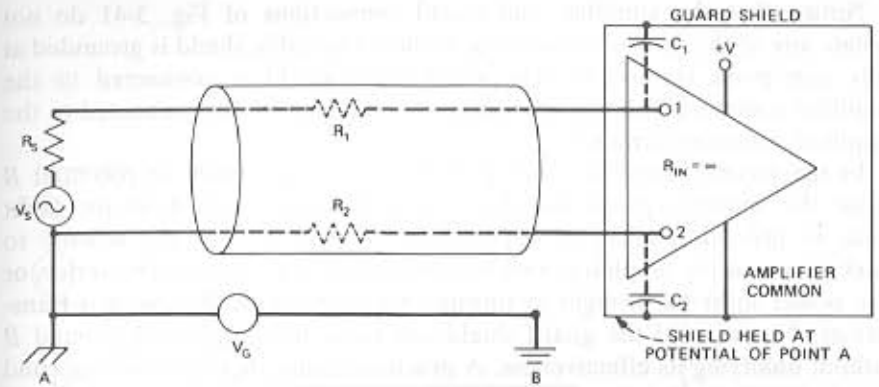

Figure 3-40. *Guard shield at potential of point A eliminates noise currents.*

placed around the amplifier, as shown in Fig. 3-40, and the shield is held at the same potential as point A, currents I_1 and I_2 both become zero because both ends of the path are at the same potential. Capacitances C_1 and C_2 now appear between the input terminals and the shield.

The shield accomplishes the objective of eliminating the differential input noise voltage. Unmentioned, however, has been the problem of how to hold the shield at the potential of point A. One way to do this is shown in Fig. 3-41, where the guard shield is held at the potential of point A by connecting it to the cable shield. The other end of the cable shield is then grounded at point A. This discussion assumes that the source common (lower) terminal is at the same potential as point A. That is, there is no noise voltage generated between point A and the source common. If there is any possibility of a noise voltage being generated between the common terminal of V_s and ground point A, the guard shield should be connected to the source common as illustrated, instead of directly to point A.

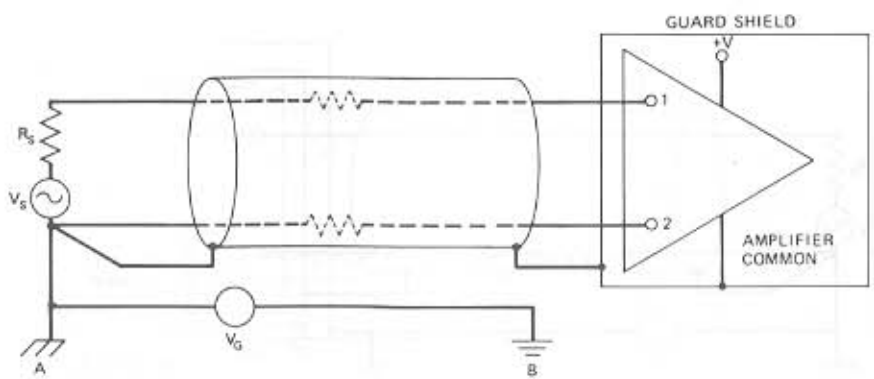

Figure 3-41. *Guard shield is connected to point A through the cable shield.*

Notice that the amplifier and shield connections of Fig. 3-41 do not violate any of the previously described rules. The cable shield is grounded at only one point (point A). The input cable shield is connected to the amplifier common. The shield around the amplifier is also connected to the amplifier common terminal.

In the guarded amplifier of Fig. 3-41, any ground point at potential B inside the amplifier guard shield increases the capacitance from the input leads to ground (unguarded capacitance). Therefore, for the scheme to work, it means the amplifier must be powered by self-contained batteries, or else power must be brought in through an electrostatically shielded transformer. No point of the guard shield can come in contact with ground B without nullifying its effectiveness. A practical circuit therefore has a second shield placed around the guard shield to guarantee the guard's integrity, as shown in Fig. 3-42. This second or external shield is grounded to the local ground, point B, and satisfies the safety requirements.

A guard shield is usually only required when extremely low-level signals are being measured, or when very large common-mode voltages are present and all other noise reduction techniques have also been applied to reduce the noise pickup to an absolute minimum. A guard shield may be used around a single-ended amplifier as well as a differential amplifier.

Example 3-3. Consider a numerical example, as illustrated in Fig. 3-43, where $R_1 = R_2 = 0$, $R_s = 2.6\ \text{k}\Omega$, $C_{1G} = C_{2G} = 100\ \text{pF}$, and $V_G = 100\ \text{mV}$ at 60 Hz. The reactance of 100 pF is 26 MΩ at 60 Hz. The differential input noise voltage across the amplifier input terminals without a guard shield can be written as

$$V_N = \left(\frac{R_s + R_1}{R_s + R_1 + Z_{1G}} - \frac{R_2}{R_2 + Z_{2G}} \right) V_G, \tag{3-18}$$

where Z_{1G} and Z_{2G} are the impedance of capacitance C_{1G} and C_{2G},

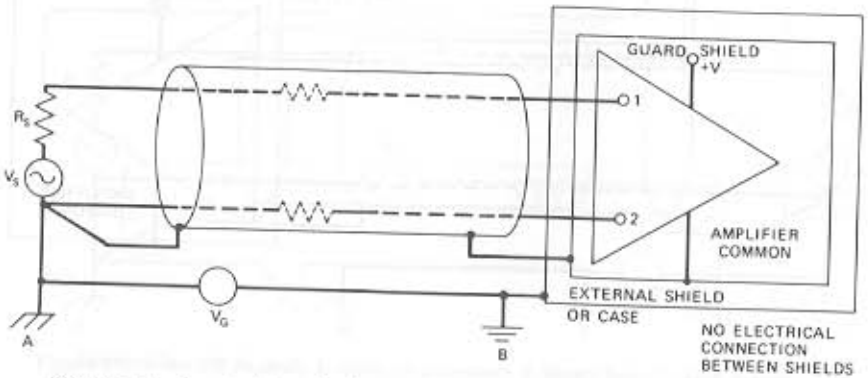

Figure 3-42. *Practical circuit often has a second shield around the guard shield.*

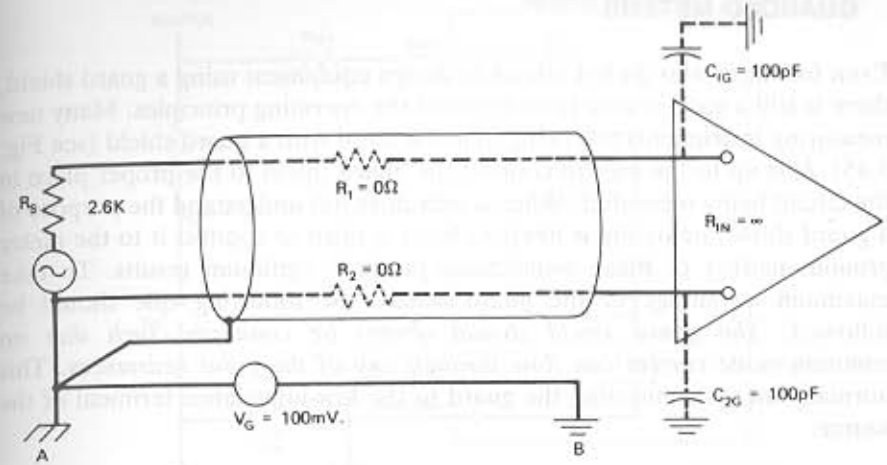

Figure 3-43. *Numerical example to illustrate need for guard shield.*

respectively. Substituting numerical values into Eq. 3-18, the input noise voltage without the guard shield is 10 μV. If the use of the guard shield reduces each line's capacitance to ground to 2 pF, as shown in Fig. 3-44, the differential input noise voltage across the amplifier input terminals with the guard shield in place can still be written as shown in Eq. 3-18, but the input noise voltage is now reduced to 0.2 μV, a 34 dB improvement. The 2-pF capacitance to ground is due to the fact that the guard shield is not perfect. If it were perfect, there would be no capacitance to ground and the noise voltage would be zero. It should be noted that the noise voltage coupled into the amplifier increases as the frequency of the noise source is increased, since the impedance of C_{1G} and C_{2G} decrease as the frequency is increased.

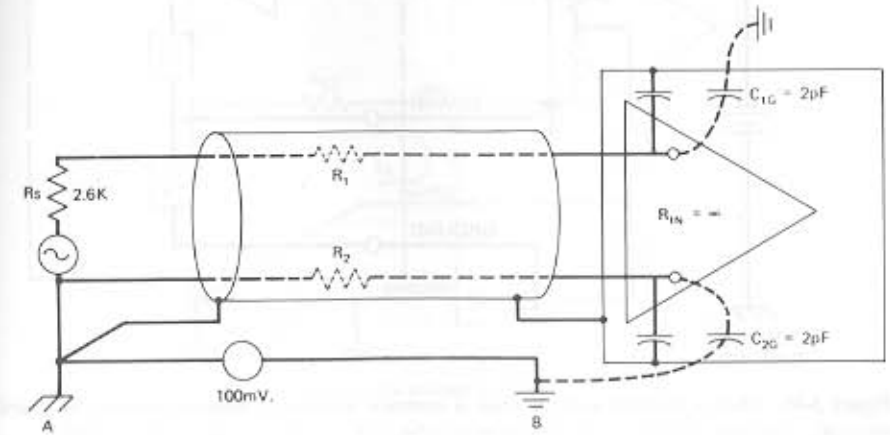

Figure 3-44. *Guard shield reduces line capacitance to ground and therefore noise voltage.*

GUARDED METERS

Even for those who do not intend to design equipment using a guard shield, there is still a good reason to understand the operating principles. Many new measuring instruments are being manufactured with a guard shield (see Fig. 3-45). It is up to the user to connect the guard shield to the proper place in the circuit being measured. When a user does not understand the purpose of a guard shield, he or she is likely to leave it open or connect it to the meter ground; neither of these connections produces optimum results. To take maximum advantage of the guard shield, the following rule should be followed: *The guard shield should always be connected such that no common-mode current can flow through any of the input resistances.* This normally means connecting the guard to the low-impedance terminal of the source.

Example 3-4. Refer to Fig. 3-45. The problem is to measure the voltage across resistor R_s, neither end of which is grounded, with a guarded digital voltmeter. What is the best connection for the guard shield? Five possible ways to connect the guard shield are shown in Figs. 3-46 through 3-50. Voltage V_G is the ground differential voltage, and V_N is the battery noise

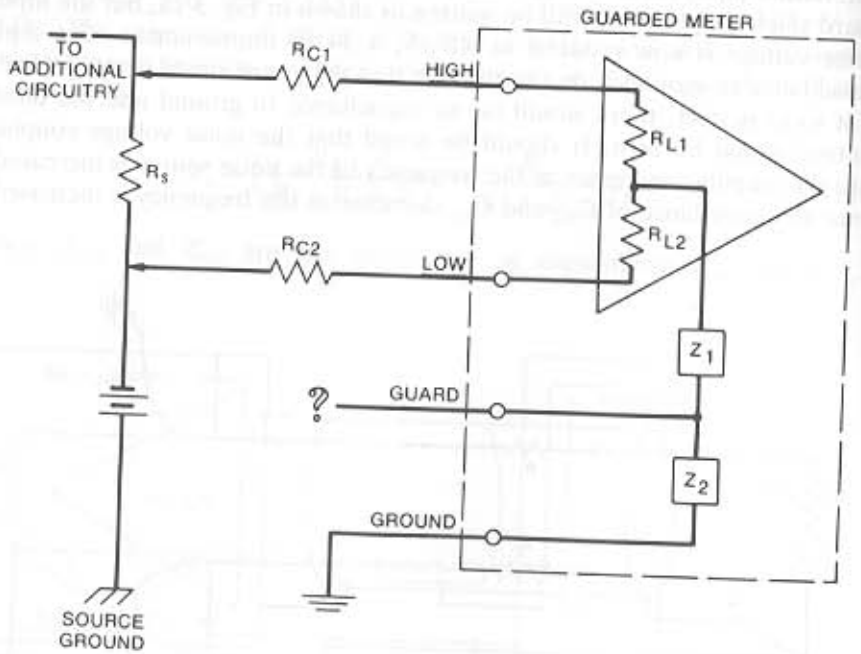

Figure 3-45. *When a guarded meter is used, a common problem is where to connect the guard terminal.*

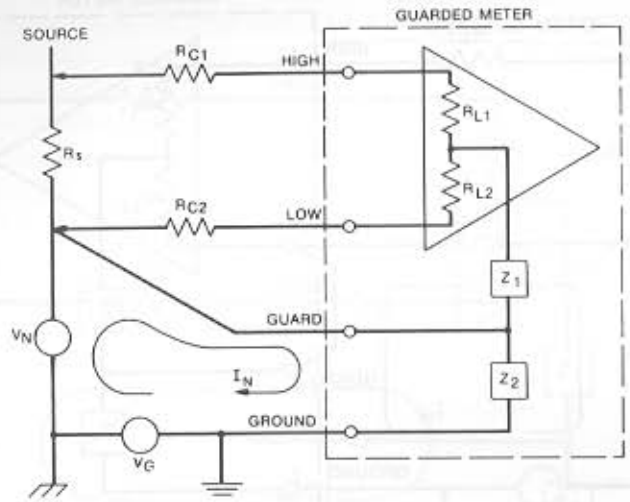

Figure 3-46. *When measuring voltage across R_s, best connection for the guard is to the low-impedance side of R_s; noise current does not affect amplifier.*

voltage. Figure 3-46 shows the best connection, with the guard connected to the low-impedance terminal of the source. Under this condition no noise current flows through the input circuit of the meter.

The connection shown in Fig. 3-47, where the guard is connected to the ground at the source is not as good as the previous connection. Here the noise current from the generator V_G is no problem, but noise current from

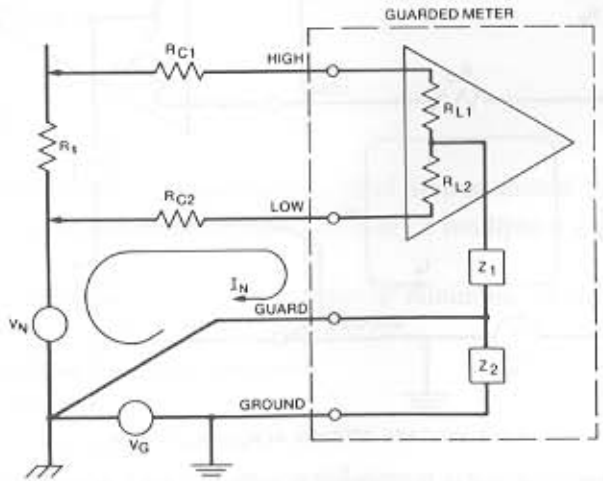

Figure 3-47. *Guard connected to source ground gives no protection against V_N.*

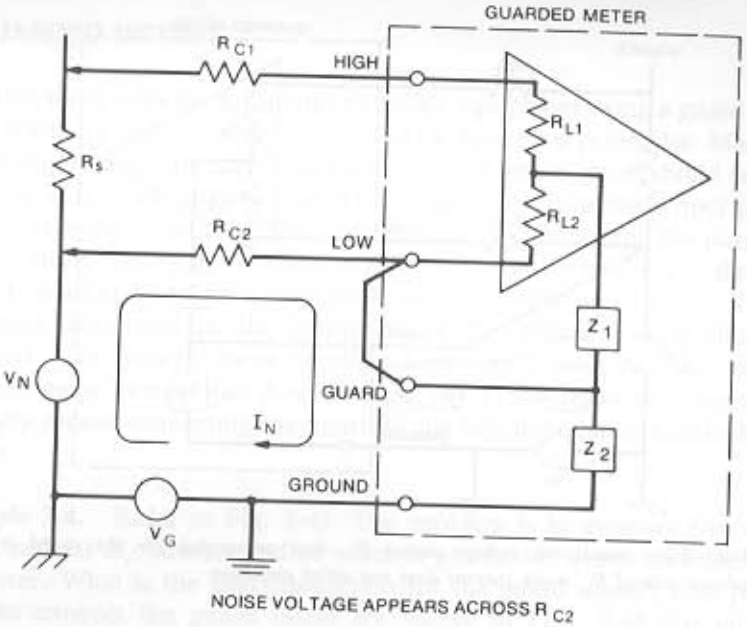

Figure 3-48. *Guard connected to low side of meter allows noise current to flow in line resistance R_{C2}.*

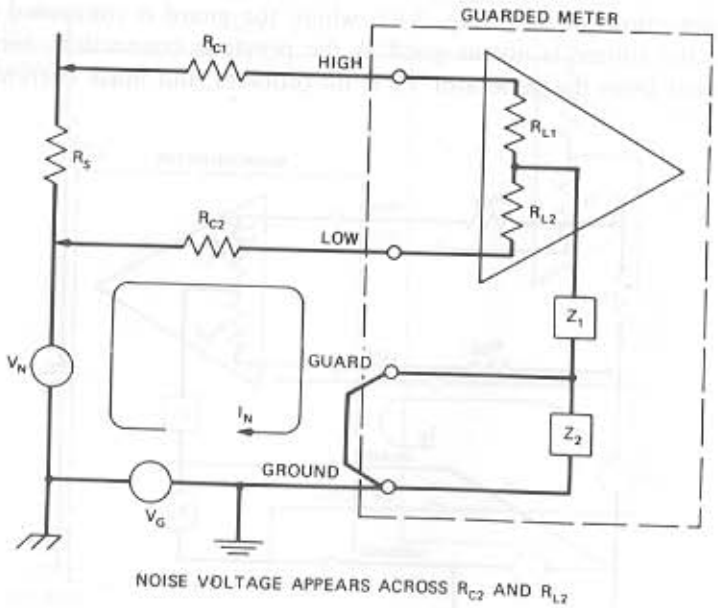

Figure 3-49. *Guard connected to local ground is ineffective; noise current flows through R_{C2}, R_{L2}, and Z_1.*

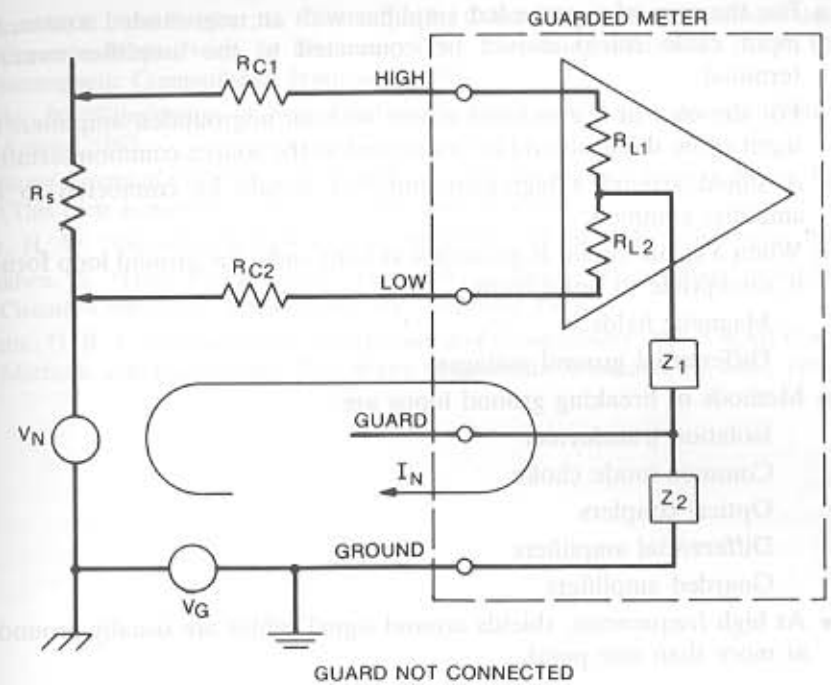

Figure 3-50. *Guard not connected; noise currents due to V_N and V_G flow through R_{C2}, R_{L2}, Z_1, and Z_2.*

V_N flows through impedances R_{C2}, R_{L2}, and Z_1 and causes a noise voltage to be coupled into the amplifier. The connections of Figs. 3-48, 3-49, and 3-50 all allow noise current to flow through the meter input circuit and are therefore undesirable.

SUMMARY

- At low frequencies a single-point ground system should be used.
- At high frequencies and in digital circuitry a multipoint ground system should be used.
- A low-frequency system should have a minimum of three separate ground returns. These should be:
  - Signal ground
  - Noisy ground
  - Hardware ground
- The basic objectives of a good ground system are to minimize the noise voltage from two ground currents flowing through a common impedance.

- For the case of a grounded amplifier with an ungrounded source, the input cable shield should be connected to the amplifier common terminal.
- For the case of a grounded source with an ungrounded amplifier, the input cable shield should be connected to the source common terminal.
- A shield around a high-gain amplifier should be connected to the amplifier common.
- When a signal circuit is grounded at both ends, the ground loop formed is susceptible to noise from:
  - Magnetic fields
  - Differential ground voltages
- Methods of breaking ground loops are:
  - Isolation transformer
  - Common-mode choke
  - Optical couplers
  - Differential amplifiers
  - Guarded amplifiers
- At high frequencies, shields around signal cables are usually grounded at more than one point.

BIBLIOGRAPHY

Ady, R. "Applying Opto-Isolators" *Electronic Products*, June 17, 1974.

Bell Laboratories. *Physical Design of Electronic Systems*. Vol. 1, Chapter 10 (Electrical Interference) Prentice-Hall, Englewood Cliffs, N.J., 1970.

Brown, H. "Don't Leave System Grounding to Chance." *EDN/EEE*, January 15, 1972.

Buchman, A. S. "Noise Control in Low Level Data Systems." *Electromechanical Design*. September 1962.

Cushman, R. H. "Designer's Guide to Optical Couplers." *EDN*, July 20, 1973.

Denny, H. W. "Grounding for the Control of EMI." Don White Consultants, Germantown, Md., 1983.

Ficchi, R. O. *Electrical Interference*. Hayden Book Co., New York, 1964.

Ficchi, R. O. *Practical Design For Electromagnetic Compatibility*. Hayden Book Co., New York, 1971.

Frederick Research Corp. *Handbook on Radio Frequency Interference*. Vol. 3 (Methods of Electromagnetic Interference Supression). Frederick Research Corp., Wheaton, Md., 1962.

Hewlett-Packard. *Floating Measurements and Grounding*. Application note 123, 1970.

Morrison, R. *Grounding and Shielding Techniques in Instrumentation*. Wiley, New York, 1977.

Nakauchi, E., and Brasher, L. "Technique for Controlling Radiated Emission due to Common-Mode Noise in Electronic Data Processing Systems." IEEE Electromagnetic Compatibility Symposium, 1982.

Nalle, D. "Elimination of Noise in Low Level Circuits." *ISA Journal*, Vol. 12, August, 1965.

National Electrical Code. National Fire Protection Association. Boston, Mass., 1987. (This code is normally reissued every three years.)

Ott, H. W. "Ground—A Path for Current Flow." IEEE EMC Symposium. 1979.

Waaben, S. "High Performance Optocoupler Circuits." International Solid-State Circuits Conference. Philadelphia, Pa., February 1975.

White, D. R. J. *Electromagnetic Interference and Compatibility*. Vol. 3 (EMI Control Methods and Techniques). Don White Consultants, Germantown, Md., 1973.

4 BALANCING AND FILTERING

BALANCING

A balanced circuit is a two-conductor circuit in which both conductors and all circuits connected to them have the same impedance with respect to ground and to all other conductors. The purpose of balancing is to make the noise pickup equal in both conductors, in which case it will be a common-mode signal which can be made to cancel out in the load. Balancing is an often overlooked—though in many cases cost-effective—noise reduction technique, which may be used in conjunction with shielding when noise must be reduced below the level obtainable with shielding alone. In addition it is used, in some applications, in place of shielding as the primary noise reduction technique.

The use of a differential amplifier, as previously shown in Fig. 3-35, was the first step toward a balanced system. The amplifier provided a balanced load, but the source was still unbalanced due to the resistance R_s. Balancing the source with respect to ground completely balances the system, as shown in Fig. 4-1. In the general case two common-mode noise voltages V_{N1} and V_{N2} are shown in series with the conductors. These noise voltages produce noise currents I_{N1} and I_{N2}. The sources V_{s1} and V_{s2} together produce the signal current I_s. The total voltage V_L developed across the load is equal to the following:

$$V_L = I_{N1}R_{L1} - I_{N2}R_{L2} + I_s(R_{L1} + R_{L2}) . \tag{4-1}$$

The first two terms represent noise voltages, and the third term represents the desired signal voltage. If I_{N1} is equal to I_{N2} and R_{L1} is equal to R_{L2}, the noise voltage across the load is equal to zero. Equation 4-1 then reduces to

$$V_L = I_s(R_{L1} + R_{L2}) , \tag{4-2}$$

which represents a voltage due only to the signal current I_s.

In the balanced circuit shown in Fig. 4-2, V_1 and V_2 represent inductive pickup voltages, and current generators. I_1 and I_2 represent noise that is capacitively coupled into the circuit through C_{31} and C_{32}. The difference in ground potential between source and load is represented by V_G. The noise voltage produced between load terminals 1 and 2, due to capacitive coupling, can be determined by referring to Fig. 4-3. Impedances R_1 and R_2

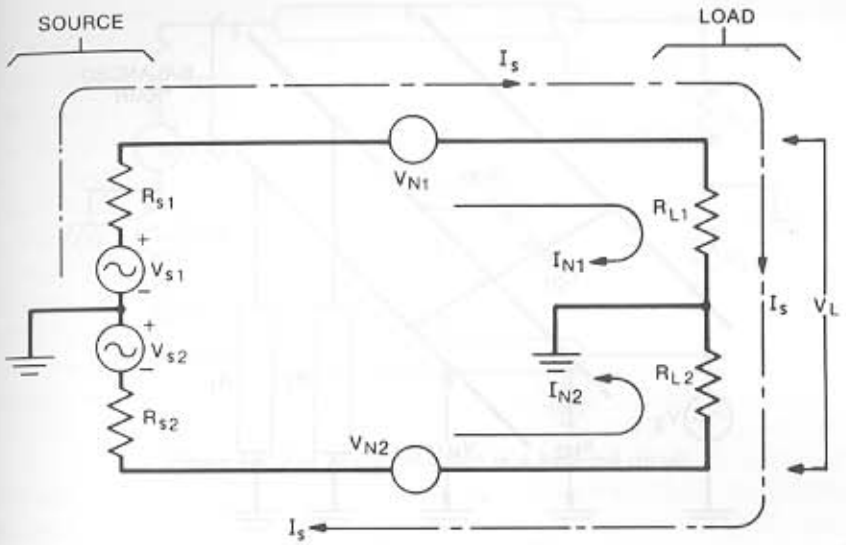

Figure 4-1. *For balanced condition: $R_{s1} = R_{s2}$, $R_{L1} = R_{L2}$, $V_{N1} = V_{N2}$, and $I_{N1} = I_{N2}$.*

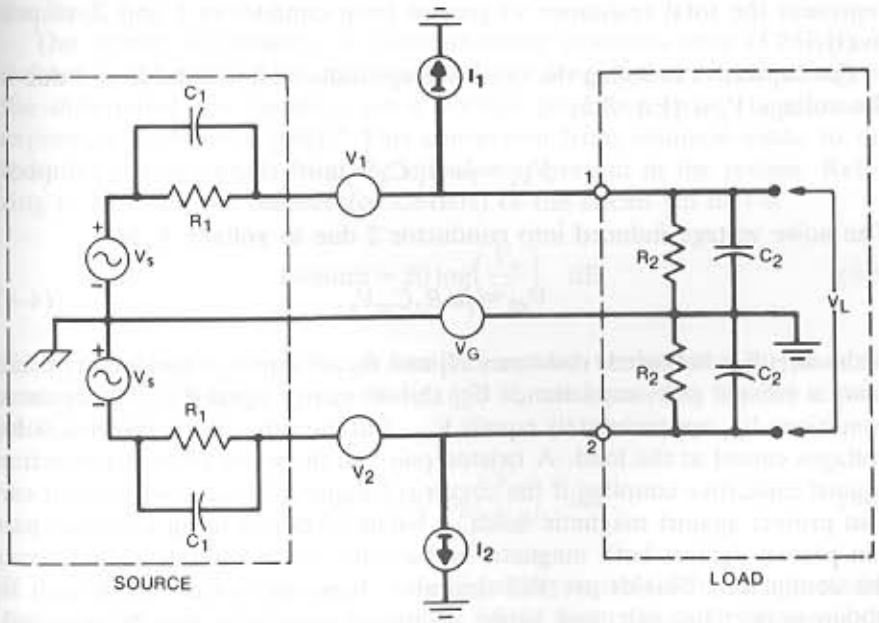

Figure 4-2. *A balanced circuit showing inductive and capacitive noise voltages and a difference in ground potential between source and load.*

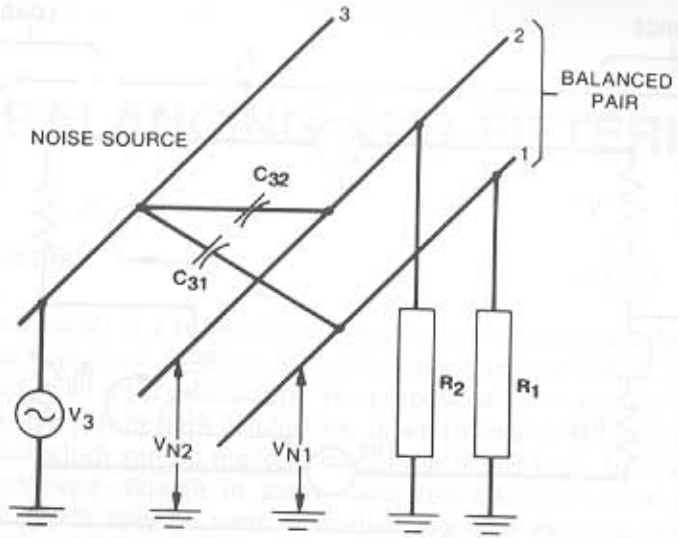

Figure 4-3. *Capacitive pickup in balanced conductors.*

represent the total resistance to ground from conductors 1 and 2, respectively.

For capacitive coupling the noise voltage induced into conductor 1 due to the voltage V_3 is (Eq. 2-2)

$$V_{N1} = j\omega R_1 C_{31} V_3 . \tag{4-3}$$

The noise voltage induced into conductor 2 due to voltage V_3 is

$$V_{N2} = j\omega R_2 C_{32} V_3 . \tag{4-4}$$

If the circuit is balanced, resistance R_1 and R_2 are equal. If conductors 1 and 2 are a twisted pair, capacitance C_{31} should nearly equal C_{32}. Under these conditions V_{N1} approximately equals V_{N2}, and the capacitively coupled noise voltages cancel at the load. A twisted pair can therefore provide protection against capacitive coupling if the circuit is balanced. Since a twisted pair can also protect against magnetic fields, a balanced circuit using a twisted pair can protect against both magnetic and electric fields without a shield over the conductors. Shields are still desirable, however, since it is difficult to obtain perfect balance, and hence additional protection may be required.

Twisted pairs or shielded twisted pairs are usually used as the conductors in a balanced circuit, since a twisted pair is inherently a balanced configuration. A coaxial cable, on the other hand, is inherently an unbalanced configuration. If coaxial cable is to be used in a balanced system, two cables should be used, as shown in Fig. 4-4.

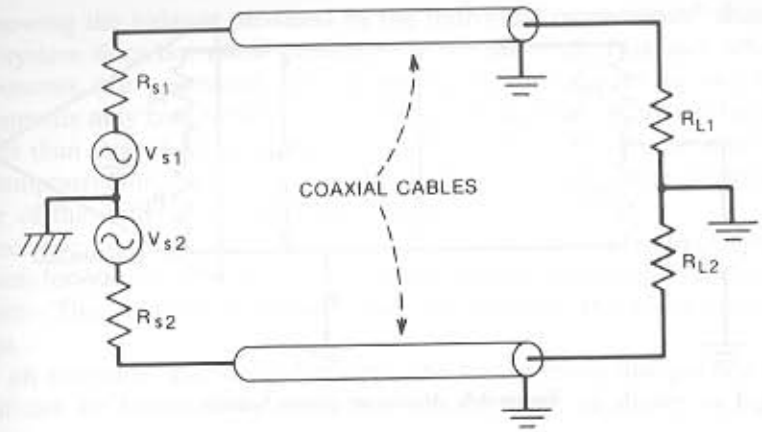

Figure 4-4. *Use of coaxial cables in a balanced circuit.*

It should be noticed in Fig. 4-2 that the difference in ground potential (V_G) between source and load produces equal voltages at terminals 1 and 2 of the load. These voltages cancel, producing no new noise voltage across the load.

The degree of balance, or common-mode rejection ratio (CMRR), is defined as the ratio of the common-mode (or longitudinal) noise voltage to the differential (or metallic) noise voltage produced by it. It is usually expressed in decibels (dB).* This conversion from common-mode to differential voltage results from the unbalances present in the system. Referring to Fig. 4-5, the balance (or CMRR) of the circuit (in dB) is

$$\text{Balance} = 20 \log\left(\frac{V_N}{V_M}\right) \text{ dB} . \tag{4-5}$$

If the source resistances R_s are small compared to the load R_L, then the common-mode voltage V_C equals V_N, and V_C can be used in Eq. 4-6 in place of V_N. Then,

$$\text{Balance} = 20 \log\left(\frac{V_C}{V_M}\right) \text{ dB} . \tag{4-6}$$

If the source and load in Fig. 4-5 are physically separated by an appreciable distance, the balance defined in Eq. 4-6 is normally used because both measurements can be made at the same end of the circuit.

The better the balance, the greater is the noise reduction obtainable. If the balance could be made perfect, no noise could enter the system.

*See Appendix A for discussion of the decibel.

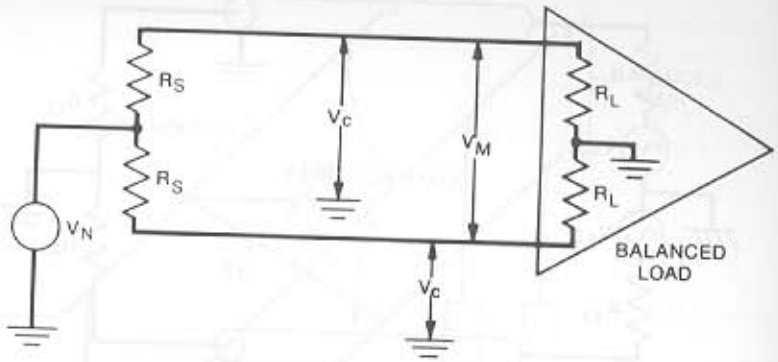

Figure 4-5. *Measuring circuit balance.*

Typically 60–80 dB of balance is reasonable to expect from a well-designed circuit. Balance better than this range is possible, but special cables are usually required and individual circuit trimming may be necessary.

System balance is dependent on source balance, signal lead balance, and load balance, as well as the balance of any stray or parasitic impedances. Both resistive and reactive balances must be obtained between the two input conductors. Therefore the resistances and reactances of each conductor to ground must be equal. The magnitude of any noise coupled into a balanced circuit is a function of the degree of unbalance and is directly proportional to the common-mode noise voltage. Balance is never perfect, and some noise voltage couples into the circuit whenever common-mode noise voltages are present. The common-mode noise voltage can be decreased by proper shielding and grounding, as discussed in the previous chapters, and by eliminating the ground at one end of the circuit.

Example 4-1. A circuit is built with 60 dB of balance. The cables are not shielded, and each cable picks up a common-mode voltage of approximately 300 mV due to electric field coupling. The noise coupled into the load is 60 dB below this or 300 μV. If a grounded shield is now placed around the conductors, the common-mode pick up voltage is reduced to 13 mV. The noise coupled into the amplifier is 60 dB below that, or 13 μV. This example shows that the effects of shielding and balancing are additive. The shielding can be used to reduce the amount of common-mode voltage coupled into the conductors and balancing reduces that portion of the common-mode voltage which is coupled into the load.

Circuit balance also depends on the operating frequency. Normally, the higher the frequency, the harder it is to obtain good balance, because stray capacitance has more effect on circuit balance at high frequency.

Knowing the balance provided by the individual components* that make up a system does not allow prediction of overall system balance when the components are combined. For example, the unbalances in two of the components may complement each other such that the combined balance is greater than that of either of the individual components. On the other hand, the components may be such that the combined balance is less than that of either of the individual components.

One way to guarantee good overall system balance is to specify the balance for each component considerably higher than the desired system balance. This method, however, may not produce the most economical design.

In an otherwise unbalanced system, the transmission line portion of the circuit can be balanced by using two transformers, as shown in Fig. 4-6.

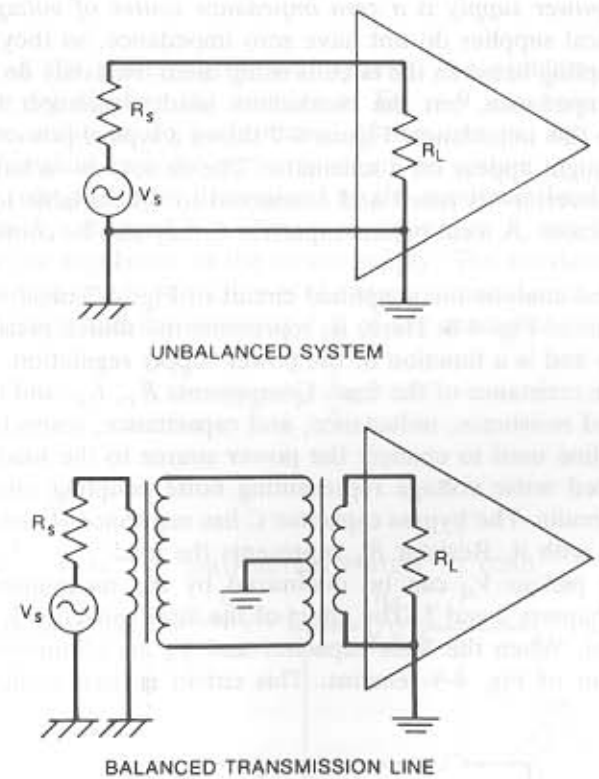

Figure 4-6. *Transmission line portion of a circuit can be balanced by using two transformers.*

*For measuring the balance of individual circuits or components, the procedures of IEEE Standard 455-1976 should be used.

Since the conductors are usually the most susceptible to noise pickup, this system can be very useful in reducing noise. The transformers also break any ground loops and therefore eliminate the noise due to a difference in ground potential between the load and source.

POWER-SUPPLY DECOUPLING

In most electronic systems the dc power-supply and distribution systems are common to many other circuits. It is very important therefore to design the dc power system so that it is not a channel for noise coupling between the circuits connected to it. The object of a power distribution system is to supply a nearly constant dc voltage to all loads under conditions of varying load currents. In addition any ac signals generated by the load should not generate an ac voltage across the dc power bus.

Ideally a power supply is a zero impedance source of voltage. Unfortunately, practical supplies do not have zero impedance, so they represent a source of coupling between the circuits using them. Not only do the supplies have finite impedance, but the conductors used to connect them to the circuit add to this impedance. Figure 4-7 shows a typical power distribution system as it might appear on a schematic. The dc source—a battery, power supply, or converter—is fused and connected to the variable load R_L by a pair of conductors. A local bypass capacitor C may also be connected across the load.

For detailed analysis the simplified circuit of Fig. 4-7 must be expanded into the circuit of Fig. 4-8. Here, R_s represents the source resistance of the power supply and is a function of the power-supply regulation. Resistor R_F represents the resistance of the fuse. Components R_T, L_T, and C_T represent the distributed resistance, inductance, and capacitance, respectively, of the transmission line used to connect the power source to the load. Generator V_N is a lumped noise voltage representing noise coupling into the wiring from other circuits. The bypass capacitor C has resistance R_c and inductance L_c associated with it. Resistor R_L represents the load.

The noise pickup V_N can be minimized by the techniques previously covered in Chapters 2 and 3. The effect of the filter capacitor is discussed in a later section. When the filter capacitor and V_N are eliminated from Fig. 4-8, the circuit of Fig. 4-9 remains. This circuit is used to determine the

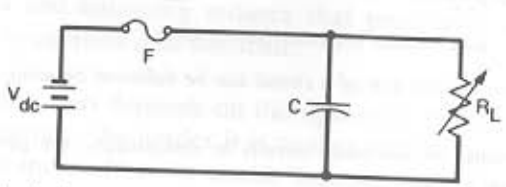

Figure 4-7. *A dc power distribution system, as shown on a schematic.*

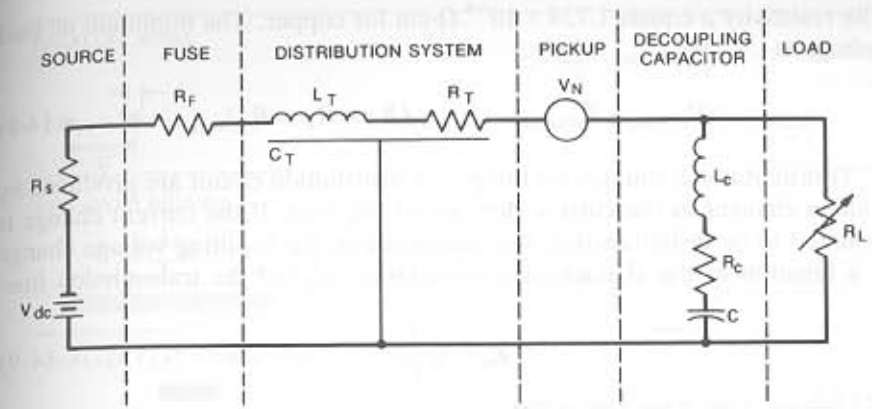

Figure 4-8. *Actual circuit for a dc power distribution system.*

performance of the power distribution system. The problem can be simplified further by dividing the analysis of Fig. 4-9 into two parts. First, determine the static or dc performance of the system, and second, determine the transient or noise performance of the system.

The static voltage drop is determined by the maximum load current and the resistances R_s, R_F, and R_T. The source resistance R_s can be decreased by improving the regulation of the power supply. The resistance R_T of the power distribution line is a function of the cross-sectional area A and length l of the conductors and the resistivity (ρ) of the conductor material,

$$R_T = \rho \frac{l}{A}. \tag{4-7}$$

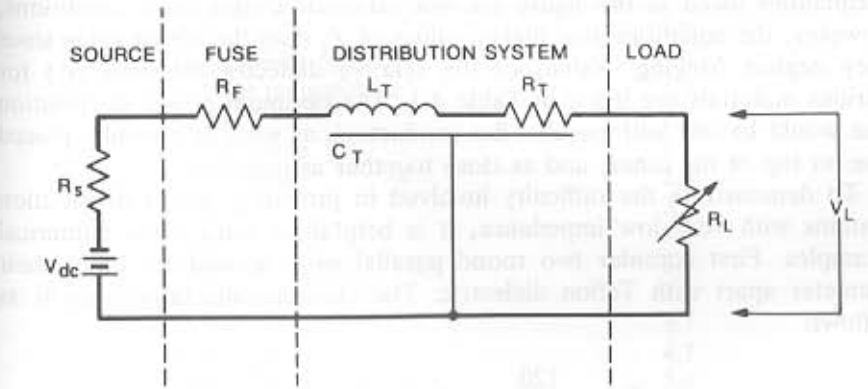

Figure 4-9. *Circuit of Fig. 4-8, less the decoupling capacitor and pickup voltage.*

The resistivity ρ equals 1.724×10^{-6} Ω-cm for copper. The minimum dc load voltage is

$$V_{L(\min)} = V_{dc(\min)} - I_{L(\max)}(R_s + R_F + R_T)_{\max} . \tag{4-8}$$

Transient noise voltages on the power distribution circuit are produced by sudden changes in the current demand of the load. If the current change is assumed to be instantaneous, the magnitude of the resulting voltage change is a function of the characteristic impedance (Z_0) of the transmission line:

$$Z_0 = \sqrt{\frac{L_T}{C_T}} . \tag{4-9}$$

The instantaneous voltage change ΔV_L across the load will then be

$$\Delta V_L = \Delta I_L Z_0 . \tag{4-10}$$

The assumption of an instantaneous change in current is realistic for digital circuits, but not necessarily so for analog circuits. Even in the case of analog circuits, however, the characteristic impedance of the dc power distribution transmission line can be used as a figure of merit for comparing the noise performance of various power distribution systems. For best noise performance, a power transmission line with as low a characteristic impedance as possible is desired—typically a few ohms or less. Equation 4-9 shows that the line should therefore have high capacitance and low inductance.

The inductance can be reduced by using a rectangular cross-sectional conductor instead of a round conductor and by having two conductors as close together as possible. Both of these efforts also increase the capacitance of the line, as does insulating the conductors with a material having a high dielectric constant. Figure 4-10 gives the characteristic impedance for various conductor configurations. These equations can be used even if the inequalities listed in the figure are not satisfied. Under these conditions, however, the equations give higher values of Z_0 than the actual value since they neglect fringing. Values of the relative dielectric constant (ϵ_r) for various materials are listed in Table 4-1. The optimum power distribution line would be one with parallel flat conductors, as wide as possible, placed one on top of the other, and as close together as possible.

To demonstrate the difficulty involved in providing power distribution systems with very low impedance, it is helpful to work some numerical examples. First consider two round parallel wires spaced 1.5 times their diameter apart with Teflon dielectric. The characteristic impedance is as follows:

$$Z_0 = \frac{120}{(2.1)^{1/2}} \cosh^{-1}(1.5) = 80\ \Omega .$$

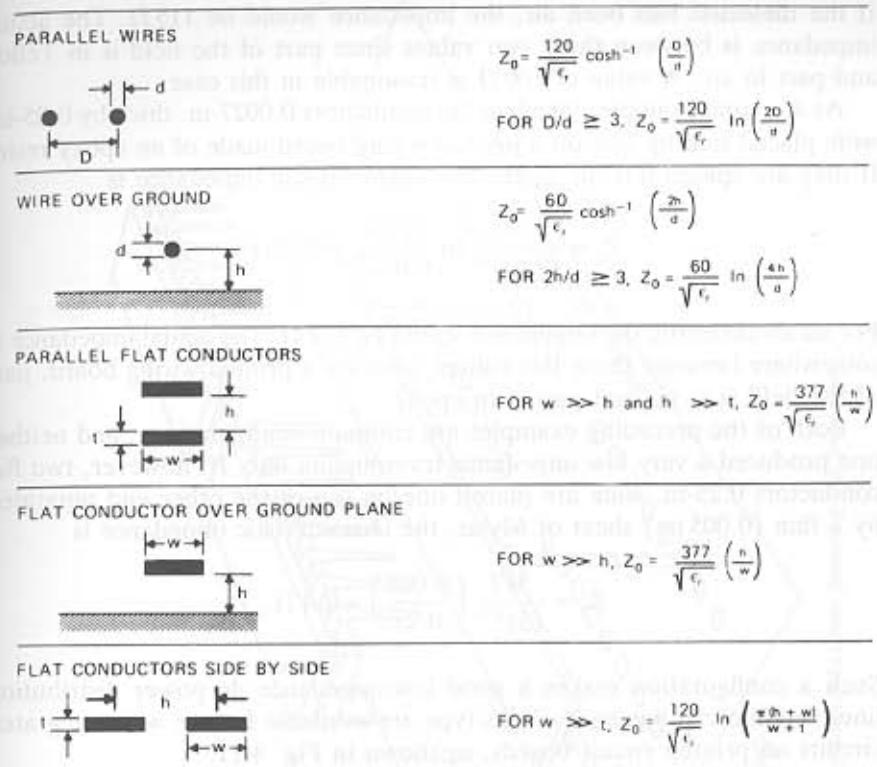

Figure 4-10. *Characteristic impedances for various conductor configurations.*

Table 4-1 Relative Dielectric Constants of Various Materials

Material	ϵ_r
Air	1.0
Polyethylene foam	1.6
Cellular polyethylene	1.8
Teflon	2.1
Polyethylene	2.3
Polystyrene	2.5
Nylon	3.0
Silicon rubber	3.1
Polyvinylchloride (PVC)	3.5
Epoxy resin	3.6
Delrin	3.7
Epoxy glass	4.7
Mylar	5.0
Polyurethane	7.0

If the dielectric had been air, the impedance would be 115 Ω. The actual impedance is between these two values since part of the field is in Teflon and part in air. A value of 100 Ω is reasonable in this case.

As a second example, take two flat conductors 0.0027-in. thick by 0.05-in. wide placed side by side on a printed wiring board made of an epoxy resin. If they are spaced 0.05-in. apart, the characteristic impedance is

$$Z_0 = \frac{120}{(3.6)^{1/2}} \ln \frac{0.1\pi}{0.0527} = 113\,\Omega .$$

For an air dielectric the impedance would be 131 Ω. The actual impedance is somewhere between these two values, since on a printed wiring board, part of the field is in air and part is in epoxy.

Both of the preceding examples are common configurations, and neither one produced a very low impedance transmission line. If, however, two flat conductors 0.25-in. wide are placed one on top of the other and separated by a thin (0.005 in.) sheet of Mylar, the characteristic impedance is

$$Z_0 = \frac{377}{(5)^{1/2}} \left(\frac{0.005}{0.25}\right) = 3.4\,\Omega .$$

Such a configuration makes a good low-impedance dc power distribution line. Commercial bus bars of this type are available for use with integrated circuits on printed circuit boards, as shown in Fig. 4-11.

The difficulty of obtaining a transmission line with sufficiently low impedance usually makes it necessary to place a decoupling capacitor across the power bus at the load to provide a low impedance. Although this is a good practice, a capacitor will not maintain a low impedance at all frequencies because of its series inductance. If the transmission line is designed properly, however, it maintains a low impedance even at high frequencies. For more information on decoupling digital logic circuits, see Chapter 10.

DECOUPLING FILTERS

Since the power supply and its distribution system are not an ideal voltage source, it is a good practice to provide some decoupling at each circuit or group of circuits to minimize noise coupling through the supply system. This is especially important when the power supply and its distribution system are not under the control of the designer of the power-consuming circuit.

Resistor-capacitor and inductor-capacitor decoupling networks can be used to isolate circuits from the power supply, to eliminate coupling between circuits, and to keep power-supply noise from entering the circuit. Neglecting the dashed capacitor, Fig. 4-12 shows two such arrangements. When the R–C filter of Fig. 4-12A is used, the voltage drop in the resistor

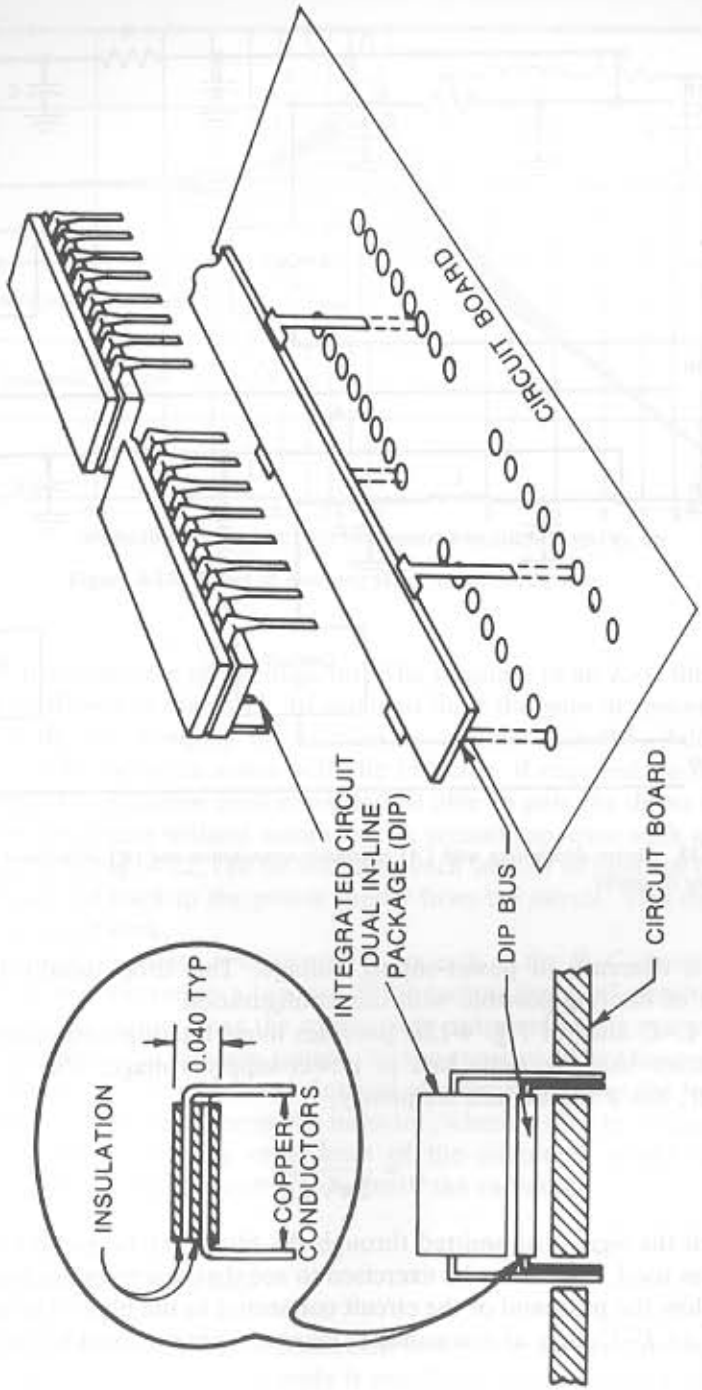

Figure 4-11. *Commercial power distribution bus bars featuring low impedance.*

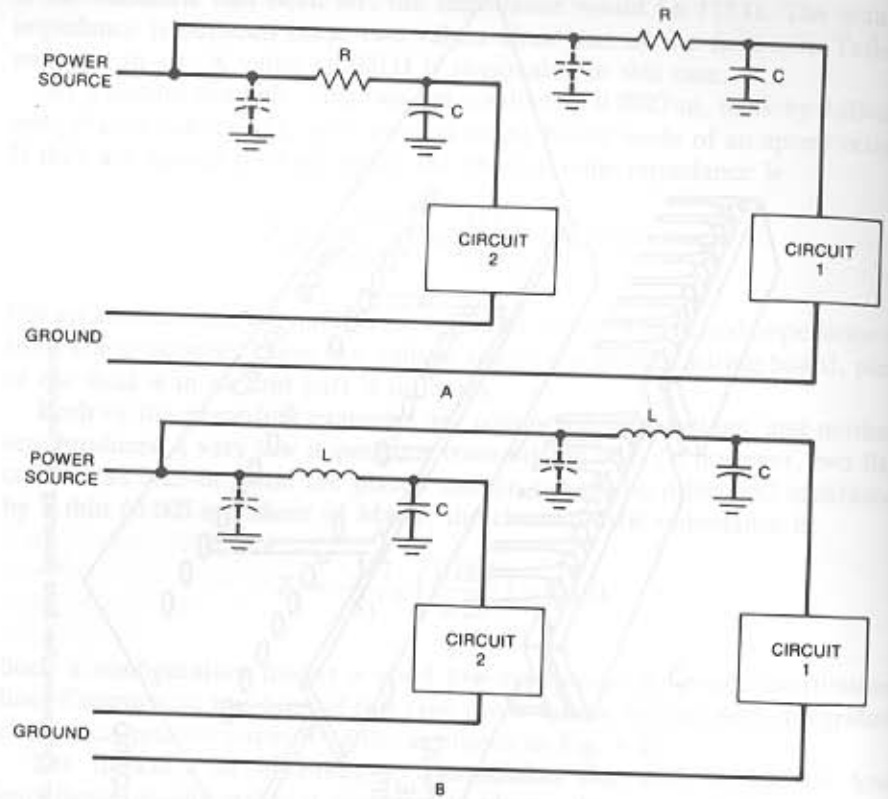

Figure 4-12. *Circuit decoupling with (A) resistance-capacitance and (B) inductance-capacitance decoupling networks.*

causes a decrease in power-supply voltage. This drop usually limits the amount of filtering possible with this configuration.

The L–C filter of Fig. 4-12B provides more filtering—especially at high frequencies—for the same loss in power-supply voltage. The L–C filter, however, has a reasonance frequency,

$$f_r = \frac{1}{2\pi\sqrt{LC}}, \tag{4-11}$$

at which the signal transmitted through the filter may be greater than if no filter was used. Care must be exercised to see that this resonant frequency is well below the passband of the circuit connected to the filter. The amount of gain in an L–C filter at resonance is inversely proportional to the damping factor

$$\zeta = \frac{R}{2}\sqrt{\frac{C}{L}}, \tag{4-12}$$

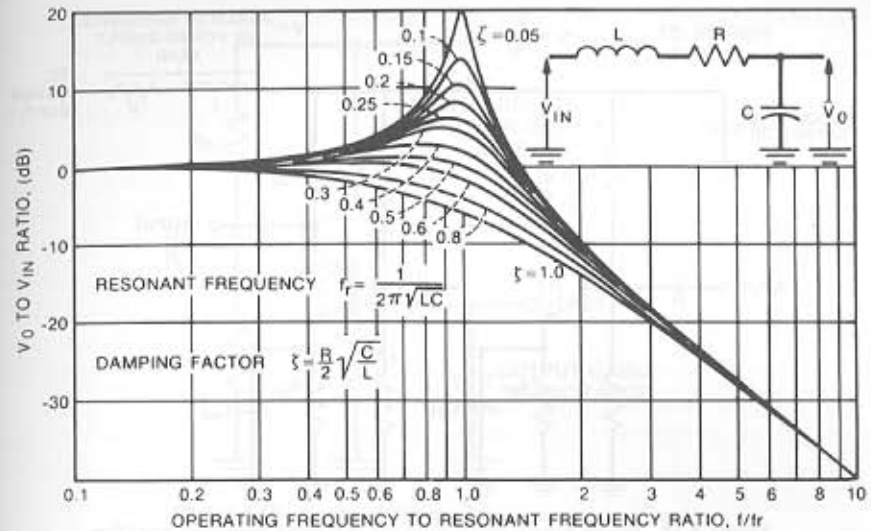

Figure 4-13. *Effect of damping factor on filter response.*

where R is the resistance of the inductor. The response of an L–C filter near resonance is shown in Fig. 4-13. In order to limit the gain at resonance to less than 2 dB, the damping factor must be greater than 0.5. Additional resistance can be added in series with the inductor, if required, to increase the damping. The inductor used must also be able to pass the direct current required by the circuit without saturating. A second capacitor such as those shown dashed in Fig. 4-12, can be added to each section to increase filtering to noise being fed back to the power supply from the circuit. This turns the filter into a pi-network.

When considering noise, a dissipative filter such as the R–C circuit shown in Fig. 4-12A is preferred to a reactive filter, such as the L–C circuit of Fig. 4-12B. In the dissipative filter the undesirable noise voltage is converted to heat and eliminated as a noise source. In the reactive filter, however, the noise voltage is just moved around. Instead of appearing across the load, the noise voltage now appears across the inductor, where it may be radiated and become a problem in some other part of the circuit. It might then be necessary to shield the inductor to eliminate the radiation.

AMPLIFIER DECOUPLING

Even if only a single amplifier is connected to a power supply, consideration of the impedance of the power supply is usually required. Figure 4-14 shows a schematic of a typical two-stage transistor amplifier. When this circuit is analyzed, it is assumed that the ac impedance between the power supply lead and ground is zero. This is hard to guarantee (because the power

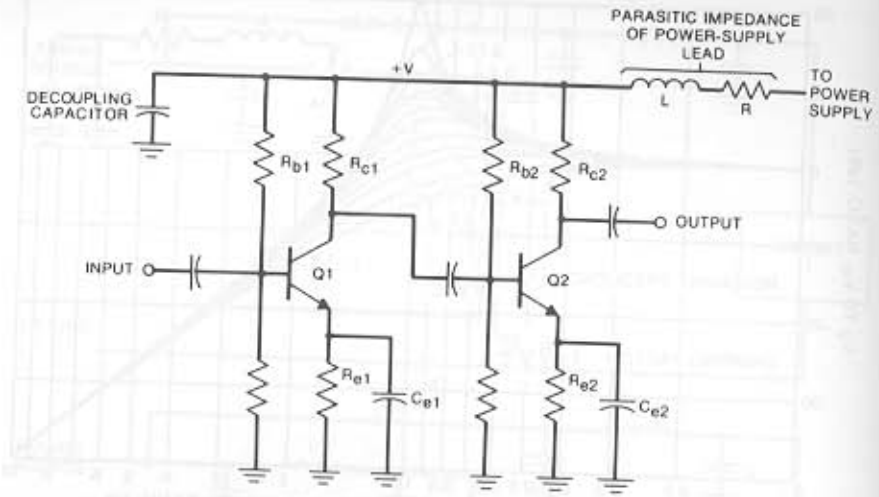

Figure 4-14. *Power supply decoupling for two-stage transistor amplifier.*

supply and its wiring has inductance and resistance) unless a decoupling capacitor is placed between the power supply and ground at the amplifier. This capacitor should serve as a short circuit through the frequency range over which the amplifier is capable of producing gain. This frequency range may be much wider than that of the signal being amplified. If this short circuit is not provided across the power-supply terminals of the amplifier, the circuit can produce an ac voltage gain to the power-supply lead. This signal voltage on the power-supply lead can then be fed back to the amplifier input through resistor R_{b1} and possibly cause oscillation.

DRIVING CAPACITIVE LOADS

An emitter follower, feeding a capacitive load such as a transmission line, is especially susceptible to high-frequency oscillation due to inadequate power-supply decoupling.* Figure 4-15 shows such a circuit. The collector impedance Z_c, consisting of the parasitic inductance of the power supply leads increases with frequency, and the emitter impedance Z_e decreases with frequency due to the cable capacitance. At high frequency the transistor therefore has a large voltage gain to its collector,

$$\text{Voltage gain} \approx \frac{Z_c}{Z_e}. \tag{4-13}$$

*Even with a zero impedance power supply, an emitter follower with a capacitive load can oscillate if improperly designed. See Joyce and Clarke (1961, pp. 264–269) and article by Chessman and Sokol (1976).

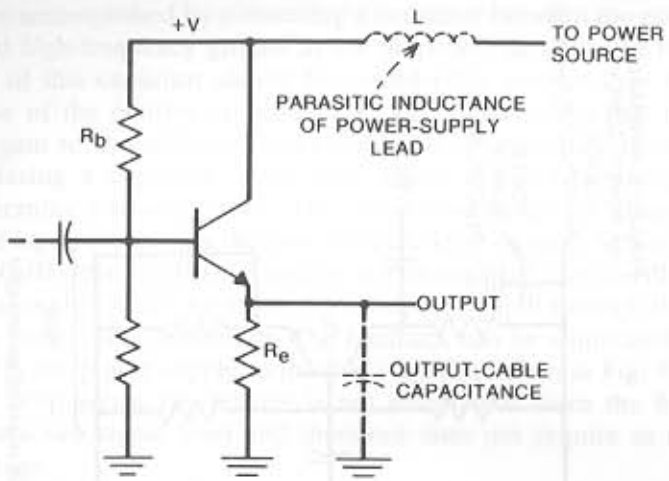

Figure 4-15. *Emitter follower driving a capacitive load.*

This provides ac feedback around the transistor through the base resistance R_b, thus allowing the possibility of oscillation. If previous stages of the same amplifier are connected to the same power line, the feedback can come through the preceding stages and the possibility of oscillation is greater. The oscillation is often a function of the presence or absence of the output cable, since the cable affects the emitter capacitance and hence the high-frequency gain and phase shift through the transistor.

To eliminate the effect of the parasitic lead inductance, a good high-frequency ground must be placed at the power terminal of the amplifier.

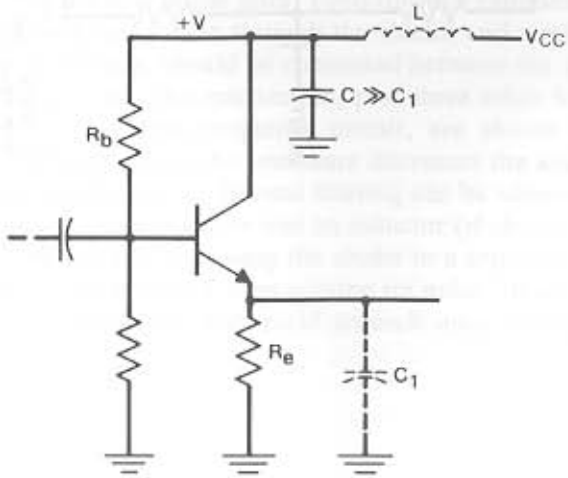

Figure 4-16. *Emitter follower decoupled from power supply.*

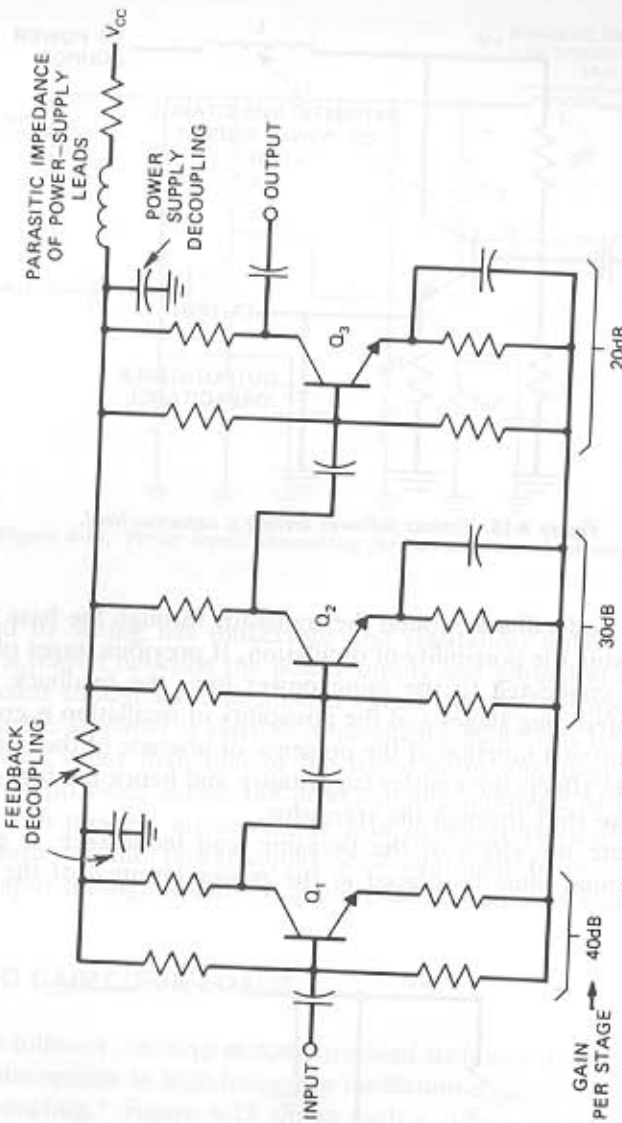

Figure 4-17. *Feedback decoupling between stages of an amplifier.*

This can be accomplished by connecting a capacitor between the power lead and a good high-frequency ground at the amplifier, as shown in Fig. 4-16. The value of this capacitor should be considerably greater than the maximum value of the emitter capacitance C_1. This guarantees that the high-frequency gain to the collector of the transistor is always less than one.

Even placing a capacitor across the amplifier power-supply terminals cannot guarantee zero impedance. Therefore some signal will always be fed back to the input circuit over the power supply lead. In amplifiers with gains less than 60 dB, this feedback is usually not enough to cause oscillation. In higher gain amplifiers this feedback from output to input through the power supply can often cause oscillation. The feedback can be eliminated with an R–C filter in the power supply to the first stage, as shown in Fig. 4-17. The dc voltage drop across the resistor is not detrimental since the first stage operates at a low signal level and therefore does not require as much dc supply voltage.

A similar effect occurs when operational amplifiers are driving capacitive loads. This is the result of the pole produced and the amplifiers' output impedance. For further discussion, see Graeme (1971, pp. 219–222).

HIGH-FREQUENCY FILTERING

Metallic enclosures are often used as shields to prevent noisy, or high-frequency, circuits from radiating noise. For these shields to be effective, all leads entering or leaving the shielded enclosure should be filtered to prevent them from conducting noise out of the shield. At audio frequencies, normal decoupling filters such as those previously described for power supplies are satisfactory. However, at high frequencies, special care must be taken to guarantee the effectiveness of the filter. Feed-through capacitors* should be used where the conductor passes through the shield, and a mica or ceramic capacitor, with short leads, should be connected between the conductor and ground at the circuit end. This connection, plus three other ways to filter a power-supply lead to a high-frequency circuit, are shown in Fig. 4-18. Shielding the conductor inside the enclosure decreases the amount of noise picked up by the conductor. Additional filtering can be obtained by using a C–L–C pi-filter with two capacitors and an inductor (rf choke). This pi-filter can be further improved by enclosing the choke in a separate shield, inside the primary shield, to prevent it from picking up noise. In all the filters the lead lengths on the capacitors and shield grounds must be kept as short as possible.

*See Chapter 5 for a discussion of feed-through capacitors.

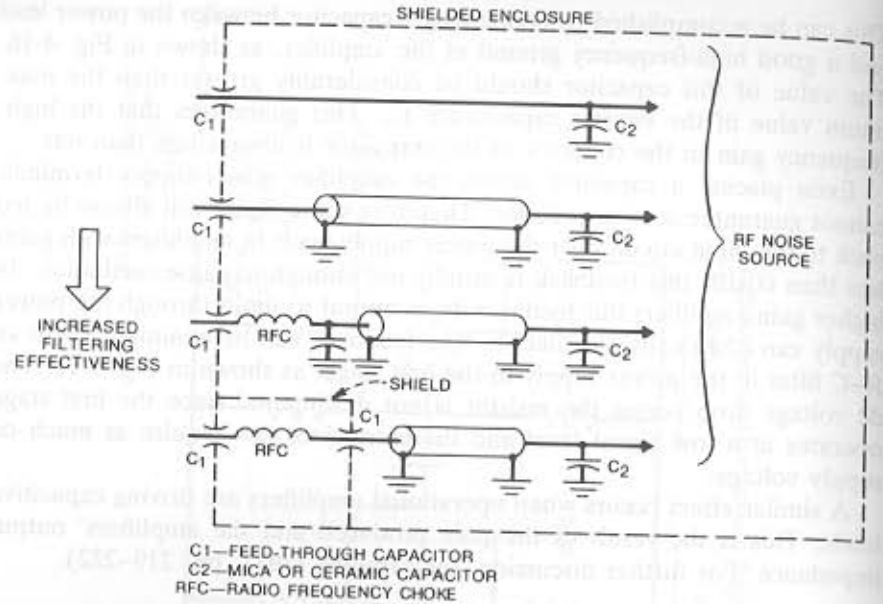

Figure 4-18. *Various high-frequency lead-filtering methods. Effectiveness increases from top toward bottom.*

SYSTEM BANDWIDTH

One simple, but often overlooked, method of minimizing noise in a system is to limit the system bandwidth to that required by the signal. Use of a circuit bandwidth greater than that required by the signal allows additional noise frequencies to enter the circuit. The same principle applies in the case of digital logic circuits. High-speed logic is much more likely to generate and be susceptible to, high-frequency interference than its lower-speed counterpart (see Chapter 11).

MODULATION AND CODING

The susceptibility of a system to interference is a function not only of the shielding, grounding, and so on, but also of the coding or modulating scheme used for the signal. Modulation systems such as amplitude, frequency, and phase have inherent noise immunity. For example, frequency modulation is very insensitive to amplitude noise disturbances. Digital techniques such as pulse amplitude, pulse width, and pulse repetition frequency coding may be used to increase noise immunity. The noise advantages of various coding and modulation schemes are adequately

covered in the literature (Panter, 1965; Schwartz, 1970; and Schwartz et al. 1966) and are not repeated here.

SUMMARY

- In a balanced system both resistive and reactive balance must be maintained.
- The greater the degree of balance, the less noise that will couple into the system.
- Balancing can be used with shielding to provide additional noise reduction.
- The lower the characteristic impedance of a dc power distribution circuit, the less the noise coupling over it.
- Since most dc power buses do not provide a low impedance, a decoupling capacitor should be used at each load.
- From a noise point of view, a dissipative filter is preferred to a reactive filter.
- The bandwidth of a system should be limited to that required to transmit the signal in order to minimize noise.

BIBLIOGRAPHY

Buchman, A. S. "Noise Control in Low Level Data Systems." *Electromechanical Design*, September 1962.

Chessman, M., and Sokal, N. "Prevent Emitter-Follower Oscillation." *Electronic Design*, June 21, 1976.

Costa, D. P. "RFI Suppression, Part II." *Electromechanical Design*. Vol. 11, December, 1967.

Ficchi, R. O. *Practical Design for Electromagnetic Compatibility*. Hayden Book Co., New York, 1971.

Graeme, J. G., Tobey, G. E., and Huelsman, L. P. *Operational Amplifiers*. McGraw-Hill, New York, 1971.

Guzik, S. W., and McLellan, D. W. "A Proposed Standard Method of Measurement of Longitudinal Balance of Telephone System Components." National Telecommunications Conference. San Diego, Calif., 1974.

Joyce, M. V., and Clarke, K. K. *Transistor Circuit Analysis*. Addison-Wesley, Reading, Mass., 1961.

Maul, L. "ECL 10,000 Layout and Loading Rules." *EDN*, August 1973.

Maul, L. "Use ECL for Your High-Speed Designs." *EDN*, July 20, 1973.

Nalle, D. "Elimination of Noise in Low Level Circuits." *ISA Journal*, Vol. 12, August 1965.

Panter, P. F. *Modulation, Noise, and Spectral Analysis*. McGraw-Hill, New York, 1965.

Schwartz, M. *Information Transmission, Modulation and Noise*. 2nd ed. McGraw-Hill, New York, 1970.

Schwartz, M., Bennett, W. R., and Stein, S. *Communication Systems and Techniques*. McGraw-Hill, New York, 1966.

White, D. R. J. *Electromagnetic Interference and Compatibility*. Vol. 3 (EMI Control Methods and Techniques). Don White Consultants, Germantown, Md., 1973.

5 PASSIVE COMPONENTS

Since actual components are not "ideal," their characteristics deviate from those of the theoretical components.* Understanding these deviations is important in determining the proper application of various components. This chapter is devoted to those characteristics of passive electronic components that affect their noise performance or their use in noise reduction circuitry.

CAPACITORS

Capacitors are most frequently categorized by the dielectric material from which they are made. Different types of capacitors have characteristics that make them suitable for certain applications but not for others. An actual capacitor is not a pure capacitance, but it also has both resistance and inductance, as shown in the equivalent circuit in Fig. 5-1. The inductance L is due to leads as well as the capacitor stucture. Resistance R_2 is the parallel leakage and a function of the volume resistivity of the dielectric material. R_1 is the effective series resistance of the capacitor and a function of the dissipation factor of the capacitor.

Operating frequency is one of the most important considerations in choosing a capacitor type. The maximum effective frequency for a capacitor is usually limited by the inductance of the capacitor and its leads. At some frequency the capacitor becomes self-resonant with its inductance. At frequencies above self-resonance, the capacitor has inductive reactance and an impedance increasing with frequency. Figure 5-2 shows how the impedance of a 0.1 μF paper capacitor changes with frequency. As can be seen, this capacitor is self-resonant at about 2.5 MHz.

Figure 5-3 shows the approximate usable frequency ranges for various types of capacitors. The high-frequency limit is due to self-resonance or an increase in the dissipation factor at high frequencies. The low-frequency limit is determined by the largest practical capacitance value available.

The primary advantage of an electrolytic capacitor is the large capacitance value that can be put in a small case. The capacitance-to-volume ratio is larger for an electrolytic than for any other capacitor type. An aluminum electrolytic capacitor, however, may have as much as 1 Ω series resistance.

*See Whalen and Paludi (1977).

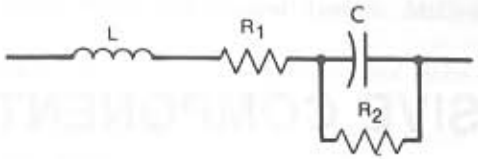

Figure 5-1. *Equivalent circuit for a capacitor.*

Typical values are about 0.1 Ω. The series resistance increases with increasing frequency—due to dielectric losses—and with decreasing temperature. At −40°C the series resistance may be 10–100 times the value at 25°C. Due to their large size aluminum electrolytics also have a large inductance. They are therefore low-frequency capacitors and should normally not be used at frequencies above 25 kHz. They are most often used for low-frequency filtering, bypassing, and coupling. For use at higher frequencies, they should be bypassed by a low value, low inductance, capacitor.

One disadvantage of electrolytic capacitors is the fact that they are polarized, and a dc voltage of the proper polarity must be maintained across them. For maximum life aluminum electrolytic capacitors should be operated at no greater than 80% of their rated voltage. Operating at less than 80% of their rated voltage does not provide any additional reliability. A nonpolarized capacitor can be made by connecting two equal value electrolytics in series, but poled in opposite directions. The resulting capacitance is one-half that of the individual capacitors, and the voltage rating is equal to that of one of the individual capacitors.

When electrolytics are used in ac or pulsating dc circuits, the ripple voltage should not exceed the maximum rated ripple voltage; otherwise, excessive internal heating occurs. Normally, the maximum ripple voltage is

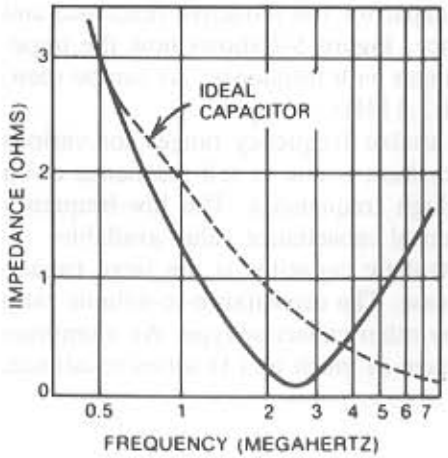

Figure 5-2. *Effect of frequency on the impedance of a 0.1 μF paper capacitor.*

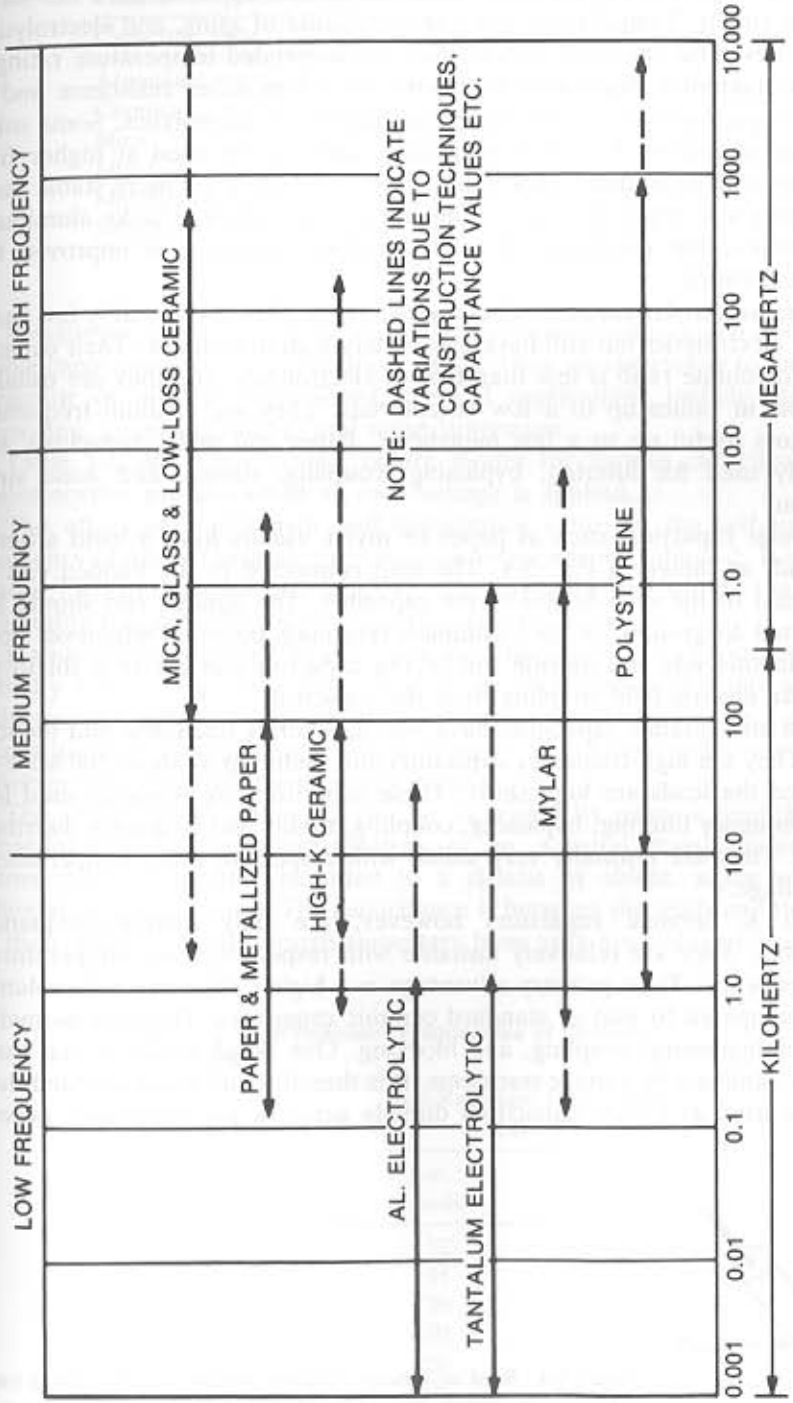

Figure 5-3. *Approximate usable frequency ranges for various types of capacitors.*

specified at 120 Hz, typical of operation as a filter capacitor in a full-wave rectifier circuit. Temperature is the primary cause of aging, and electrolytics should never be operated outside their recommended temperature ratings.

Solid tantalum electrolytic capacitors have less series resistance and a higher capacitance-to-volume ratio than aluminum electrolytics. Some solid tantalum capacitors have low inductance and can be used at higher frequencies than aluminum electrolytics. In general, they are more stable than aluminum with respect to time, temperature, and shock. Unlike aluminum electrolytics, the reliability of solid tantalum capacitors is improved by voltage derating.

Paper and mylar capacitors have series resistances considerably less than that of electrolytics but still have moderately high inductance. Their capacitance-to-volume ratio is less than that of electrolytics, and they are usually available in values up to a few microfarads. They are medium frequency capacitors useful up to a few megahertz. Paper and mylar capacitors are typically used for filtering, bypassing, coupling, timing, and noise suppression.

Tubular capacitors such as paper or mylar usually have a band around one end, as shown in Fig. 5-4. The lead connected to the banded end is connected to the outside foil of the capacitor. The banded end should be connected to ground, or to a common reference potential whenever possible. In this way the outside foil of the capacitor can act as a shield to minimize electric field coupling from the capacitor.

Mica and ceramic capacitors have very low series resistance and inductance. They are high-frequency capacitors and useful up to about 500 MHz—provided the leads are kept short. These capacitors are normally used for high-frequency filtering, bypassing, coupling, timing and frequency discrimination. They are normally very stable with respect to time, temperature, and voltage.

High K ceramic capacitors however, are only medium-frequency capacitors. They are relatively unstable with respect to time, temperature, and frequency. Their primary advantage is a higher capacitance-to-volume ratio, compared to that of standard ceramic capacitors. They are normally used for bypassing, coupling, and blocking. One disadvantage is that they may be damaged by voltage transients. It is therefore not recommended that they be used as bypass capacitors directly across a low-impedance power supply.

Figure 5-4. *Band on tubular capacitor indicates the end that is connected to the outside foil. This end should be connected to ground.*

Table 5-1 Typical Capacitor Failure Modes

Capacitor Type	Normal Use	Over-Voltage
Aluminum electrolytic	Open	Short
Ceramic	Open	Short
Mica	Short	Short
Mylar	Short	Short
Metalized mylar	Leakage	Noisy
Solid tantalum	Short	Short

Polystyrene capacitors have extremely low series resistance and have very stable capacitance-frequency characteristics. They are the closest to the ideal capacitor of all the types listed. Typical applications include filtering, bypassing, coupling, timing, and noise supression.

Table 5-1 shows the typical failure modes for various capacitor types under normal use and when an over-voltage is applied.

The effect of lead length and capacitance value on the self-resonant frequency of a small ceramic capacitor can be seen from Table 5-2. It is clear that at high frequencies, the smallest value capacitor that will do the job is preferable because of its higher self-resonant frequency.

It should be noted that at self-resonance the impedance of a capacitor is actually lower (Fig. 5-2) than that of an ideal capacitor (one without inductance). This fact can be an advantage in some situations (see the discussion on decoupling capacitors in Chapter 10). Above series resonance, however, the lead inductance is detrimental.

The self-resonant frequency can be increased by using a feed-through capacitor designed to mount through, or on, a metal chassis. Figure 5-5 shows such a capacitor mounted in a chassis or shield, along with its schematic representation. The capacitance is between the leads and the case of the capacitor. Feed-through capacitors have very low inductance ground

Table 5-2 Self-Resonant Frequencies of Ceramic Capacitors

	Self-Resonant Frequency (MHz)	
Capacitance Value (pf)	$\frac{1}{4}$-in. Leads	$\frac{1}{2}$-in. Leads
10,000	12	—
1000	35	32
500	70	65
100	150	120
50	220	200
10	500	350

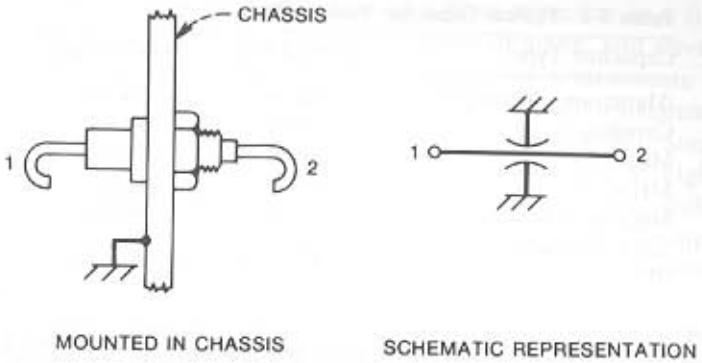

Figure 5-5. *Typical feed-through capacitor.*

connections, since there is no lead present. The lead inductance that does exist is in series with the signal and improves the capacitor's effectiveness, because it transforms the feed-through capacitor into a low pass T-filter. This can be seen in Fig. 5-6, which shows the equivalent circuits, including lead inductance, for both a standard and a feed-through capacitor. As a result feed-through capacitors have very good high-frequency performance. Figure 5-7 shows the lower impedance obtained by using a feed-through capacitor as compared to a standard capacitor.

Paralleling Capacitors

No one capacitor will provide satisfactory performance over the entire range from low to high frequencies. In order to provide filtering over this range of frequencies, two different capacitor types are often used in parallel. For

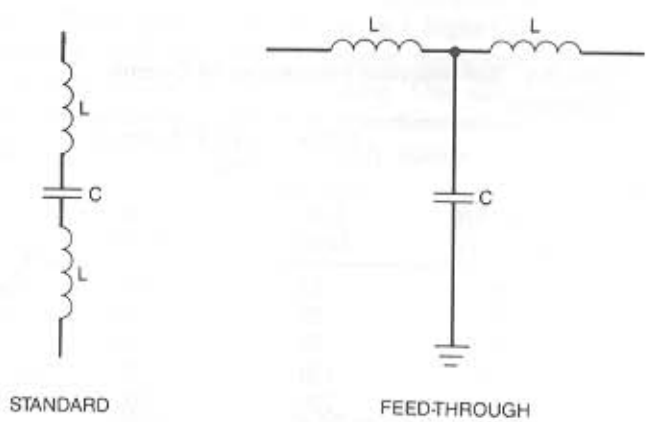

Figure 5-6. *Lead inductance in standard and feed-through capacitors.*

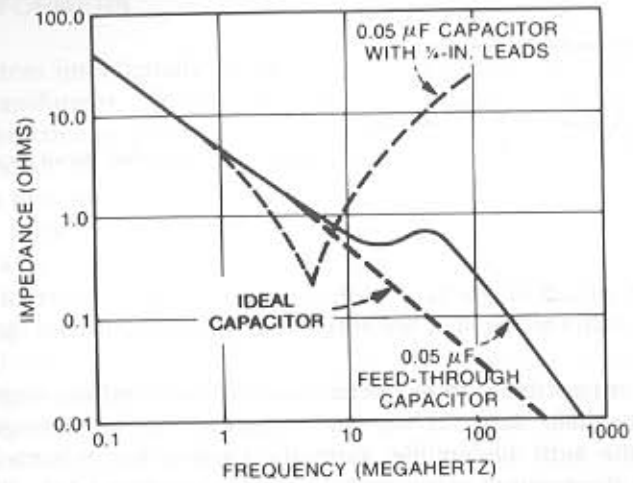

Figure 5-7. *Impedance of 0.05 μF capacitors, showing improved performance of feed-through capacitor.*

example, an electrolytic could be used to provide the large capacitance necessary for low-frequency filtering, paralleled with a small low inductance mica or ceramic capacitor to provide a low impedance at high frequencies.

When capacitors are paralleled, however, resonance problems may occur as a result of the parallel and series resonances produced by the capacitors and the inductance of the leads that interconnect them (Danker, 1985). This can result in large impedance peaks at certain frequencies; these are most severe when the paralleled capacitors have widely different values, or when there are long interconnections between them.

INDUCTORS

Inductors may be categorized by the type of core on which they are wound. The two most general categories are air core (any nonmagnetic material fits into this group) and magnetic core. Magnetic core inductors can be further subdivided depending on whether the core is open or closed. An ideal inductor would have only inductance, but an actual inductor also has series resistance, in the wire used to wind it, and distributed capacitance between the windings. This is shown in the equivalent circuit in Fig. 5-8. The capacitance is represented as a lumped shunt capacitor, so there is parallel resonance at some frequency.

Another important characteristic of inductors is their susceptibility to, and generation of, stray magnetic fields. *Air core or open magnetic core inductors are most likely to cause interference*, since their flux extends a considerable distance from the inductor, as shown in Fig. 5-9A. Inductors

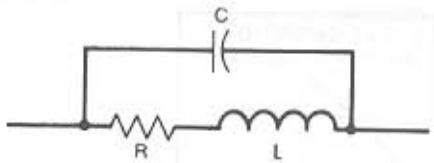

Figure 5-8. *Equivalent circuit for an inductor.*

wound on a closed magnetic core have much reduced external magnetic fields, since nearly all the flux remains inside the magnetic core, as shown in Fig. 5-9B.

As far as susceptibility to magnetic fields is concerned the magnetic core is more susceptible than the air core inductor. An open magnetic core inductor is the most susceptible, since the core—a low reluctance path—concentrates the external magnetic field and causes more of the flux to flow through the coil. A closed magnetic core is less susceptible than an open core but more susceptible than an air core.

It is often necessary to shield inductors to confine their magnetic and electric fields within a limited space. Shields made of low resistance material such as copper or aluminum confine the electric fields. At high frequencies these shields also prevent magnetic flux passage, because of the eddy currents set up within the shield. At low frequencies, however, high-permeability magnetic material must be used to confine the magnetic field.*

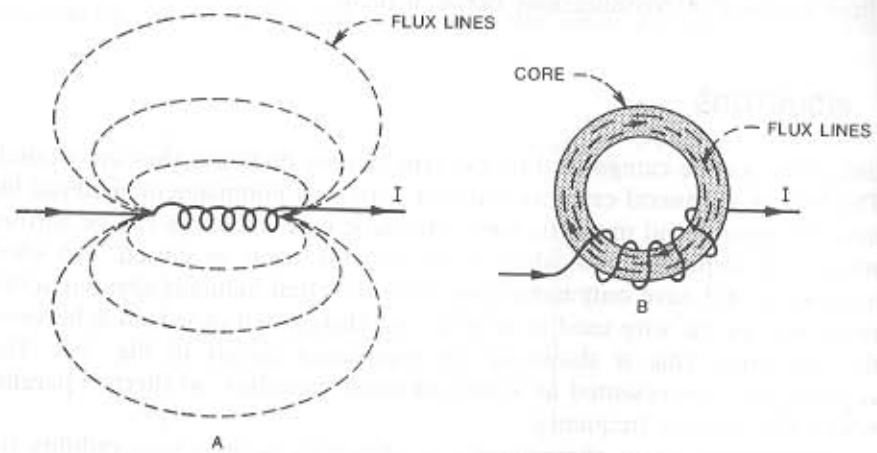

Figure 5-9. *Magnetic fields from (A) air core and (B) closed magnetic core inductors.*

*See Chapter 6 for a detailed analysis of magnetic-field shielding.

TRANSFORMERS

Two inductors intentionally coupled together, usually on a magnetic core, form a transformer. Transformers are often used to provide isolation between two circuits. An example is the isolation transformer used to break a ground loop, as shown in Fig. 3-23. In these cases the only desirable coupling is that which results from the magnetic field. Actual transformers, not being ideal, have capacitance between the primary and secondary windings, as shown in Fig. 5-10; this allows noise coupling through the transformer.

This coupling can be eliminated by providing an electrostatic, or Faraday, shield (a grounded conductor between the two windings), as shown in Fig. 5-11. If properly designed, this shield does not affect the magnetic coupling, but it eliminates the capacitive coupling provided the shield is grounded. The shield must be grounded at point B in Fig. 5-11. If it is grounded to point A, the shield is at a potential of V_G and still couples noise through the capacitor C_2 to the load. Therefore the transformer should be located near the load in order to simplify the connection between the shield and point B.

Electrostatic shielding may also be obtained with two unshielded transformers, as shown in Fig. 5-12. The primary circuit of T_2 must be grounded, preferably with a center tap. The secondary of T_1, if it has a center tap, may also be grounded to hold one end of C_2 near ground potential. As indicated in Fig. 5-12, if the transformers do not have center taps, one of the conductors between the transformers can be grounded. This configuration is less effective than a transformer with a properly designed electrostatic shield. The configuration of Fig. 5-12 is, however, useful in the laboratory to determine whether an electrostatically shielded transformer can effectively decrease the noise coupling in a circuit.

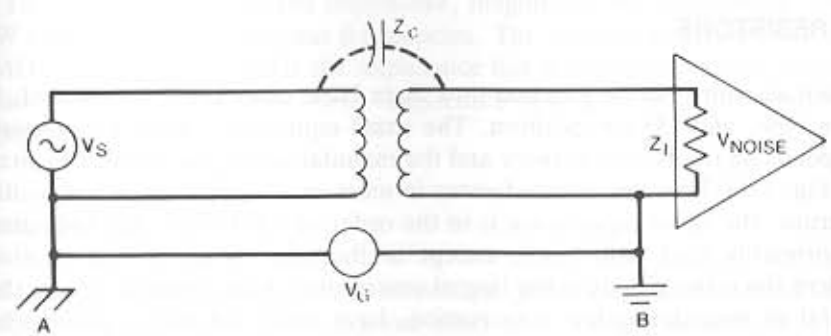

$$V_{NOISE} = \frac{Z_L}{Z_L + Z_C} V_G$$

Figure 5-10. *An actual transformer has capacitive as well as magnetic coupling between primary and secondary windings.*

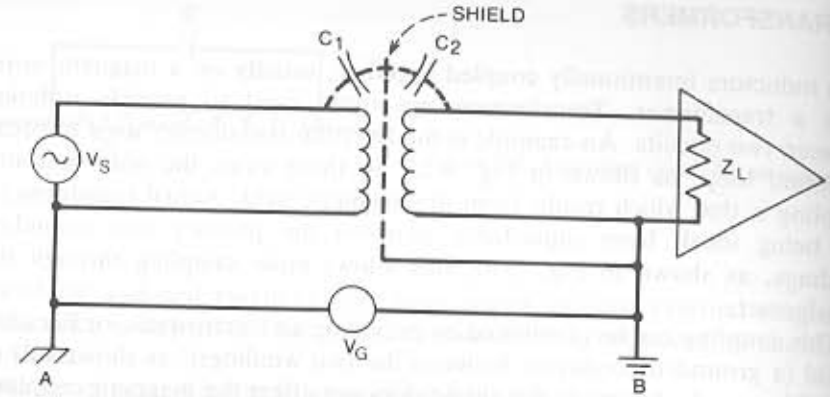

Figure 5-11. *Grounded electrostatic shield between transformer windings breaks the capacitive coupling.*

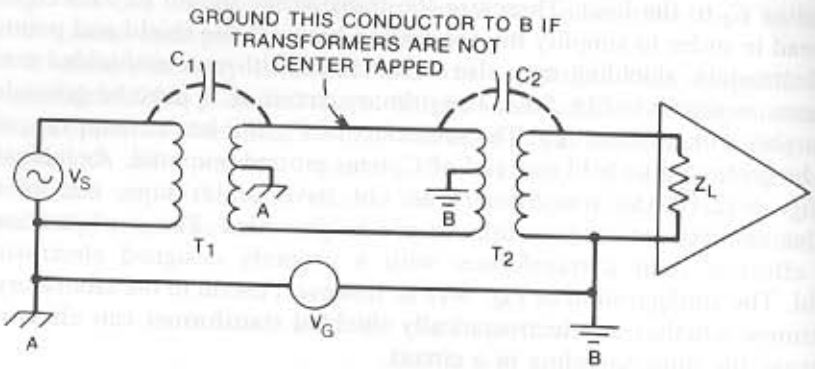

Figure 5-12. *Two unshielded transformers can provide electrostatic shielding.*

RESISTORS

Fixed resistors can be grouped into three basic classes: (1) wirewound, (2) film type, and (3) composition. The exact equivalent circuit for a resistor depends on the type of resistor and the manufacturing processes. The circuit of Fig. 5-13, however, is satisfactory in most cases. In a typical composition resistor, the shunt capacitance is in the order of 0.1–0.5 pF. The inductance is primarily lead inductance, except in the case of wirewound resistors, where the resistor body is the largest contributor. Film resistors, due to their spiral or meandering-line construction, have more inductance than carbon resistors. Except for wirewound resistors, or very low value resistors of other types, the inductance can normally be neglected during circuit analysis. The inductance of a resistor does, however, make it susceptible to pickup from external magnetic fields. Inductance of the external lead can be approximated by using the data in Table 5-4.

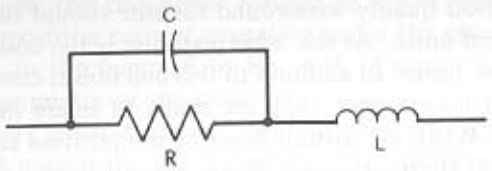

Figure 5-13. *Equivalent circuit for a resistor.*

Table 5-3 Impedance of a 1-MΩ, ½-W Carbon Resistor Measured at Various Frequencies

Frequency (kHz)	Impedance Magnitude (kΩ)	Impedance Phase Angle (degrees)
1	1000	0
9	1000	−3
10	990	−3
50	920	−11
100	860	−16
200	750	−23
300	670	−28
400	610	−32
500	560	−34

The shunt capacitance can be important when high value resistors are used. For example, consider a 22-MΩ resistor with 0.5 pF of shunt capacitance. At 145 kHz the capacitive reactance will be 10% of the resistance. If this resistor is used above this frequency, the capacitance may affect the circuit performance.

Table 5-3 shows measured impedance, magnitude and phase angle, for a ½-W carbon resistor at various frequencies. The nominal resistance value is 1 MΩ. Note that at 500 kHz the impedance has dropped to 560 kΩ, and the phase angle has become −34°. Capacitive reactance has thus become significant.

NOISE IN RESISTORS

All resistors, regardless of their construction, generate a noise voltage. This voltage results from thermal noise and other noise sources, such as shot and contact noise. Thermal noise can never be avoided, but the other sources can be minimized or eliminated. The total noise voltage therefore is equal to or greater than the thermal noise voltage. This is explained further in Chapter 8.

Of the three basic resistor types, wirewound resistors are the quietest.

The noise in a good quality wirewound resistor should be no greater than that due to thermal noise. At the other extreme is the composition resistor, which has the most noise. In addition to thermal noise, composition resistors also have contact noise, since they are made of many individual particles molded together. When no current flows in composition resistors, the noise approaches that of thermal noise. When current flows, additional noise is generated proportional to the current. Figure 5-14 shows the noise generated by a 10-kΩ composition resistor at two current levels. At low frequencies the noise is predominantly contact noise, which has an inverse frequency characteristic. The frequency at which the noise levels off, at a value equal to the thermal noise, varies widely between different type resistors and is also dependent on current level.

The noise produced by film-type resistors is much less than that produced by composition resistors, but is more than that produced by wirewound resistors. The additional noise is again contact noise, but because the material is more homogeneous, the amount of noise is considerably less than for composition resistors.

Another important factor affecting the noise in a resistor is its power rating. If two resistors of the same value and type both dissipate equal power, the resistor with the higher power rating normally has the lower noise. Campbell and Chipman (1949) present data showing approximately a

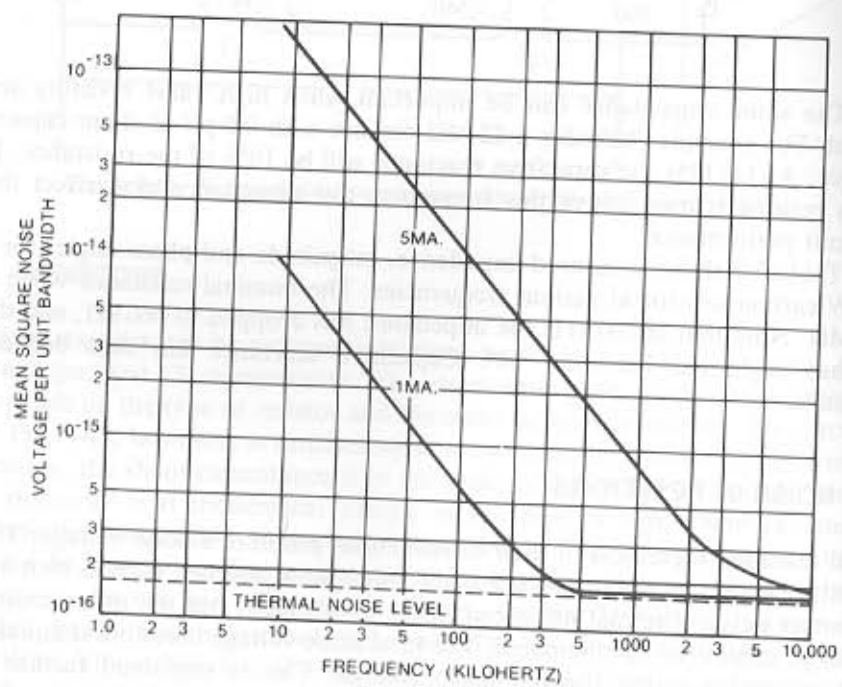

Figure 5-14. *Effect of frequency and current on noise voltage for a 10-kΩ composition resistor.*

factor of 3 between the rms noise voltage of a $\frac{1}{2}$-W composition resistor versus a 2-W composition resistor operating under the same conditions. This difference is due to the factor K in Eq. 8-19 (Chapter 8), a variable that depends on the geometry of the resistors.

Variable resistors generate all the inherent noises of fixed resistors, but in addition generate noise from wiper contact. This additional noise is directly proportional to current through the resistor and the value of its resistance. To reduce the noise, the current through the resistor and the resistance itself should both be minimized.

CONDUCTORS

Although conductors are not normally considered components, they do have characteristics that are very important to the noise and transient performance of electronic circuits. Inductance is one of the most important of these characteristics. Even at low frequencies a conductor may have more inductive reactance than resistance.

The external inductance of a straight, round conductor of diameter d, whose center is located a distance h above a ground plane is

$$L = \frac{\mu}{2\pi} \ln\left(\frac{4h}{d}\right) \quad \text{H/m}. \tag{5-1}$$

This assumes that $h > 1.5\,d$. The permeability of free space (μ) is equal to $4\pi \times 10^{-7}$ H/m. Equation 5-1 therefore can be rewritten

$$L = 2 \times 10^{-7} \ln\left(\frac{4h}{d}\right) \quad \text{H/m}. \tag{5-2}$$

Changing units to microhenries per inch gives

$$L = 0.005 \ln\left(\frac{4h}{d}\right) \quad \mu\text{H/in}. \tag{5-3}$$

The preceding equations represent the external inductance since they do not include the effects of the magnetic field within the conductor itself. The total inductance is actually the sum of the internal plus external inductances. The internal inductance of a straight wire of circular cross section carrying a *uniform low-frequency current* is 1.27×10^{-3} μH/in., independent of wire size. The internal inductance is negligible compared to the external inductance except for very close conductor spacings. The internal inductance is further reduced when higher-frequency currents are considered since, due to skin effect, the current is concentrated near the surface of the conductor. The external inductance therefore is normally the only inductance of significance.

Table 5-4 lists values of external inductance and resistance for various gauge conductors. The table shows that moving the conductor closer to the ground plane decreases its inductance; this assumes the ground plane is the return circuit. Raising the conductor higher above the ground plane increases the inductance. Beyond a height of a few inches, however, the inductance approaches its free-space value, and increasing the spacing has very little effect on the inductance. This is because almost all the flux produced by current in the conductor is already contained within the loop.

Table 5-4 also indicates that the larger the conductor, the lower is the inductance. The inductance and the conductor diameter are logarithmically related. For this reason low values of inductance are not easily obtained by increasing the conductor diameter. The spacing between conductors affects the external inductance, whereas the cross section affects only the internal inductance. The internal inductance can be reduced by using a flat, rectangular conductor instead of a round one. A hollow round tube also has less inductance than the same size solid conductor.

For two parallel conductors carrying uniform current in opposite directions, the self-inductance, neglecting flux in the wires themselves, is

$$L = 0.01 \ln\left(\frac{2D}{d}\right) \quad \mu\text{H/in.} \tag{5-4}$$

In Eq. 5-4, D is the center to center spacing and d is the conductor diameter.

Resistance is a second very important characteristic of a conductor. Selection of conductor size is generally determined by the maximum allowable voltage drop in the conductor. The voltage drop is a function of the conductor resistance and the maximum current. Table 5-4 lists the value of dc resistance for various size conductors.

At higher frequencies, resistance of a conductor increases, due to skin effect. Skin effect describes a condition where, due to the magnetic fields produced by current in the conductor, there is a concentration of current near the conductor surface. As the frequency increases, the current is concentrated closer to the surface. This effectively decreases the cross section through which the current flows and therefore increases the effective resistance.

For solid, round copper conductors the ac and dc resistances are approximately related by the following expression (ITT 1968):

$$R_{ac} = (0.096 d\sqrt{f} + 0.26) R_{dc}, \tag{5-5}$$

where d is the conductor diameter in inches and f is the frequency in hertz. For $d\sqrt{f}$ greater than ten, Eq. 5-5 is accurate within a few percent. For $d\sqrt{f}$ less than ten, the actual ac resistance is greater than that given by Eq. 5-5. If the conductor material is other than copper, the first term of Eq. 5-5 must

Table 5-4 Inductance and Resistance of Round Conductors

Wire Size (AWG)	Diameter (in.)	Resistance (mΩ/in.)	Inductance (μH per in.) 0.25 in. Above Ground Plane	0.5 in. Above Ground Plane	1 in. Above Ground Plane
26	0.016	3.39	0.021	0.025	0.028
24	0.020	2.13	0.020	0.023	0.027
22	0.025	1.34	0.019	0.022	0.026
20	0.032	0.85	0.017	0.021	0.024
18	0.040	0.53	0.016	0.020	0.023
14	0.064	0.21	0.014	0.017	0.021
10	0.102	0.08	0.012	0.015	0.019

be multiplied by the factor

$$\sqrt{\frac{\mu_r}{\rho_r}},$$

where μ_r is the relative permeability of the conductor material and ρ_r is the relative resistivity of the material compared to copper. Due to skin effect a hollow tube at high frequency has the same ac resistance as a solid conductor.

The ac resistance of a conductor can be decreased by changing the shape of the cross section. A rectangular conductor has inherently lower ac resistance than a round conductor because of its greater surface per unit cross-sectional area.

Since a rectangular conductor has less ac resistance and less inductance than a round conductor with the same cross-sectional area, it is a better high-frequency conductor. Flat straps or braid are therefore commonly used as ground conductors even in relatively low-frequency circuits.

Equation 5-5 can also be used to determine the approximate ac resistance for any shape conductor by letting

$$d = \frac{\text{Perimeter of cross section}}{\pi}. \tag{5-6}$$

FERRITE BEADS

Ferrite is a generic term for a class of nonconductive ceramics consisting of combinations of oxides of iron, cobalt, nickel, zinc, magnesium, and some rare earths. The variety of ferrites available is large because each manufacturer has developed their own oxide composition. No two manufacturers use precisely the same combination; therefore multiple sourcing of ferrites is difficult. Ferrites have one major advantage over ferromagnetic materials: high electrical resistivity, which results in low eddy-current losses up into the gigahertz frequency range. In ferromagnetic materials eddy-current losses increase with the square of the frequency. Because of this, in many high-frequency applications, ferrites are the material of choice.

Ferrite beads provide an inexpensive way of adding high-frequency loss in a circuit without introducing power loss at dc or low frequencies. The beads are small and can be installed simply by slipping them over a component lead or conductor. The beads are most effective in providing attenuation of unwanted signals above 1 MHz. When properly used, these beads can provide high-frequency decoupling, parasitic suppression, and shielding.

Figure 5-15A shows a small cylindrical ferrite bead installed on a conductor, and Fig. 5-15B shows the high-frequency equivalent circuit—an inductor in series with a resistor. The values of both the resistor and the inductor are dependent on frequency. The resistance is due to the high-frequency

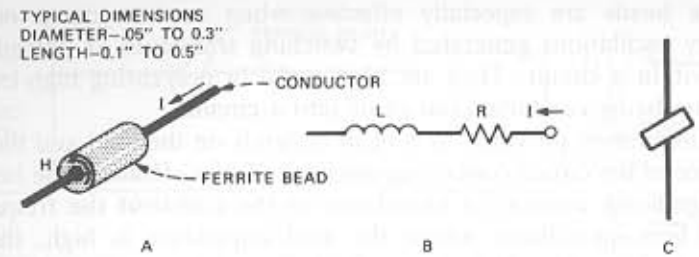

Figure 5-15. *(A) Ferrite bead on conductor; (B) high-frequency equivalent circuit; and (C) typical schematic symbol.*

hysteresis loss in the ferrite material. Figure 5-15C shows the schematic symbol used for ferrite beads. Most bead manufacturers characterize their components by specifying the magnitude of the impedance versus frequency. The magnitude of the impedance is given by

$$|Z| = \sqrt{R^2 + (2\pi f L)^2}, \tag{5-7}$$

where R is the equivalent resistance of the bead and L is the equivalent inductance. Figure 5-16 shows data on two ferrite beads. Bead number 1 is primarily resistive in the frequency range of 10 to 100 MHz, whereas bead number 2 is primarily inductive in this frequency range.

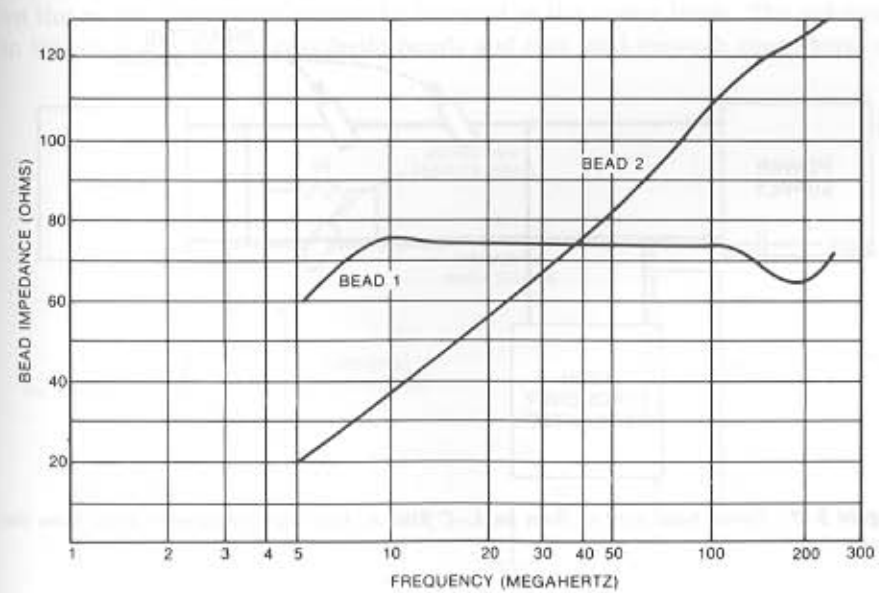

Figure 5-16. *Data for a primarily resistive (bead 1) ferrite bead and primarily inductive (bead 2) ferrite bead.*

Ferrite beads are especially effective when used to damp out high-frequency oscillations generated by switching transients or parasitic resonances within a circuit. They are also useful in preventing high-frequency noise from being conducted out of or into a circuit.

The attenuation provided by a bead depends on the load and the source impedance of the circuit containing the bead. To be effective, the bead must add a significant amount of impedance to the circuit at the frequency of interest. For applications where the load impedance is high, the effectiveness of the bead can be increased by lowering the load impedance by the addition of a low inductance bypass capacitor.

Since the impedance of a single bead is limited to about 100 Ω, beads are most effective in low-impedance circuits such as power supplies, class C power amplifiers, resonant circuits, and SCR switching circuits. If a single bead does not provide sufficient attenuation, multiple turns* can be placed on a single bead, or multiple beads can be used.

Figures 5-17 through 5-20 show some typical applications of ferrite beads. In Fig. 5-17 the inductive characteristic of the beads is used to form an L–C filter to keep signals from the high-frequency oscillator out of the load. A bead with resistive characteristics could also have been used to form a high-frequency R–C filter without reducing the dc voltage to the load. In Fig. 5-18 a resistive bead is used to damp out the ringing generated by a long interconnection between two fast logic gates.

Figure 5-19 shows a Class C power amplifier which has an unwanted

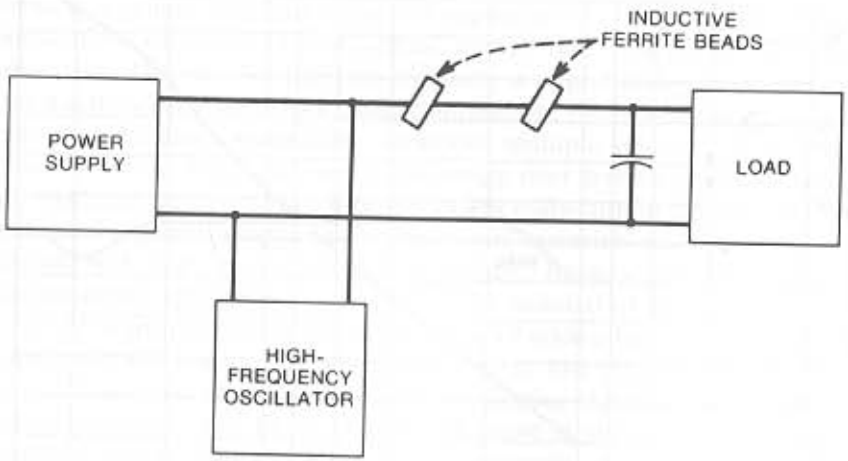

Figure 5-17. *Ferrite bead used to form an L–C filter to keep high frequencies away from the load.*

*Multiple turns increase the parasitic capacitance across the bead, and at high-frequency may make the bead less effective.

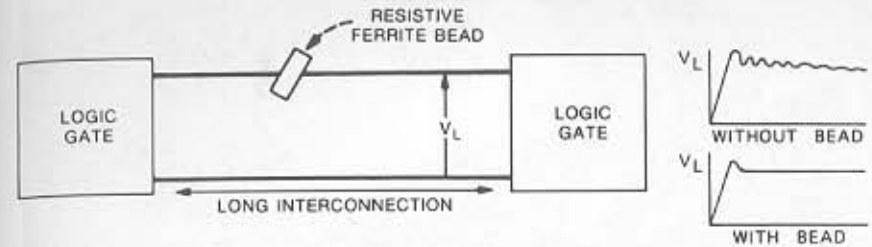

Figure 5-18. *Resistive ferrite bead used to damp out ringing on long line between fast logic gates.*

output signal on a high harmonic frequency due to the parasitic resonant circuit of capacitor C and inductor L. In this case the inductance of the bead is used to force the harmonic current to flow through the 50-Ω resistor and be dissipated as heat. At the desired operating frequency the impedance of the bead is low and provides a shunt around the resistor.

Figure 5-20 shows two ferrite beads mounted on a printed circuit board. The circuit is part of the horizontal output for a color television set, and the beads are used to supress parasitic oscillations.

Yet another application for ferrite beads is shown in Fig. 5-21. Figure 5-21A shows a dc servo motor connected to a motor control circuit. High-frequency commutation noise from the motor is being conducted out of the motor shield on the motor leads, and then radiated from the leads to interfere with other low-level circuits. Because of acceleration requirements on the motor, resistance cannot be inserted in the motor leads. The solution in this case was to add two ferite beads and two feed-through capacitors, as

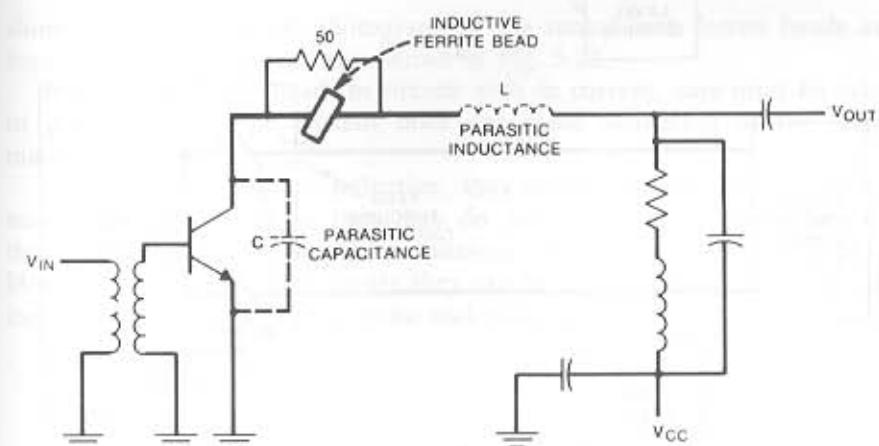

Figure 5-19. *Ferrite bead and resistor used to damp out parasitic oscillation in Class C-power output stage.*

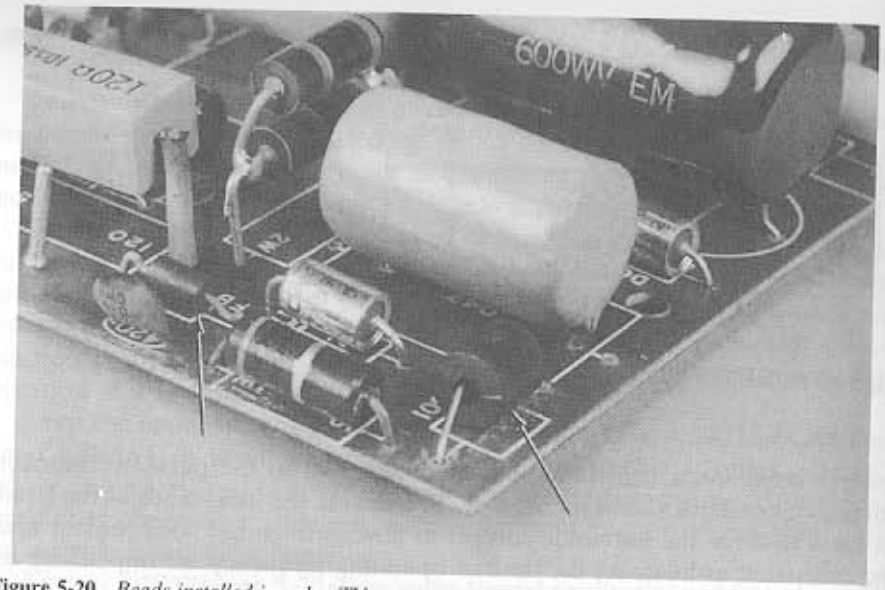

Figure 5-20. *Beads installed in color TV set to suppress parasitic oscillations in horizontal output circuit.*

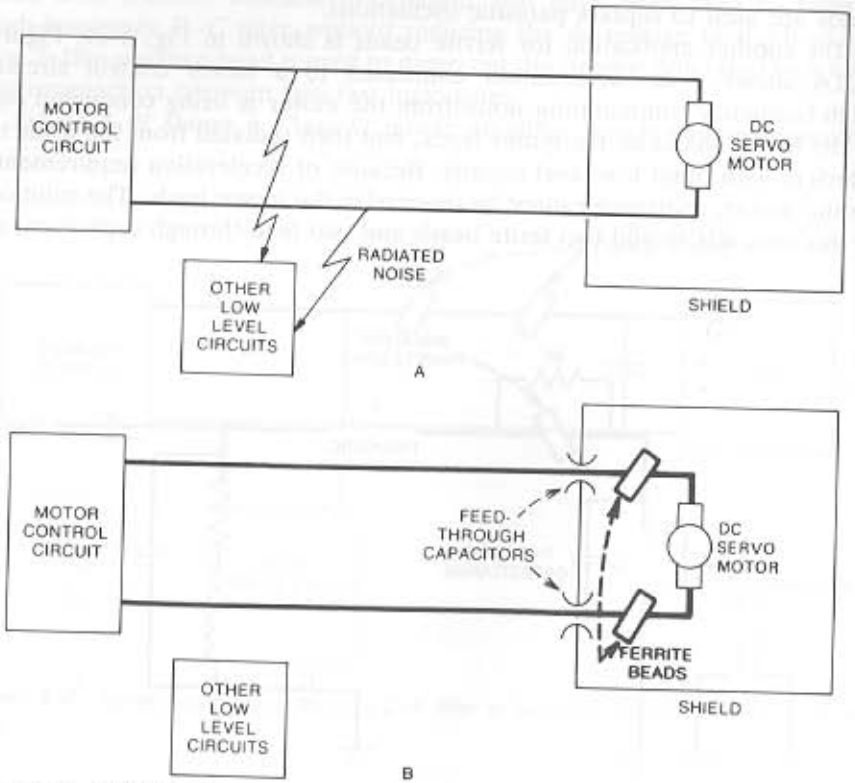

Figure 5-21. *(A) High-frequency commutation noise of motor is interfering with low-level circuits; (B) beads used in conjunction with feed-through capacitors to eliminate interference.*

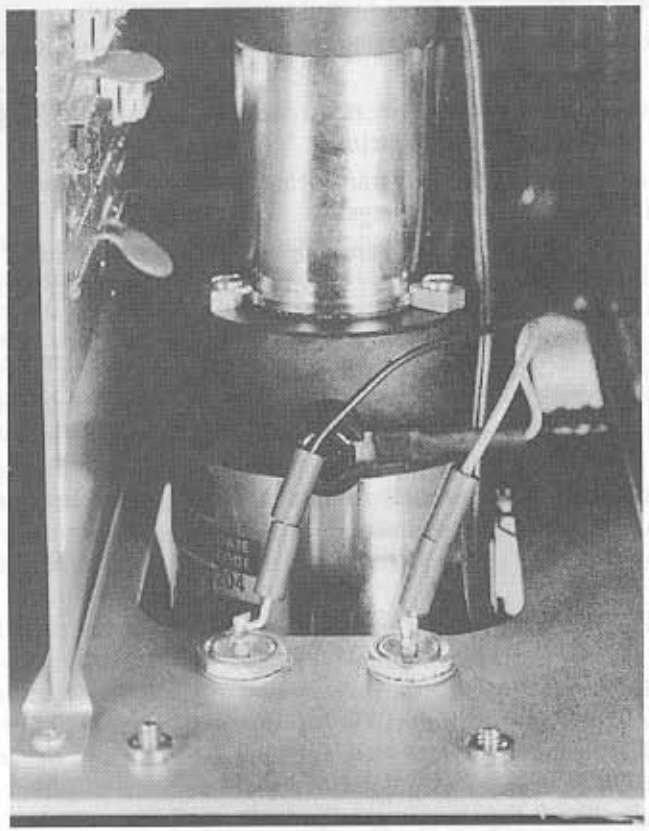

Figure 5-22. *Ferrite beads and feed-through capacitors used to reduce motor commutation noise coupling to power leads.*

shown in Fig. 5-21B. A photograph of the motor with ferrite beads and feed-through capacitors is also shown in Fig. 5-22.

When using ferrite beads in circuits with dc current, care must be taken to guarantee that the current does not cause saturation of the ferrite material.

Since ferrite beads are inductive, they should not be used indiscriminately. In some locations they may do more harm than good; they can themselves produce unwanted resonances in a circuit when misapplied. However, when applied properly they can be a very simple, effective, and inexpensive means to reduce noise and parasitic oscillation.

SUMMARY

- Electrolytics are low-frequency capacitors.
- All capacitors become self-resonant at some frequency which limits their high-frequency use.

- Mica and ceramic are good high-frequency capacitors.
- Air core inductors generate more noise fields than do closed magnetic material core inductors.
- Magnetic core inductors are more susceptible to interfering magnetic fields than the air core inductors.
- An electrostatic shielded transformer is used to reduce capacitive coupling between the windings.
- All resistor types have the same amount of thermal noise.
- Variable resistors in low-level circuits should be placed so that no dc flows through them.
- Even at low frequencies a conductor normally has more inductive reactance than resistance.
- A flat rectangular conductor will have less ac resistance and inductance, than a round cross section.
- Ferrite beads can be used to add high-frequency loss to a circuit without introducing a dc loss.

BIBLIOGRAPHY

Campbell, R. H., Jr., and Chipman, R. A. "Noise from Current-Carrying Resistors, 20–500 KC." *Proceedings of the IRE*, vol. 37. August 1949, pp. 938–942.

Costa, D. P. "RFI Suppression, Part II." *Electromechanical Design*, vol. 11. December 1967.

Cowdell, R. B. "Don't Experiment with Ferrite Beads." *Electronic Design*, vol. 17, June 7, 1969.

Danker, B. "New Methods to Decrease Radiation from Printed Circuit Boards." 6th Symposium on Electromagnetic Compatibility. Zurich, Switzerland, March 5–7, 1985.

Dummer, G. W. A., and Nordenberg, H. M. *Fixed and Variable Capacitors*. McGraw-Hill, New York, 1960.

Henney, K., and Walsh, C. *Electronic Components Handbook*. Vol. 1. McGraw-Hill, New York, 1957.

ITT. *Reference Data for Radio Engineers*. 5th ed. Howard W. Sams, New York, 1968, p. 6–8.

Rostek, P. M. "Avoid Wiring-Inductance Problems." *Electronic Design*, vol. 22, December 6, 1974.

Skilling, H. H. *Electric Transmission Lines*. McGraw-Hill, New York, 1951.

Whalen, J. J., and Paludi, C. "Computer-Aided Analysis of Electronic Circuits—the Need to Include Parasitic Elements." *International Journal of Electronics*, vol. 43, no. 5, November 1977.

6 SHIELDING

A shield is a metallic partition placed between two regions of space. It is used to control the propagation of electric and magnetic fields from one of the regions to the other. Shields may be used to contain electromagnetic fields, if the shield surounds the noise source as shown in Fig. 6-1. This configuration provides protection for all susceptible equipment located outside the shield. A shield may also be used to keep electromagnetic radiation out of a region, as shown in Fig. 6-2. This provides protection only for the specific equipment contained within the shield. From an overall systems point of view, shielding the noise source is more efficient than shielding the receptor. However, there are cases where the source must be allowed to radiate (i.e., broadcast stations) and the shielding of individual receptors may be necessary.

It is of little value to make a shield, no matter how well designed, and then allow electromagnetic energy to enter (or exit) the enclosure by an alternative path such as cable penetrations. Cables will pick up noise on one side of the shield and conduct it to the other side, where it will be re-radiated. In order to maintain the integrity of the shield enclosure, noise voltages should be filtered from all cables that penetrate the shield. This applies to power cables as well as signal cables. Cable shields that penetrate a shielded enclosure must be bonded to that enclosure in order to prevent noise coupling across the boundary.

NEAR FIELDS AND FAR FIELDS

The characteristics of a field are determined by the source, the media surrounding the source, and the distance between the source and the point of observation. At a point close to the source, the field properties are determined primarily by the source characteristics. Far from the source, the properties of the field depend mainly on the medium through which the field is propagating. Therefore the space surrounding a source of radiation can be broken into two regions, as shown in Fig. 6-3. Close to the source is the near, or induction, field. At a distance greater than the wavelength (λ) divided by 2π (approximately one-sixth of a wavelength) is the far, or radiation, field. The region around $\lambda/2\pi$ is the transition region between the near and far fields.

The ratio of the electric field (E) to the magnetic field (H) is the wave

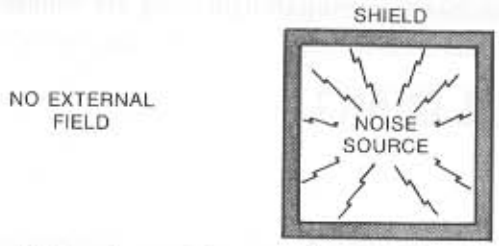

Figure 6-1. *Shield application where a noise source is contained, preventing interference with equipment outside the shield.*

impedance. In the far field this ratio E/H equals the characteristic impedance of the medium (e.g., $E/H = Z_0 = 377\ \Omega$ for air or free space). In the near field the ratio is determined by the characteristics of the source and the distance from the source to where the field is observed. If the source has high current and low voltage ($E/H < 377$), the near field is predominantly magnetic. Conversely, if the source has low current and high voltage ($E/H > 377$), the near field is predominantly electric.

For a rod or straight wire antenna, the source impedance is high. The wave impedance near the antenna—predominantly an electric field—is also

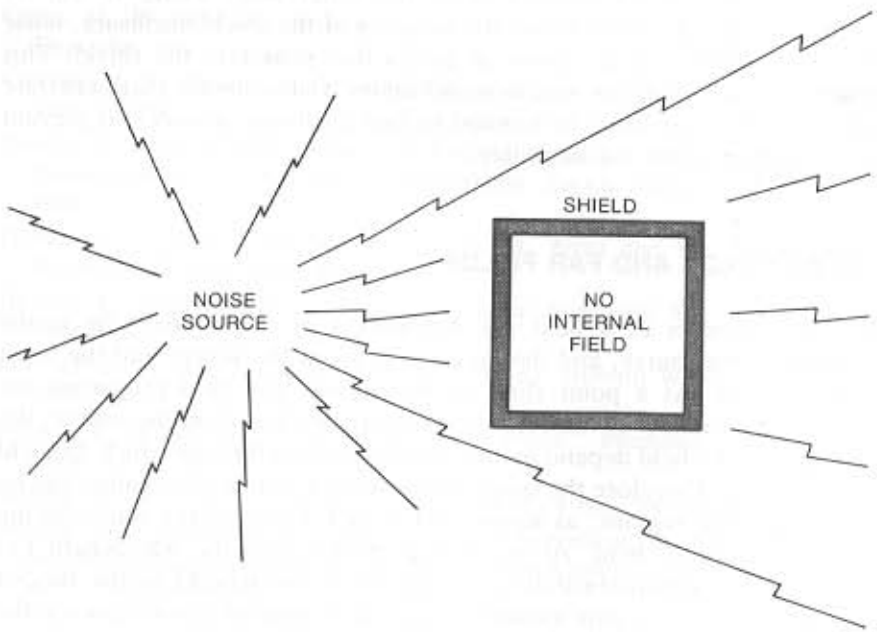

Figure 6-2. *Shield application where interference is prevented by placing a shield around a receptor to prevent noise infiltration.*

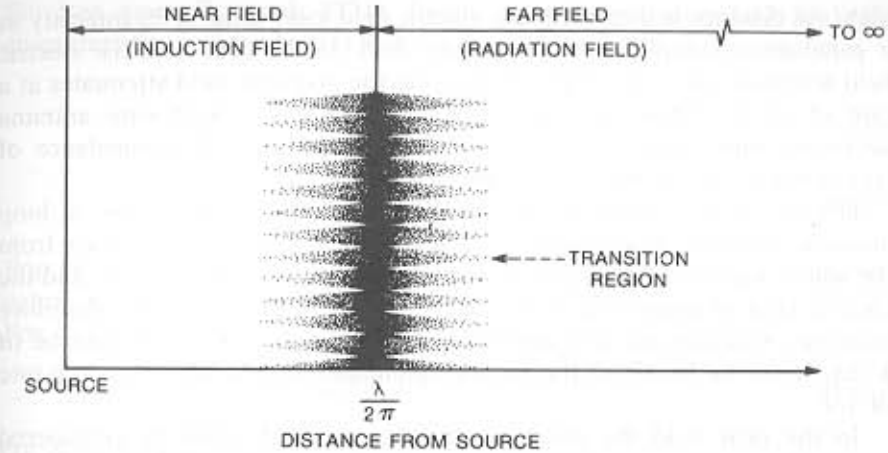

Figure 6-3. *Field character depends on the distance from the source. The transition from the near to far field occurs at $\lambda/2\pi$.*

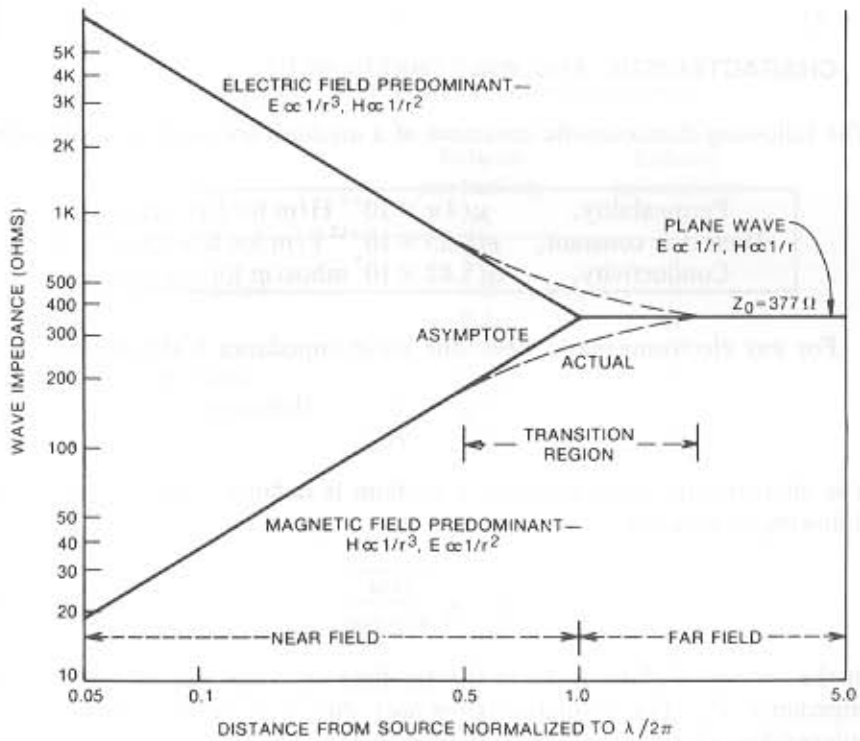

Figure 6-4. *Wave impedance depends on the distance from the source and on whether the field is electric or magnetic.*

high. As distance is increased, the electric field loses some of its intensity as it generates a complementary magnetic field. In the near field the electric field attenuates at a rate of $(1/r)^3$, whereas the magnetic field attenuates at a rate of $(1/r)^2$. Thus the wave impedance from a straight wire antenna decreases with distance and asymptotically approaches the impedance of free space in the far field, as shown in Fig. 6-4.

For a predominantly magnetic field—such as produced by a loop antenna—the wave impedance near the antenna is low. As the distance from the source increases, the magnetic field attenuates at a rate of $(1/r)^3$ and the electric field attenuates at a rate of $(1/r)^2$. The wave impedance therefore increases with distance and approaches that of free space at a distance of $\lambda/2\pi$. In the far field both the electric and magnetic fields attenuate at a rate of $1/r$.

In the near field the electric and magnetic fields must be considered separately, since the ratio of the two is not constant. In the far field, however, they combine to form a plane wave having an impedance of 377 Ω. Therefore, when plane waves are discussed, they are assumed to be in the far field. When individual electric and magnetic fields are discussed they are assumed to be in the near field.

CHARACTERISTIC AND WAVE IMPEDANCES

The following characteristic constants of a medium are used in this chapter:

Permeability,	$\mu(4\pi \times 10^{-7}$ H/m for free space).
Dielectric constant,	$\epsilon(8.85 \times 10^{-12}$ F/m for free space).
Conductivity,	$\sigma(5.82 \times 10^{7}$ mhos/m for copper).

For any electromagnetic wave, the wave impedance is defined as

$$Z_w = \frac{E}{H}. \tag{6-1}$$

The characteristic impedance of a medium is defined (Hayt, 1974) by the following expression:

$$Z_0 = \sqrt{\frac{j\omega\mu}{\sigma + j\omega\epsilon}}. \tag{6-2}$$

In the case of a plane wave in the far field, Z_0 is also equal to the wave impedance Z_w. For insulators ($\sigma \ll j\omega\epsilon$) the characteristic impedance is independent of frequency and becomes

$$Z_0 = \sqrt{\frac{\mu}{\epsilon}}. \tag{6-3}$$

For free space Z_0 equals 377 Ω. In the case of conductors ($\sigma \gg j\omega\epsilon$), the characteristic impedance is called the shield impedance Z_s and becomes

$$Z_s = \sqrt{\frac{j\omega\mu}{\sigma}} = \sqrt{\frac{\omega\mu}{2\sigma}}\,(1+j), \tag{6-4a}$$

$$|Z_s| = \sqrt{\frac{\omega\mu}{\sigma}}. \tag{6-4b}$$

For copper at 1 kHz, $|Z_s|$ equals 1.16×10^{-5} Ω. Substituting numerical values for the constants of Eq. 6-4b gives the following results:
For copper,

$$|Z_s| = 3.68 \times 10^{-7}\sqrt{f}. \tag{6-5a}$$

For aluminum,

$$|Z_s| = 4.71 \times 10^{-7}\sqrt{f}. \tag{6-5b}$$

For steel,

$$|Z_s| = 3.68 \times 10^{-5}\sqrt{f}. \tag{6-5c}$$

Table 6-1 Relative Conductivity and Permeability of Various Materials

Material	Relative conductivity σ_r	Relative permeability μ_r
Silver	1.05	1
Copper—annealed	1.00	1
Gold	0.7	1
Chromium	0.664	1
Aluminum (soft)	0.61	1
Aluminum (tempered)	0.4	1
Zinc	0.32	1
Beryllium	0.28	1
Brass	0.26	1
Cadmium	0.23	1
Nickel	0.20	100
Bronze	0.18	1
Platinum	0.18	1
Tin	0.15	1
Steel (SAE 1045)	0.10	1000
Lead	0.08	1
Monel	0.04	1
Conetic (1 kHz)	0.03	25,000
Mumetal (1 kHz)	0.03	20,000
Stainless steel (430)	0.02	500

For any conductor, in general,

$$\boxed{|Z_s| = 3.68 \times 10^{-7} \sqrt{\frac{\mu_r}{\sigma_r}} \sqrt{f}\,.} \tag{6-5d}$$

Representative values of the relative permeability (μ_r) and the relative conductivity (σ_r) are listed in Table 6-1.

SHIELDING EFFECTIVENESS

The following sections discuss shielding effectiveness in both the near and far fields. Shielding effectiveness can be determined by analyzing the problem in either of two ways. One method is to use circuit theory, and the second is to use field theory. In the circuit theory approach the noise fields induce currents in the shields, and these currents in turn generate additional fields that tend to cancel the original fields in certain regions. An example of this is shown in Fig. 6-5. For most of this chapter, however, we will adopt the more fundamental field theory approach.

Shielding can be specified in terms of the reduction in magnetic and/or electric field strength caused by the shield. It is convenient to express this shielding effectiveness in units of decibels (dB).* Use of dB then permits the

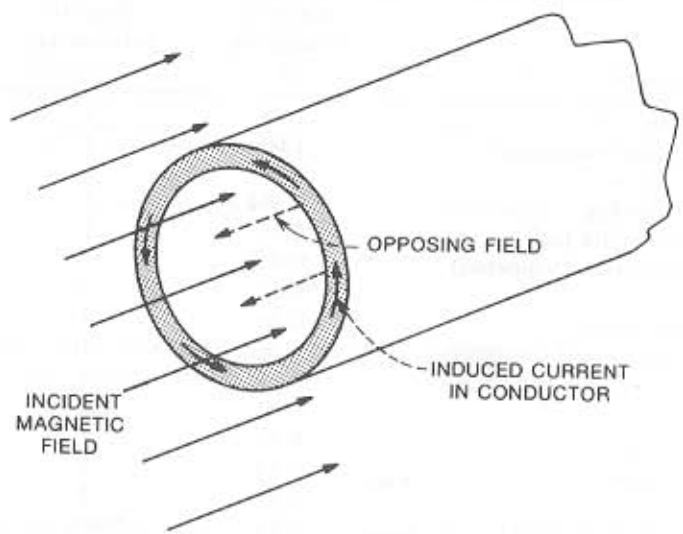

Figure 6-5. *Conducting material can provide magnetic shielding. The incident magnetic field induces currents in the conductor, producing an opposing field to cancel the incident field in the region enclosed by the shield.*

*See Appendix A for a discussion of the decibel.

shielding produced by various effects to be added to obtain the total shielding. Shielding effectiveness (S) is defined for electric fields as

$$S = 20 \log \frac{E_0}{E_1} \quad \text{dB}\,, \tag{6-6}$$

and for magnetic fields as

$$S = 20 \log \frac{H_0}{H_1} \quad \text{dB}\,. \tag{6-7}$$

In the preceding equations, $E_0(H_0)$ is the incident field strength, and $E_1(H_1)$ is the field strength of the transmitted wave as it emerges from the shield.

In the design of a shielded enclosure, there are two prime considerations: (1) the shielding effectiveness of the shield material itself, and (2) the shielding effectiveness due to discontinuities and holes in the shield. These two items are considered separately in this chapter.

First, the shielding effectiveness of a solid shield with no seams or holes is determined, and then the effect of discontinuities and holes is considered. It is the shielding effectiveness of the apertures that usually determines the overall shielding effectiveness of a shield, not the intrinsic shielding effectiveness of the shield material.

Shielding effectiveness varies with frequency, geometry of shield, position within the shield where the field is measured, type of field being attenuated, direction of incidence, and polarization. This section will consider the shielding provided by a plane sheet of conducting material. This simple geometry serves to introduce general shielding concepts and shows which material properties determine shielding effectiveness, but does not include those effects due to the geometry of the shield. The results of the plane sheet calculations are useful for estimating the relative shielding ability of various materials.

Two types of loss are encountered by an electromagnetic wave striking a metallic surface. The wave is partially reflected from the surface, and the transmitted (nonreflected) portion is attenuated as it passes through the medium. This latter effect, called absorption or penetration loss, is the same in either the near or the far field and for electric or magnetic fields. Reflection loss, however, is dependent on the type of field, and the wave impedance.

The total shielding effectiveness of a material is equal to the sum of the absorption loss (A) plus the reflection loss (R) plus a correction factor (B) to account for multiple reflections in thin shields. Total shielding effectiveness therefore can be written as

$$S = A + R + B \quad \text{dB}\,. \tag{6-8}$$

All the terms in Eq. 6-8 must be expressed in dB. The multiple reflection factor B can be neglected if the absorption loss A is greater than 9 dB. From

a practical point of view, B can also be neglected for electric fields and plane waves.

ABSORPTION LOSS

When an electromagnetic wave passes through a medium its amplitude decreases exponentially (Hayt, 1974) as shown in Fig. 6-6. This decay occurs because currents induced in the medium produce ohmic losses and heating of the material. Therefore we can write

$$E_1 = E_0 e^{-t/\delta}, \tag{6-9}$$

and

$$H_1 = H_0 e^{-t/\delta}, \tag{6-10}$$

where $E_1(H_1)$ is the wave intensity at a distance t within the media, as shown in Fig. 6-6. The distance required for the wave to be attenuated to $1/e$ or 37% of its original value is defined as the skin depth, which is equal to

$$\delta = \sqrt{\frac{2}{\omega\mu\sigma}} \quad \text{m}.^* \tag{6-11a}$$

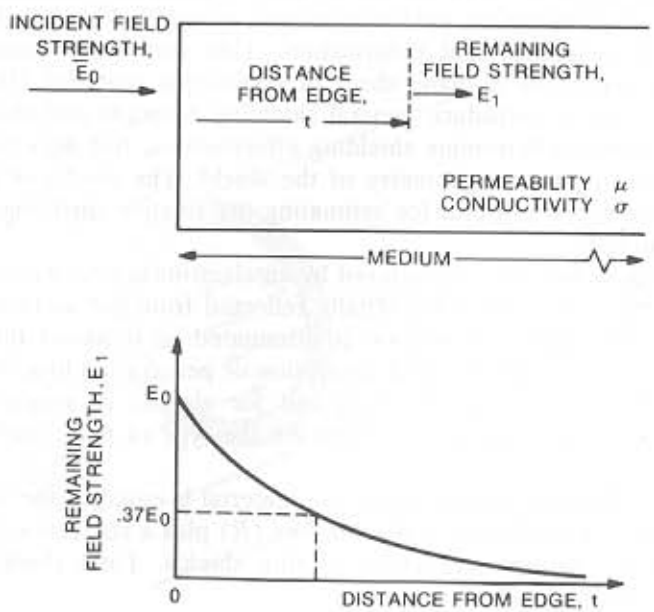

Figure 6-6. *Electromagnetic wave passing through an absorbing medium is attenuated exponentially.*

*Skin depth calculated by Eq. 6-11a is in meters when the constants listed on p. 162 (MKS system) are used.

Table 6-2 Skin Depths of Various Materials

Frequency	Copper (in.)	Aluminum (in.)	Steel (in.)	Mumetal (in.)
60 Hz	0.335	0.429	0.034	0.014
100 Hz	0.260	0.333	0.026	0.011
1 kHz	0.082	0.105	0.008	0.003
10 kHz	0.026	0.033	0.003	—
100 kHz	0.008	0.011	0.0008	—
1 MHz	0.003	0.003	0.0003	—
10 MHz	0.0008	0.001	0.0001	—
100 MHz	0.00026	0.0003	0.00008	—
1000 MHz	0.00008	0.0001	0.00004	—

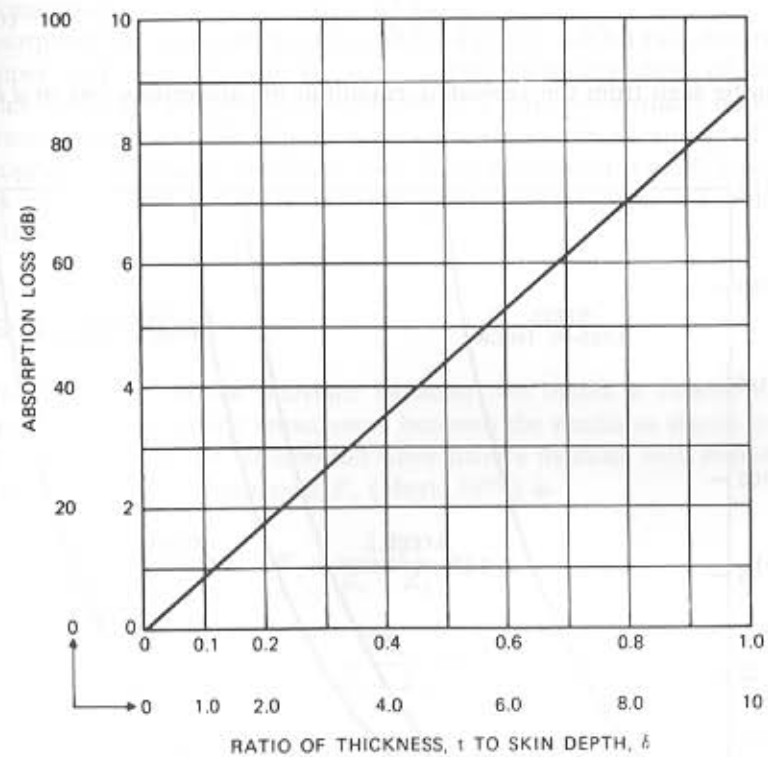

Figure 6-7. *Absorption loss is proportional to the thickness and inversely proportional to the skin depth of the medium. This plot can be used for electric fields, magnetic fields, or plane waves.*

To get an idea of typical skin depths for real materials, Eq. 6-11a can be revised. Substituting numerical values for μ and σ, and changing units so the skin depth is in inches gives

$$\delta = \frac{2.6}{\sqrt{f\mu_r\sigma_r}} \quad \text{in.} \tag{6-11b}$$

Some representative skin depths for copper, aluminum, steel, and mumetal are listed in Table 6-2.

The absorption loss through a shield can now be written as

$$A = 20\left(\frac{t}{\delta}\right)\log(e) \quad \text{dB}, \tag{6-12a}$$

$$A = 8.69\left(\frac{t}{\delta}\right) \quad \text{dB}. \tag{6-12b}$$

As can be seen from the preceding equation, *the absorption loss in a shield*

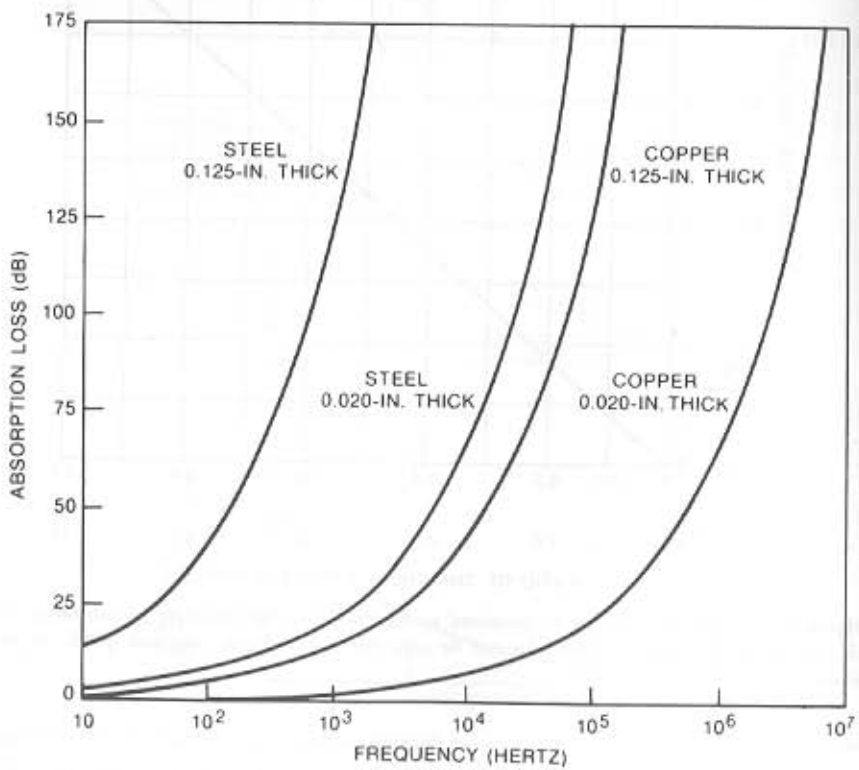

Figure 6-8. *Absorption loss increases with frequency and with shield thickness; steel offers more absorption loss than copper of the same thickness.*

one skin-depth thick is approximately 9 dB. Doubling the thickness of the shield doubles the loss in dB.

Figure 6-7 is a plot of absorption loss in dB versus the ratio t/δ. This curve is applicable to plane waves, electric fields, or magnetic fields.

Substituting Eq. 6-11b into Eq. 6-12b gives the following expression for the absorption loss:

$$\boxed{A = 3.34t\sqrt{f\mu_r\sigma_r} \quad \text{dB}.} \tag{6-13}$$

In this equation, t is equal to the thickness of the shield in inches. Equation 6-13 shows that the absorption loss (in dB) is proportional to the square root of the product of the permeability times the conductivity of the shield material. Table 6-1 lists the relative conductivity and permeability of various shield materials.

Absorption loss versus frequency is plotted in Fig. 6-8 for two thicknesses of copper and steel. As can be seen, a thin (0.02 in.) sheet of copper provides significant absorption loss (66 dB) at 1 MHz but virtually no loss at frequencies below 1000 Hz. Figure 6-8 clearly shows the advantage of steel over copper in providing absorption loss. Even when steel is used, however, a thick sheet must be used to provide appreciable absorption loss below 1000 Hz.

REFLECTION LOSS

The reflection loss at the interface between two media is related to the difference in characteristic impedances between the media as shown in Fig. 6-9. The intensity of the transmitted wave from a medium with impedance Z_1 to a medium with impedance Z_2 (Hayt, 1974) is

$$E_1 = \frac{2Z_2}{Z_1 + Z_2} E_0, \tag{6-14}$$

and

$$H_1 = \frac{2Z_1}{Z_1 + Z_2} H_0. \tag{6-15}$$

$E_0(H_0)$ is the intensity of the incident wave, and $E_1(H_1)$ is the intensity of the transmitted wave.

When a wave passes through a shield, it encounters two boundaries, as shown in Fig. 6-10. The second boundary is between a medium with impedance Z_2 and a medium with impedance Z_1. The transmitted wave $E_t(H_t)$ through this boundary is given by

$$E_t = \frac{2Z_1}{Z_1 + Z_2} E_1, \tag{6-16}$$

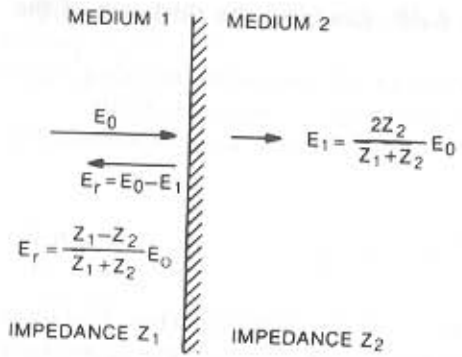

Figure 6-9. *An incident wave is partially reflected from, and partially transmitted through, an interface between two media. The transmitted wave is E_t and the reflected wave is E_r.*

and

$$H_t = \frac{2Z_2}{Z_1 + Z_2} H_1 . \tag{6-17}$$

If the shield is thick* compared to the skin depth, the total transmitted wave intensity is found by substituting Eqs. 6-14 and 6-15 into Eqs. 6-16 and 6-17, respectively. This neglects the absorption loss, which has been accounted for previously. Therefore, for thick shields the total transmitted wave is

$$E_t = \frac{4Z_1Z_2}{(Z_1 + Z_2)^2} E_0 , \tag{6-18}$$

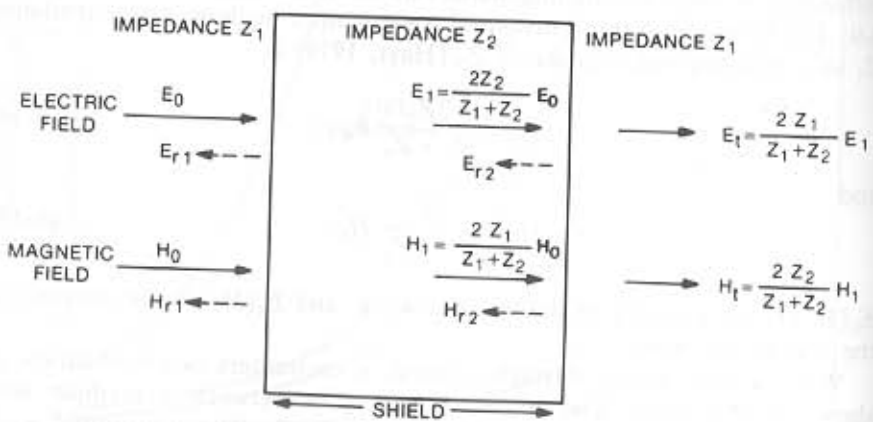

Figure 6-10. *Partial reflection and transmission occur at both faces of shield.*

*If the shield is not thick, multiple reflections occur between the two boundaries since the absorption loss in the shield is small. (See the section "Multiple Reflections in Thin Shields").

and

$$H_t = \frac{4Z_1Z_2}{(Z_1 + Z_2)^2} H_0 . \tag{6-19}$$

Note that even though the electric and magnetic fields are reflected differently at each boundary, the net effect across both boundaries is the same for both fields. If the shield is metallic and the surrounding area an insulator, then $Z_1 \gg Z_2$. Under these conditions the largest reflection (smallest transmitted wave) occurs when the wave enters the shield (first boundary) for the case of electric fields, and when the wave leaves the shield (second boundary) for the case of magnetic fields. *Since the primary reflection occurs at the first surface in the case of electric fields, even very thin materials provide good reflection loss.* In the case of magnetic fields, however, the primary reflection occurs at the second surface, and as will be shown later, multiple reflections within the shield reduce the shielding effectiveness. When $Z_1 \gg Z_2$, Eqs. 6-18 and 6-19 reduce to

$$E_t = \frac{4Z_2}{Z_1} E_0 , \tag{6-20}$$

and

$$H_t = \frac{4Z_2}{Z_1} H_0 . \tag{6-21}$$

Substituting the wave impedance Z_w for Z_1, and the shield impedance Z_s for Z_2 the reflection loss, neglecting multiple reflections, for either the E or H field can be written as

$$R = 20 \log \frac{|Z_w|}{4|Z_s|} \quad \text{dB} , \tag{6-22}$$

where

Z_w = impedance of wave prior to entering the shield (Eq. 6-1),
Z_s = impedance of the shield (Eq. 6-5d).

These reflection loss equations are for a plane wave approaching the interface at normal incidence. If the wave approaches at other than normal incidence, the reflection loss increases with the angle of incidence. The results also apply to other than plane waves, since any arbitrary field can be constructed from the superposition of plane waves. The results also apply to a curved interface, provided the radius of curvature is much greater than the skin depth.

Reflection Loss to Plane Waves

In the case of a plane wave (far field), the wave impedance Z_w equals the characteristic impedance of free space Z_0 (377 Ω). Therefore Eq. 6-22 becomes

$$R = 20 \log \frac{94.25}{|Z_s|} \text{ dB}. \tag{6-23a}$$

Therefore, the lower the shield impedance, the greater is the reflection loss. Substituting Eq. 6-5d for $|Z_s|$ and rearranging Eq. 6-23a gives

$$\boxed{R = 168 + 10 \log (\sigma_r / \mu_r f) \text{ dB}.} \tag{6-23b}$$

Figure 6-11 is a plot of the reflection loss for three materials: copper, aluminum, and steel. Comparing this with Fig. 6-8 shows that although steel has more absorption loss than copper, it has less reflection loss.

Reflection Loss in the Near Field

In the near field the ratio of the electric field to the magnetic field is no longer determined by the characteristic impedance of the medium. Instead, the ratio of the electric field to the magnetic field depends more on the characteristics of the source (antenna). If the source has high voltage and low current, the wave impedance is greater than 377 Ω, and the field will be a high-impedance, or electric, field. If the source has low voltage and high current, the wave impedance will be less than 377 Ω, and the field will be a low-impedance, or magnetic, field.

Since the reflection loss (Eq. 6-22) is a function of the ratio between the wave impedance and the shield impedance, the reflection loss varies with the

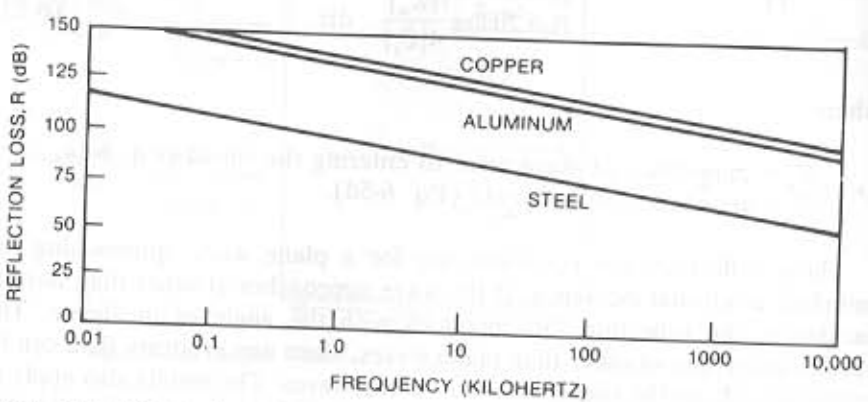

Figure 6-11. *Reflection loss for plane waves is greatest at low frequencies and for high conductivity material.*

wave impedance. A high-impedance (electric) field therefore has higher reflection loss than a plane wave. Similarly, a low-impedance (magnetic) field has lower reflection loss than a plane wave. This is shown in Fig. 6-12 for a copper shield separated from the source by distances of 1 and 30 m. Also shown for comparison is the plane wave reflection loss.

For any specified distance between source and shield, the three curves (electric field, magnetic field, and plane wave) of Fig. 6-12 merge at the frequency that makes the separation between source and shield equal to $\lambda/2\pi$. When the spacing is 30 m, the electric and magnetic field curves come together at a frequency 1.6 MHz.

The curves shown in Fig. 6-12 are for point sources producing only an electric field or only a magnetic field. Most practical sources, however, are a combination of both electric and magnetic fields. The reflection loss for a practical source therefore lies somewhere between the electric field lines and the magnetic field lines shown in the figure.

Figure 6-12 shows that the reflection loss of an electric field decreases with frequency until the separation distance becomes $\lambda/2\pi$. Beyond that, the reflection loss is the same as for a plane wave. The reflection loss of a magnetic field increases with frequency, again until the separation distance becomes $\lambda/2\pi$. Then the loss begins to decrease at the same rate as that of a plane wave.

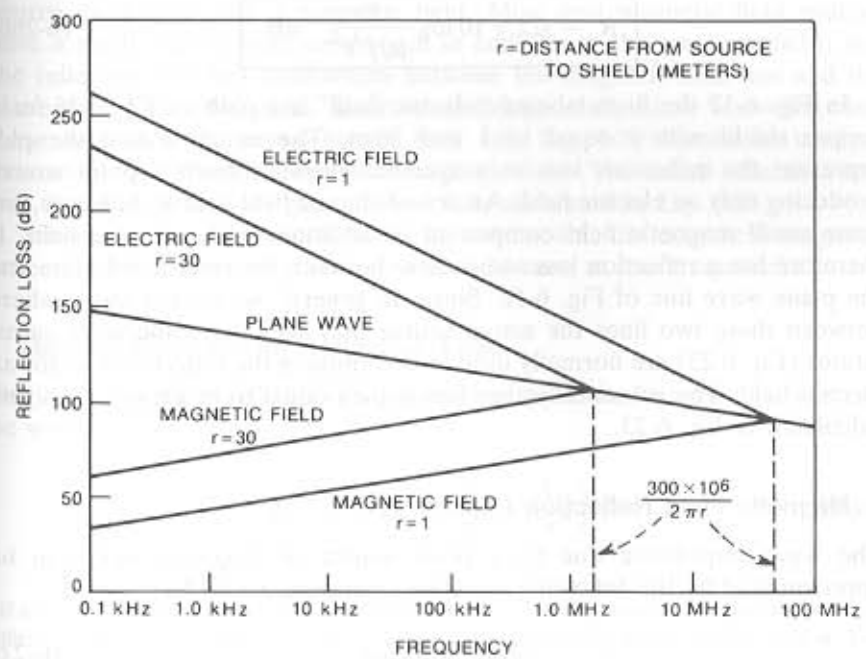

Figure 6-12. *Reflection loss in a copper shield varies with frequency, distance from the source, and type of wave.*

Electric Field Reflection Loss

The wave impedance due to a point source of electric field can be approximated by the following equation when $r < \lambda/2\pi$:

$$|Z_w|_e = \frac{1}{2\pi f \epsilon r}, \tag{6-24}$$

where r is the distance from the source to the shield in meters and ϵ is the dielectric constant. The reflection loss can be determined by substituting Eq. 6-24 into Eq. 6-22, giving

$$R_e = 20 \log \frac{1}{8\pi f \epsilon r |Z_s|} \quad \text{dB}, \tag{6-25}$$

or substituting the free space value of ϵ

$$R_e = 20 \log \frac{4.5 \times 10^9}{f r |Z_s|} \quad \text{dB}, \tag{6-26a}$$

where r is in meters. Substituting Eq. 6-5d for $|Z_s|$ and rearranging terms, Eq. 6-26a becomes

$$\boxed{R_e = 322 + 10 \log \frac{\sigma_r}{\mu_r f^3 r^2} \quad \text{dB}.} \tag{6-26b}$$

In Fig. 6-12 the lines labeled "electric field" are plots of Eq. 6-26 for a copper shield with r equal to 1 and 30 m. The equation and the plot represent the reflection loss at a specified distance from a point source producing only an electric field. An actual electric field source, however, has some small magnetic field component in addition to the electric field. It therefore has a reflection loss somewhere between the electric field line and the plane wave line of Fig. 6-12. Since, in general, we do not know where between these two lines the actual source may fall, the plane wave calculations (Eq. 6-23) are normally used in determining the reflection loss for an electric field. The actual reflection loss is then equal to or greater than that calculated in Eq. 6-23.

Magnetic Field Reflection Loss

The wave impedance due to a point source of magnetic field can be approximated by the following equation, assuming $r < \lambda/2\pi$:

$$|Z_w|_m = 2\pi f \mu r, \tag{6-27}$$

where r is the distance from the source to the shield and μ is the

permeability. The reflection loss can be determined by substituting Eq. 6-27 into Eq. 6-22, giving

$$R_m = 20 \log \frac{2\pi f \mu r}{4|Z_s|} \quad \text{dB}, \tag{6-28}$$

or substituting the free space value of μ

$$R_m = 20 \log \frac{1.97 \times 10^{-6} f r}{|Z_s|} \quad \text{dB}, \tag{6-29a}$$

where r is in meters. Substituting Eq. 6-5d for $|Z_s|$ and rearranging Eq. 6-29a gives

$$\boxed{R_m = 14.6 + 10 \log\left(\frac{f r^2 \sigma_r}{\mu_r}\right) \quad \text{dB},}^{*} \tag{6-29b}$$

with r in meters.

In Fig. 6-12 the curves labeled "magnetic field" are plots of Eq. 6-29 for a copper shield with r equal to 1 and 30 m. Equation 6-29 and the plot in Fig. 6-12 represent the reflection loss at the specified distance from a point source producing only a magnetic field. Most real magnetic field sources have a small electric field component in addition to the magnetic field, and the reflection loss lies somewhere between the magnetic field line and the plane wave line of Fig. 6-12. Since we do not generally know where between these two lines the actual source may fall, Eq. 6-29 should be used to determine the reflection loss for a magnetic field. The actual reflection loss will then be equal to or greater than that calculated in Eq. 6-29.

Where the distance to the source is not known, the near field magnetic reflection loss can usually be assumed to be zero at low frequencies.

General Equation for Reflection Loss

Neglecting multiple reflections a generalized equation for reflection loss can be written as

$$R = C + 10 \log\left(\frac{\sigma_r}{\mu_r}\right)\left(\frac{1}{f^n r^m}\right), \tag{6-30}$$

*If a negative value is obtained in the solution for R, use $R = 0$ instead and neglect the multiple reflection factor B. If a solution for R is positive and near zero, Eq. 6-29 is slightly in error. The error occurs because the assumption $Z_1 \gg Z_2$, made during the derivation of the equation, is not satisfied in this case. The error is 3.8 dB when R equals zero, and it decreases as R gets larger. From a practical point of view, however, this error can be neglected.

Table 6-3 Constants to Be Used in Eq. 6-30

Type of Field	C	n	m
Electric field	322	3	2
Plane wave	168	1	0
Magnetic field	14.6	−1	−2

where the constants C, n, and m are listed in Table 6-3 for plane waves, electric fields, and magnetic fields.

Equation 6-30 is equivalent to Eq. 6-23b for plane waves, Eq. 6-26b for electric fields, and Eq. 6-29b for magnetic fields. Equation 6-30 shows that the reflection loss is a function of the shield material's conductivity divided by its permeability.

Multiple Reflections in Thin Shields

If the shield is thin, the reflected wave from the second boundary is re-reflected off the first boundary, and then it returns to the second boundary to be reflected again, as shown in Fig. 6-13. This can be neglected in the case of a thick shield, since the absorption loss is high. By the time the wave reaches the second boundary for the second time, it is of negligible amplitude, since by then it has passed through the thickness of the shield three times.

For electric fields most of the incident wave is reflected at the first boundary, and only a small pecentage enters the shield. This can be seen from Eq. 6-14 and the fact that $Z_2 \ll Z_1$. Therefore multiple reflections within the shield can be neglected for electric fields.

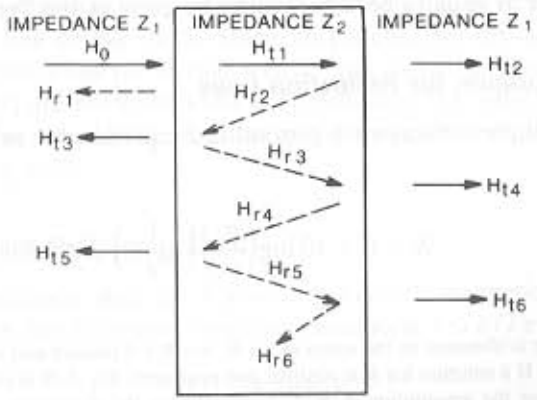

Figure 6-13. *Multiple reflections occur in a thin shield; part of the wave is transmitted through at each reflection.*

For magnetic fields most of the incident wave passes into the shield at the first boundary, as shown in Eq. 6-15 when $Z_2 \ll Z_1$. The magnitude of the transmitted wave is actually double that of the incident wave. With a magnetic field of such large magnitude within the shield, the effect of multiple reflections inside the shield must be considered.

The correction factor for the multiple reflection of magnetic fields in a shield of thickness t and skin depth δ is

$$\boxed{B = 20\log(1 - e^{-2t/\delta}) \quad \text{dB}\,.}^{*} \tag{6-31}$$

Figure 6-14 is a plot of the correction factor B as a function of t/δ. Note that the correction factor is a negative number, indicating that less shielding (than predicted by Eq. 6-30) is obtained from a thin shield due to reflection.

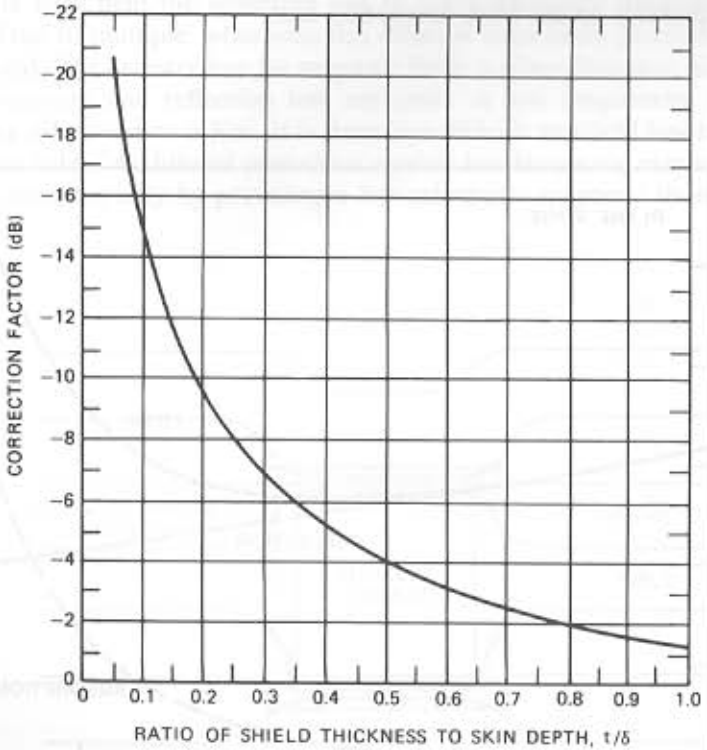

Figure 6-14. *Multiple reflection loss correction factor (B) for thin shields, with magnetic fields.*

*See Appendix C for this calculation.

COMPOSITE ABSORPTION AND REFLECTION LOSS

Plane Waves

The total loss for plane waves in the far field is a combination of the absorption and reflection losses, as indicated in Eq. 6-8. The multiple reflection correction term B is normally neglected for plane waves, since the reflection loss is so high and the correction term is small. If the absorption loss is greater than 1 dB, the correction term is less than 11 dB; if the absorption loss is greater than 4 dB, the correction is less than 2 dB.

Figure 6-15 shows the overall attenuation or shielding effectiveness of a 0.020-in. thick solid copper shield. As can be seen, the *reflection loss decreases with increasing frequency*; this is because the shield impedance Z_s increases with frequency. The *absorption loss, however, increases with frequency*, due to the decreasing skin depth. The minimum shielding effectiveness occurs at some intermediate frequency, in this case at 10 kHz. From Fig. 6-15 it is apparent that for low-frequency plane waves, reflection loss accounts for most of the attenuation, whereas most of the attenuation at high frequencies comes from absorption loss.

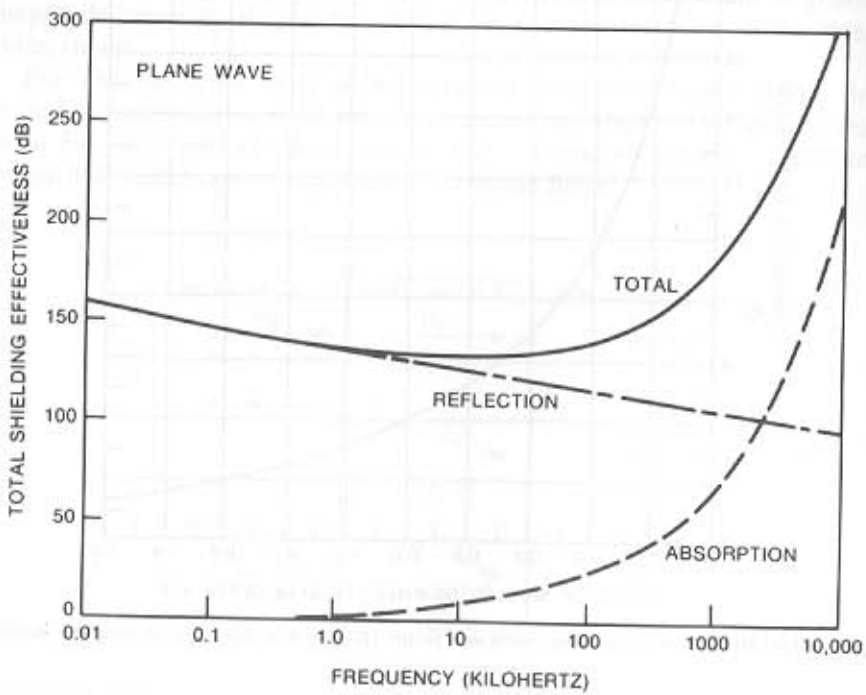

Figure 6-15. *Shielding effectiveness of a 0.02-in. thick copper shield in the far field.*

Electric Fields

The total loss for an electric field is obtained by combining the absorption (Eq. 6-13) and reflection losses (Eq. 6-26), as indicated in Eq. 6-8. The multiple reflection correction factor B is normally neglected in the case of an electric field, since the reflection loss is so great and the correction term is small. At *low frequency*, reflection loss is the primary shielding mechanism for electric fields. At *high frequency*, absorption loss is the primary shielding mechanism.

Magnetic Fields

The total loss for a magnetic field is obtained by combining the absorption loss (Eq. 6-13) and the reflection loss (Eq. 6-29), as indicated in Eq. 6-8. If the shield is thick (absorption loss >9 dB), the multiple reflection correction factor B can be neglected. If the shield is thin, the correction factor from Eq. 6-31 or Fig. 6-14 must be included.

In the near field the reflection loss to a low-frequency magnetic field is small. Due to multiple reflections this effect is even more pronounced in a thin shield. *The primary loss for magnetic fields is absorption loss*. Since both the absorption and reflection loss are small at low frequencies the total shielding effectiveness is low. It is therefore difficult to shield low-frequency magnetic fields. Additional protection against low-frequency magnetic fields can be achieved only by providing a low-reluctance magnetic shunt path to

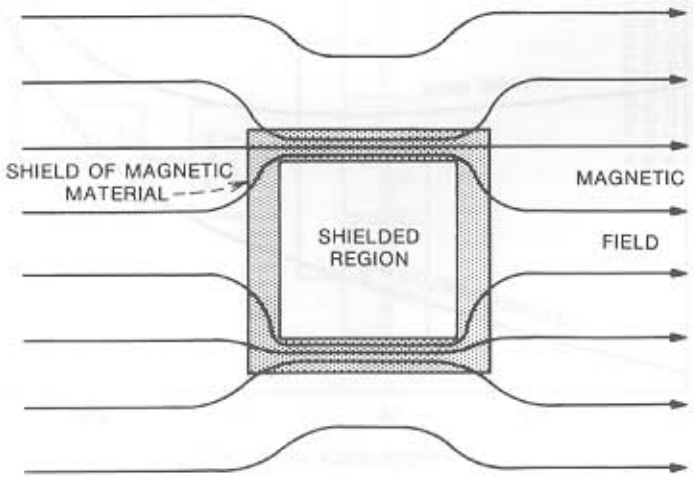

Figure 6-16. *Magnetic material used as a shield by providing a low-reluctance path for the magnetic field, diverting it around the shielded region.*

divert the field around the circuit being protected. This is shown in Fig. 6-16.

SUMMARY OF SHIELDING EQUATIONS

Figure 6-17 shows the composite shielding effectiveness of a 0.02-in. thick solid aluminum shield for an electric field, plane wave, and a magnetic field. As can be seen in the figure, there is considerable shielding in all cases exept for low-frequency magnetic fields.

At high frequencies (above 10 MHz), absorption loss predominates, and any *solid* shield thick enough to be practical provides more than adequate shielding for most applications.

Figure 6-18 is a summary showing which equations are used to determine shielding effectiveness under various conditions. A qualitative summary of the shielding provided by solid shields under various conditions is given in the summary at the end of this chapter.

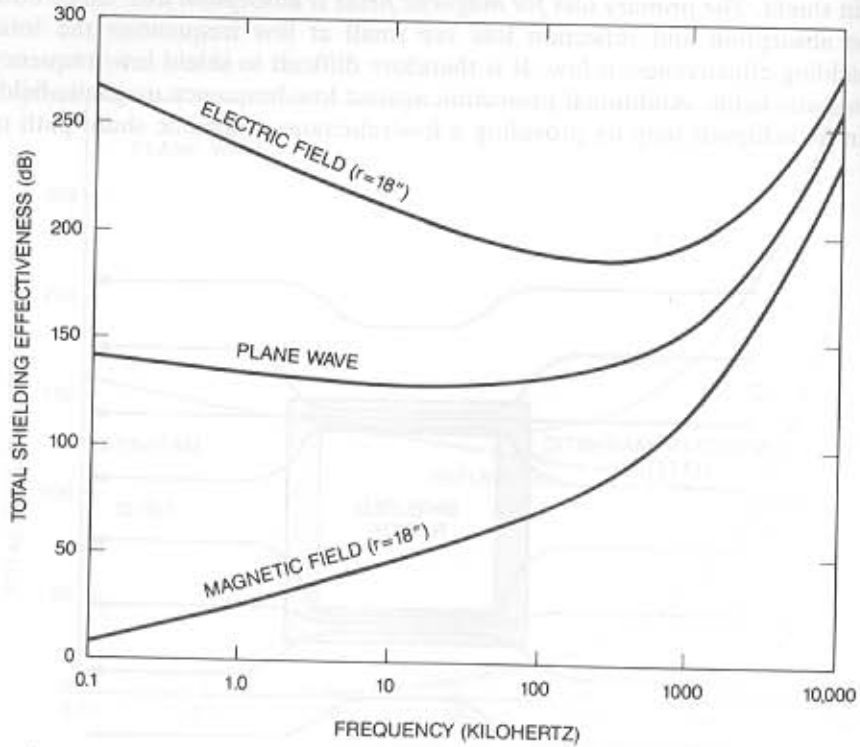

Figure 6-17. *Electric field, plane wave, and magnetic field shielding effectiveness of a 0.02-in. thick solid aluminum shield.*

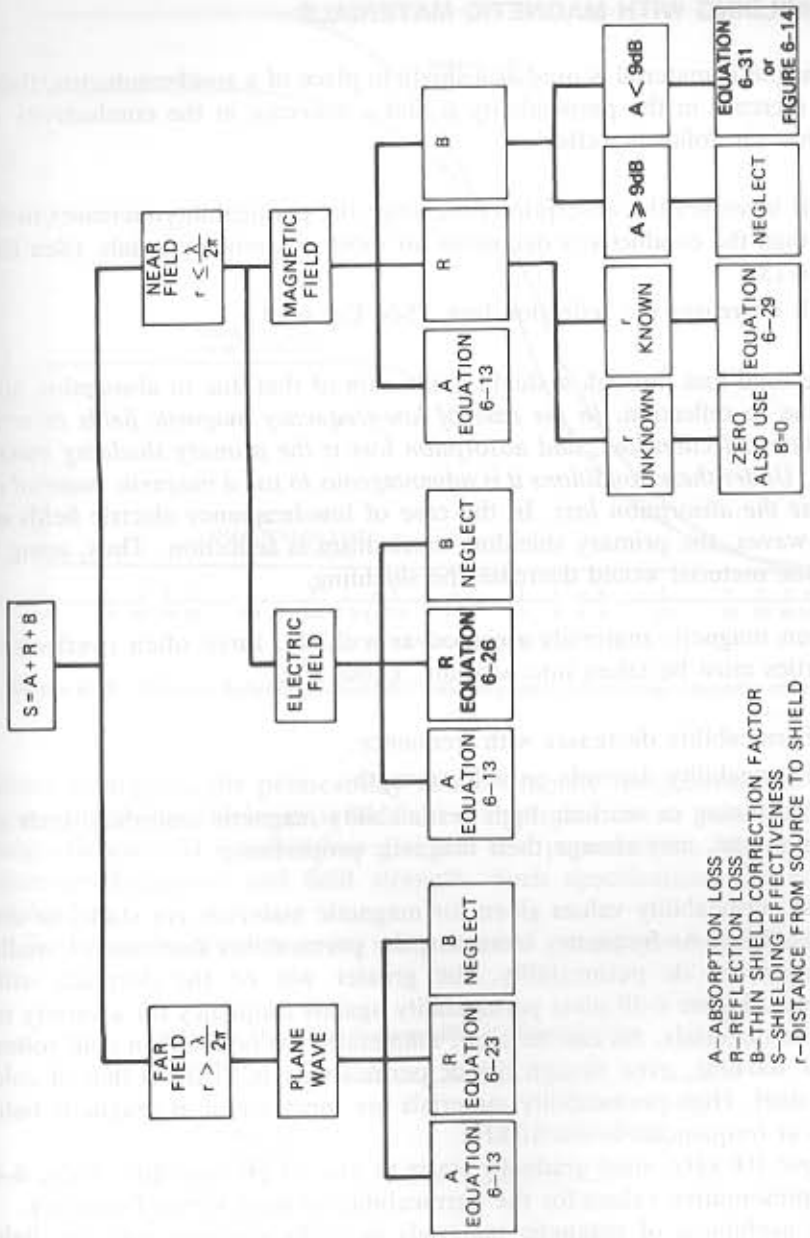

Figure 6-18. *Shielding effectiveness summary shows which equations are used to calculate shielding effectiveness under various conditions.*

SHIELDING WITH MAGNETIC MATERIALS

If a magnetic material is used as a shield in place of a good conductor, there is an increase in the permeability μ and a decrease in the conductivity σ. This has the following effects:

1. It increases the absorption loss, since the permeability increases more than the conductivity decreases for most magnetic materials. (See Eq. 6-13.)
2. It decreases the reflection loss. (See Eq. 6-30.)

The total loss through a shield is the sum of that due to absorption and that due to reflection. *In the case of low-frequency magnetic fields there is very little reflection loss, and absorption loss is the primary shielding mechanism. Under these conditions it is advantageous to use a magnetic material to increase the absorption loss.* In the case of low-frequency electric fields or plane waves, the primary shielding mechanism is reflection. Thus, using a magnetic material would decrease the shielding.

When magnetic materials are used as a shield, three often overlooked properties must be taken into account. These are:

1. Permeability decreases with frequency.
2. Permeability depends on field strength.
3. Machining or working high permeability magnetic materials, such as mumetal, may change their magnetic properties.

Most permeability values given for magnetic materials are static, or dc, permeabilities. As frequency increases, the permeability decreases. Usually the larger the dc permeability, the greater will be the decrease with frequency. Figure 6-19 plots permeability against frequency for a variety of magnetic materials. As can be seen, mumetal is no better than cold rolled steel at 100 kHz, even though the dc permeability is 13 times that of cold rolled steel. High-permeability materials are most useful as magnetic field shields at frequencies below 10 kHz.

Above 100 kHz, steel gradually starts to lose its permeability. Table 6-4 lists representative values for the permeability of steel versus frequency.

The usefulness of magnetic materials as a shield varies with the field strength, H. A typical magnetization curve is shown in Fig. 6-20. The static permeability is the ratio of B to H. As can be seen, maximum permeability, and therefore shielding, occurs at a medium level of field strength. At both higher and lower field strengths the permeability, and hence the shielding, is lower. The effect at high field strengths is due to saturation, which varies, depending on the type of material and its thickness. At field strengths well

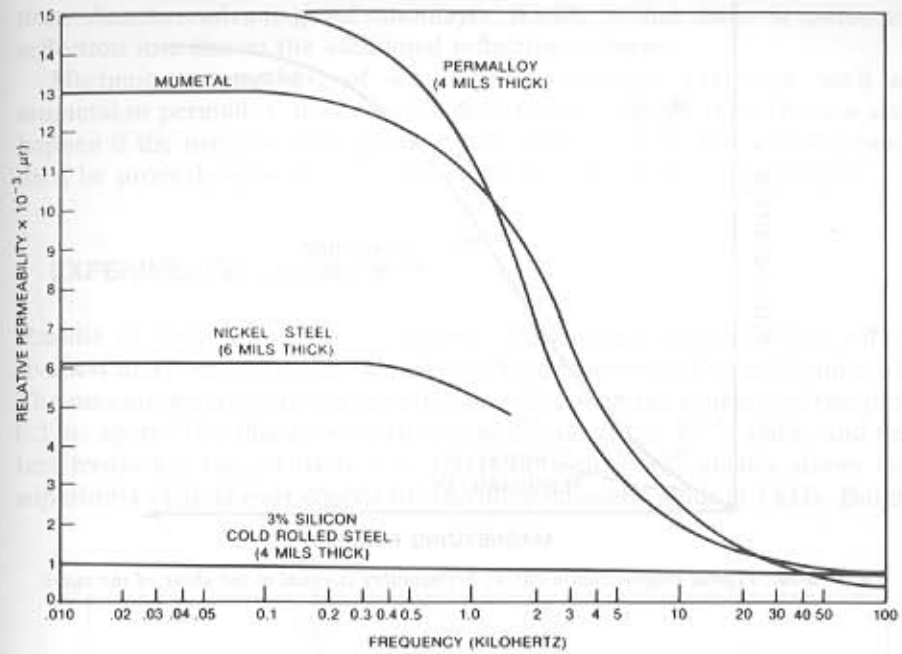

Figure 6-19. *Relation between permeability and frequency for various magnetic materials.*

above saturation, the permeability falls off rapidly. In general, the higher the permeability, the lower is the field strength that causes saturation. Most magnetic material specifications give the best permeability, namely that at optimum frequency and field strength. Such specifications can be very misleading.

To overcome the saturation phenomenon, multilayer magnetic shields

Table 6-4 Relative Permeability of Steel versus Frequency

Frequency (MHz)	Relative permeability, μ_r
0.0001	1000
0.0010	1000
0.0100	1000
0.1000	1000
1.0000	700
10.0000	500
100.0000	100
1,000.0000	50

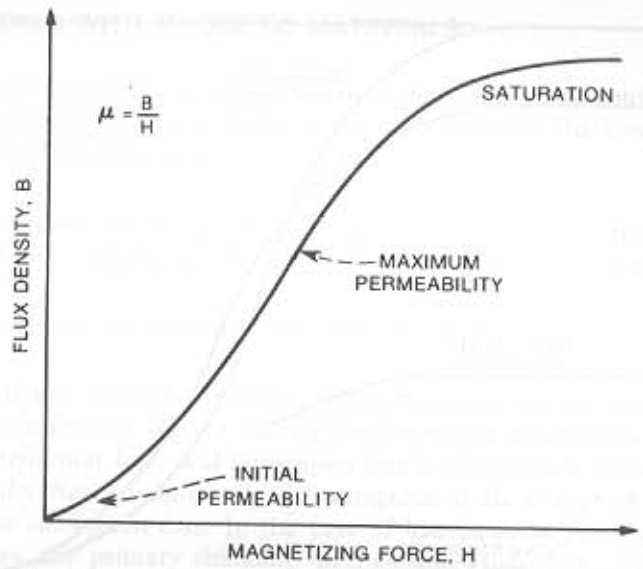

Figure 6-20. *Typical magnetization curve. Permeability is equal to the slope of the curve.*

can be used. An example is shown in Fig. 6-21. There, the first shield (a low-permeability material) saturates at a high level, and the second shield (a high-permeability material) saturates at a low level. The first shield reduces the magnitude of the magnetic field to a point that does not saturate the second; the second shield then provides the majority of the magnetic field shielding. These shields can also be constructed using a conductor, such as copper, for the first shield, and a magnetic material for the second. The low-permeability, high-saturation material is always placed on the side of the shield closest to the source of the magnetic field. In some difficult cases additional shield layers may be required to obtain the desired field attenuation. Another advantage of multilayer shields is that there is increased reflection loss due to the additional reflecting surfaces.

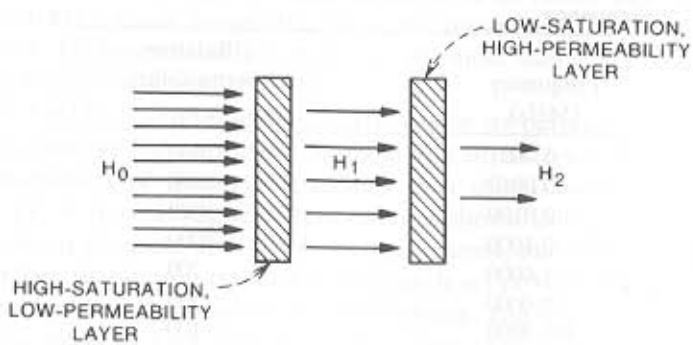

Figure 6-21. *Multilayer magnetic shields can be used to overcome the saturation phenomenon.*

Machining or working of some high-permeability materials, such as mumetal or permalloy, may degrade their magnetic properties. This can also happen if the material is dropped or subjected to shock. The material must then be properly annealed, in order to restore its magnetic properties.

EXPERIMENTAL DATA

Results of tests performed to measure the magnetic field shielding effectiveness of various types of metallic sheets are shown in Fig. 6-22 and 6-23. The measurements were made in the near field with the source and receptor 0.1 in. apart. The shields were from 3 to 60 mils (in. $\times 10^{-3}$) thick, and the test frequency ranged from 1 to 100 kHz. Figure 6-22 clearly shows the superiority of steel over copper for shielding magnetic fields at 1 kHz. But at

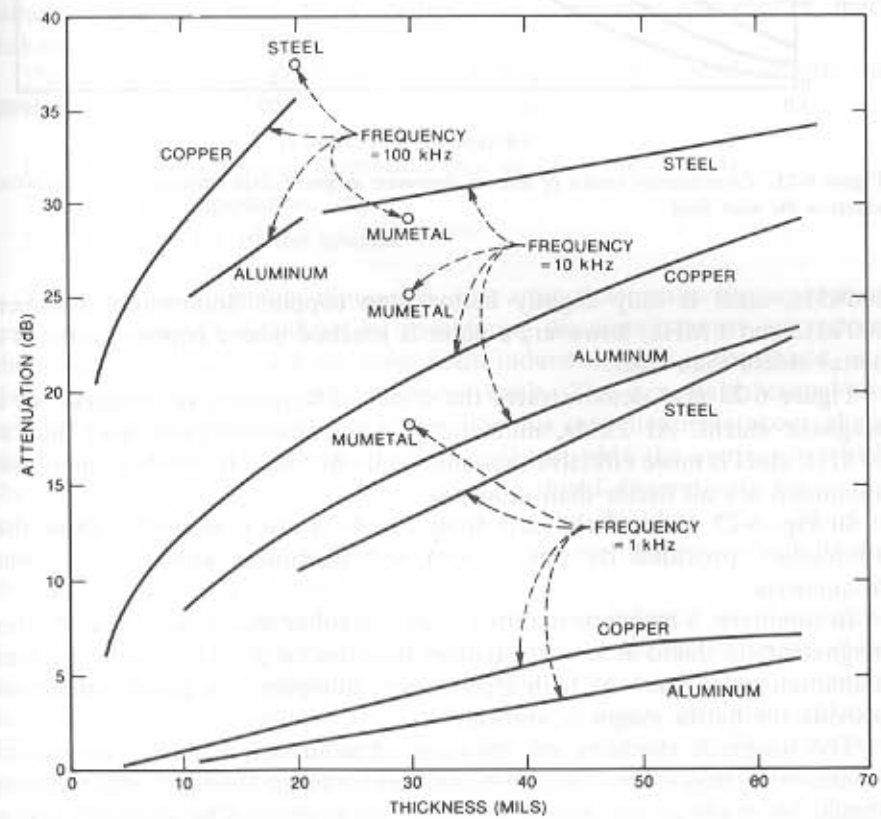

Figure 6-22. *Experimental data on magnetic attenuation by metallic sheets in the near field.*

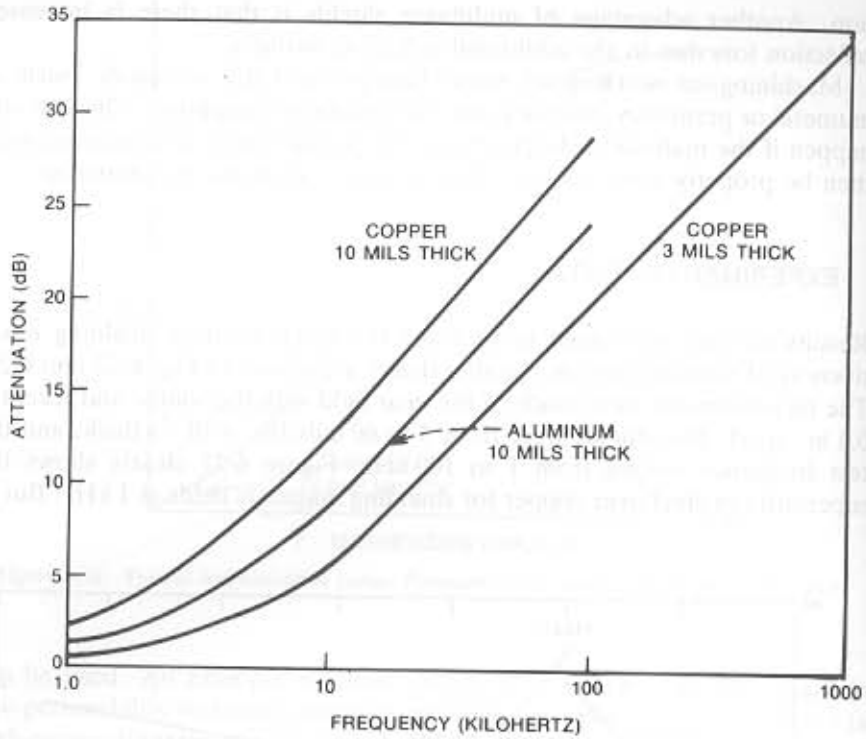

Figure 6-23. *Experimental results of tests to determine magnetic field attenuation of conducting sheets in the near field.*

100 kHz, steel is only slightly better than copper. Somewhere between 100 kHz and 1 MHz, however, a point is reached where copper becomes a better shield than steel.

Figure 6-22 also demonstrates the effect of frequency on mumetal as a magnetic shield. At 1 kHz, mumetal is more effective than steel, but at 10 kHz, steel is more effective than mumetal. At 100 kHz, steel, copper, and aluminum are all better than mumetal.

In Fig. 6-23 some of the data from Fig. 6-22 are replotted to show the attenuation provided by thin copper and aluminum shields at various frequencies.

In summary, a magnetic material such as steel or mumetal makes a better magnetic field shield at low frequencies than does a good conductor such as aluminum or copper. At high frequencies, however, the good conductors provide the better magnetic shielding.

The magnetic shielding effectiveness of solid, nonmagnetic shields increases with frequency. Therefore measurements of shielding effectiveness should be made at the lowest frequency of interest. The shielding effectiveness of magnetic materials may decrease with increasing frequency due

to the decreasing permeability. The effectiveness of nonsolid shields may also decrease with frequency due to the increased leakage through the holes.

APERTURES

The previous calculations of shielding effectiveness have assumed a solid shield with no apertures. It has been shown that with the exception of low-frequency magnetic fields, it is quite easy to obtain more than 90 dB of shielding effectiveness. In practice, however, most shields are not solid. There must be access covers, doors, holes for conductors, ventilation, switches, meters, and mechanical joints and seams. All of these may considerably reduce the effectiveness of the shield. *As a practical matter, the intrinsic shielding effectiveness of the material is of less concern than the leakage through seams, joints, and holes.*

Shield discontinuities usually have more effect on magnetic field leakage than on electric field leakage. Accordingly, greater emphasis is given to methods of minimizing the magnetic field leakage. In almost all cases these same methods are more than adequate for minimizing the electric field leakage.

The amount of leakage from a shield discontinuity depends mainly on three items:

1. *The maximum linear dimension (not area) of the opening.*
2. The wave impedance.
3. The frequency of the source.

The fact that maximum dimension, not area, determines the amount of leakage can best be visualized by considering the circuit theory aproach to shielding. In that approach the noise fields induce currents in the shield, and these currents then generate additional fields. The new fields cancel the original field in some regions of space. For this cancellation to occur, these shield currents must be allowed to flow undisturbed in the manner in which they were induced by the incident field. If a shield discontinuity forces the induced currents to flow in a different path, the shielding effectiveness is reduced. The further the current is forced to detour, the greater will be the decrease in shielding effectiveness.

Figure 6-24 shows how discontinuities affect the induced shield currents. Figure 6-24A shows a section of shield containing no discontinuity. Also shown are the induced shield currents. Figure 6-24B shows how a rectangular slot detours the induced shield currents and hence produces leakage. Figure 6-24C shows a much narrower slot of the same length. This narrower slot has almost the same effect on the current as the wider slot of Fig. 6-24B and therefore produces the same amount of leakage. Figure 6-24D shows that a group of small holes has much less detouring effect on the current

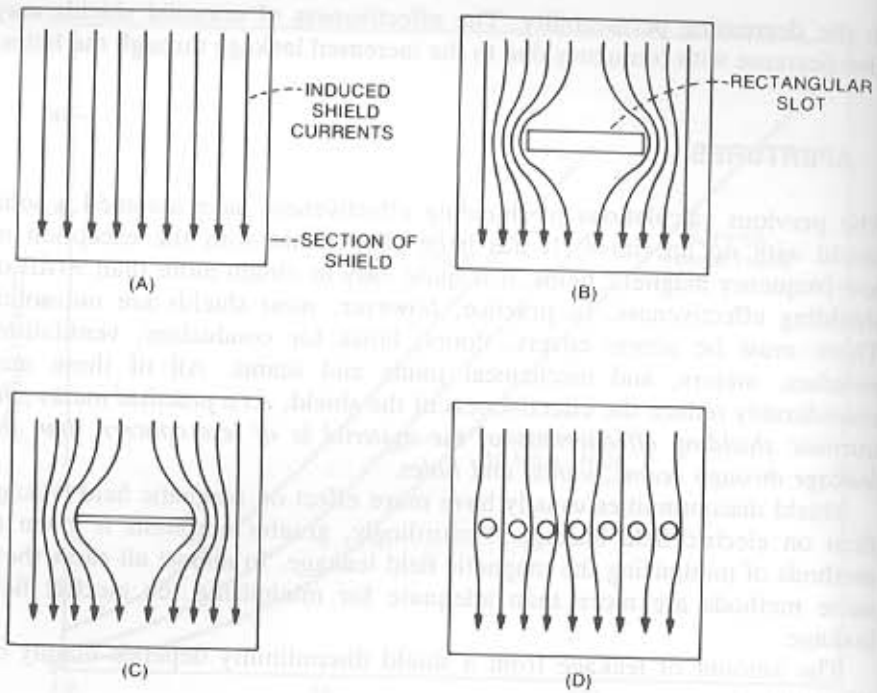

Figure 6-24. *Effect of shield discontinuity on magnetically induced shield current.*

than the slot of Fig. 6-24B, and therefore produces less leakage even if the total area is the same as the slot. From this it should be obvious that *a large number of small holes produce less leakage than a large hole of the same total area.*

A rectangular slot as shown in Fig. 6-24B and C forms a slot antenna. Such an antenna, even if very narrow, can cause considerable leakage if it is longer than 1/100 wavelength. Seams and joints often form very efficient slot antennas. Maximum radiation occurs from a slot antenna when the length is equal to a half-wavelength.

For slots with a dimension equal to or less than a half-wavelength, the shielding effectiveness in decibels is equal to

$$S = 20 \log\left(\frac{\lambda}{2l}\right), \tag{6-32}$$

where λ is the wavelength, and l is the maximum dimension of the slot. Equation 6-32 shows that the shielding effectiveness is 0 dB when the slot is a half-wavelength long and increases 20 dB per decade as the length l is decreased. Reducing the slot length by one-half increases the shielding by 6 dB. Figure 6-25 shows the shielding effectiveness versus frequency for

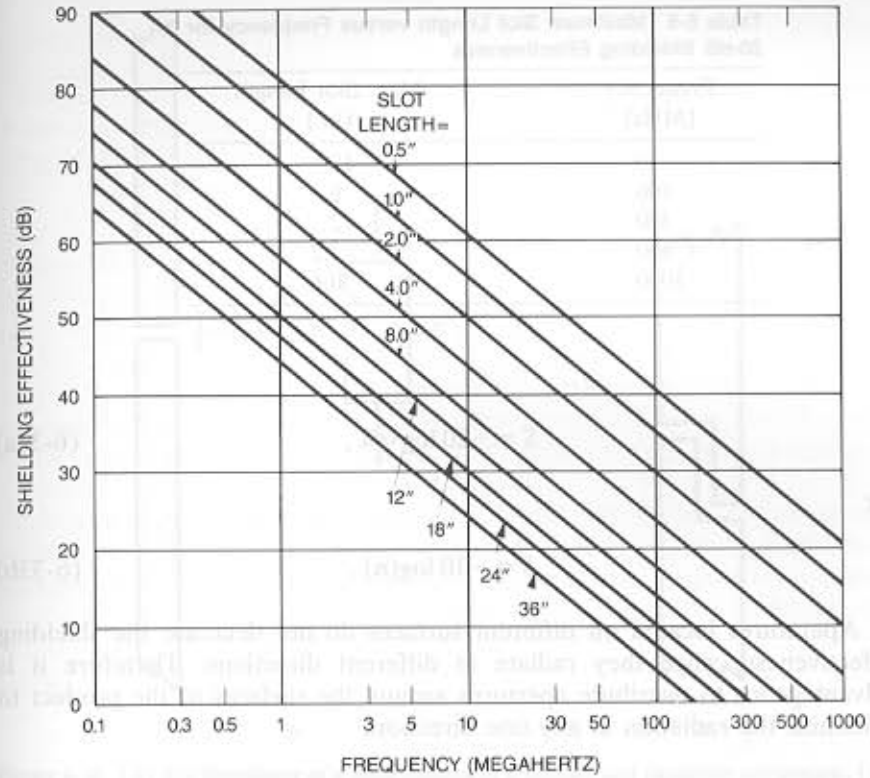

Figure 6-25. *Shielding effectiveness versus frequency and maximum slot length for a single aperture.*

various slot lengths. Both Eq. 6-32 and Fig. 6-25 represent the shielding effectiveness of one slot.

In controlling slot lengths for commercial products, it is best to avoid openings greater than 1/20 of a wavelength (this provides a shielding effectiveness of 20 dB). Table 6-5 gives the maximum slot lengths equivalent to 1/20 wavelength at various frequencies.

Multiple Apertures

More than one aperture reduces the shielding effectiveness. The amount of reduction depends on (1) the spacing between the apertures, (2) the frequency, and (3) the number of apertures.

When aperatures of equal size are placed close together (less than a half-wavelength), *the reduction in shielding effectiveness is approximately proportional to the square root of the number of apertures* (n). Therefore the shielding effectiveness in dB due to multiple apertures is

Table 6-5 Maximum Slot Length versus Frequency for 20-dB Shielding Effectiveness

Frequency (MHz)	Max. Slot Length (in.)
30	18
100	6
300	2
500	1.2
1000	0.6

$$S = -20 \log \sqrt{n}\,, \tag{6-33a}$$

or

$$S = -10 \log(n)\,. \tag{6-33b}$$

Aperatures located on different surfaces do not decrease the shielding effectiveness, since they radiate in different directions. Therefore it is advantageous to distribute apertures around the surfaces of the product to minimize the radiation in any one direction.

Seams

A seam is a long, narrow slot that may make electrical contact at various points along its length. Seams can be considered to be an array of slots.

The impedance across a seam consists of a resistive and a capacitive component, in parallel, as shown in Fig. 6-26A. Due to the capacitive component the impedance of the joint decreases with frequency; hence the shielding effectiveness often increases with frequency. The impedance of a seam depends on many factors: the material at the interface, contact pressure, and the surface area. An overlap of $\frac{1}{4}$ to $\frac{1}{2}$ in. can be helpful in reducing seam impedance (Fig. 6-26B).

The material on both sides of a seam (either with or without a conductive gasket) should be conductive. Most metals require a conductive finish. Some acceptable conductive finishes are listed in Table 6-6. Most other finishes, such as anodizing and black chromate, are nonconductive and should not be used. For stainless steel, passivation is adequate.

Along the length of a seam there should be firm electrical contact at intervals small enough to provide the desired shielding effectiveness. Contact can be obtained by using (1) multiple fasteners, (2) contact buttons, (3) contact fingers, or (4) conductive gaskets. Continuous electrical contact

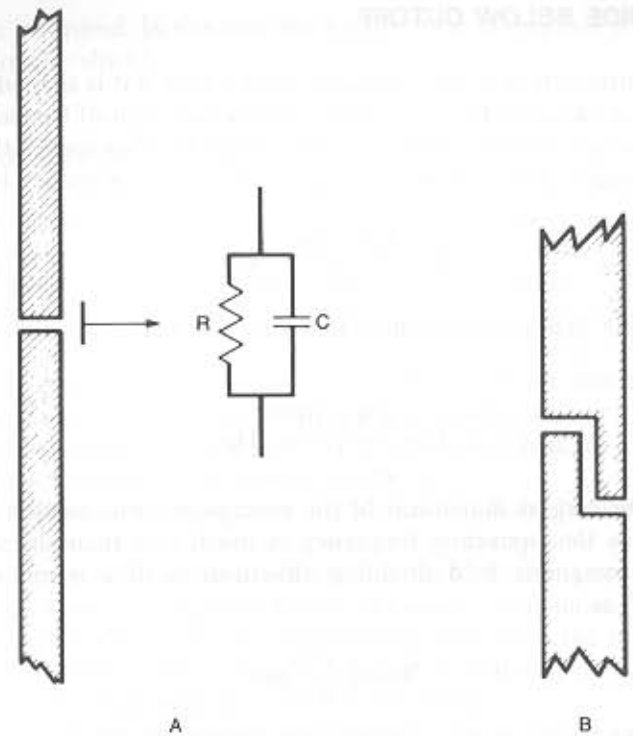

Figure 6-26. *(A) The impedance of a seam consists of a resistive and capacitive component; (B) seam overlap increases the capacitance across the joint.*

along the seam, although desirable, is not required except when very large amounts of shielding are required.

In present-day digital systems significant harmonics exist up to 300 to 500 MHz. Since contact should exist at least at every 1/20 of a wavelength, the spacing between contact-producing points should not exceed 1 to 2 in. Shorter gaps are required to allow for multiple apertures.

Table 6-6 Conductive Finishes for Metals

For Aluminum	For Carbon Steel
Clear chromate (irridite)	Zinc chromate
Yellow chromate	Zinc plate
Tin plate	Cadmium plate
Nickel plate	Tin plate
Alodine	Nickel plate
Conductive paints	Conductive paints

WAVEGUIDE BELOW CUTOFF

Additional attenuation can be obtained from a hole if it is shaped to form a waveguide, as shown in Fig. 6-27. A waveguide has a cutoff frequency below which it becomes an attenuator. The attenuation is a function of the length t of the waveguide. For a round waveguide the cutoff frequency is

$$f_c = \frac{6.9 \times 10^9}{d} \quad \text{Hz}, \tag{6-34}$$

where d is the diameter in inches. For a rectangular waveguide the cutoff frequency is

$$f_c = \frac{5.9 \times 10^9}{l} \quad \text{Hz}, \tag{6-35}$$

where l is the largest dimension of the waveguide cross section in inches.

As long as the operating frequency is much less than the cutoff frequency, the magnetic field shielding effectiveness of a round waveguide (Quine 1957) is

$$S = 32\,\frac{t}{d} \quad \text{dB}, \tag{6-36}$$

where d is the diameter and t is the length of the waveguide, as shown in Fig. 6-27. For a rectangular waveguide (Quine 1957)

$$S = 27.2\,\frac{t}{l} \quad \text{dB}, \tag{6-37}$$

where l is the largest linear dimension of the waveguide cross section and t is the length. A waveguide having a length three times its diameter provides greater than 100 dB of shielding.

If a hole in a shield has a diameter less than the shield thickness, a

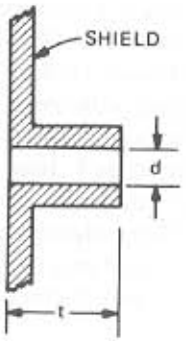

Figure 6-27. *Cross section of a hole formed into a waveguide with diameter d and length t.*

waveguide is formed. In this case the length of the waveguide is equal to the thickness of the shield.

CONDUCTIVE GASKETS

The ideal shield is a continuous conductive enclosure with no apertures. Joints made with continuous welding or brazing provide the maximum shielding. Rivets and screws make less desirable joints. If screws are used, they should be as close together as practical. Every attempt should be made to maintain electrical continuity across the joint to avoid forming a slot antenna. It may be desirable to use EMI gaskets on joints. These are conductive gaskets that, when properly compressed, provide electrical continuity across a joint. They are capable of controlling leakage at frequencies from the low kilohertz up to tens of gigahertz.

One of the most common types of EMI gaskets is made of a knitted wire mesh. The gaskets are available in strips, with rectangular or round cross sections, or in preformed shapes as well as in various materials, including steel-copper alloy, silver-plated brass, aluminum, and monel. The gasket material selected should be galvanically compatible with the mating surface to minimize corrosion. For this reason monel and silver-plated brass should not normally be used with an aluminum enclosure.

Figure 6-28 shows the correct and incorrect way to install an EMI gasket between an enclosure and its cover. The gasket should be in a slot and on the inside of the screw to protect against leakage around the screw hole. For electrical continuity across the joint or seam, the metal should be free of paints, oxides, and insulating films. The metal should be protected from corrosion with a conductive finish. Do not anodize aluminum; rather, use an alodine or chromate finish, both of which are conductive.

If both EMI protection and environmental protection are required, two separate gaskets or a combination EMI and environmental gasket may be used. The combination gasket usually has a knitted wire mesh mated to silicone rubber. If both environmental and EMI gaskets are installed either

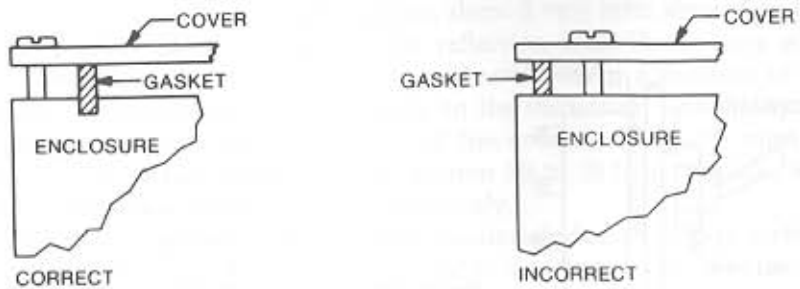

Figure 6-28. *EMI gaskets, correct and incorrect installation.*

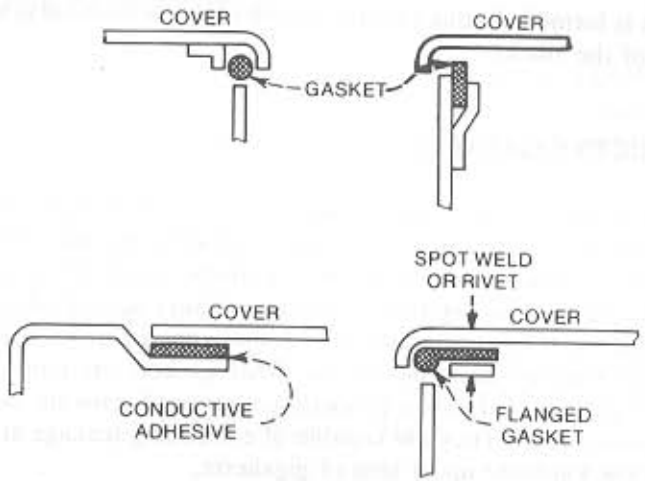

Figure 6-29. *Suitable ways to install EMI gaskets in sheet metal enclosures.*

as a combination unit or as two separate gaskets, the EMI gasket should be on the inside of the environmental gasket.

With a sheet metal enclosure the EMI gasket may be mounted by one of the methods shown in Fig. 6-29.

Perforated sheet stock or screening can be used to cover ventilation openings. The material must have electrical continuity between the strands where they cross. The entire perimeter of the screening must be in electrical contact with the chassis.

Conductive gaskets can be used around switches and controls mounted in the shield. These should be mounted as shown in Fig. 6-30. Large holes cut in panels for meters can completely destory the effectiveness of a shield. If meters are used in a shield panel, they should be mounted as shown in Fig. 6-31 in order to provide shielding of the meter hole. Wires entering the shield should be filtered as explained in Chapter 4. Shield enclosures should be electrically grounded.

For optimum shielding the enclosure should be thought of as "electrically watertight," with EMI gaskets used in place of normal environmental gaskets.

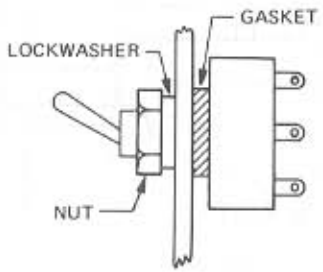

Figure 6-30. *Switch mounted in a panel using an EMI gasket.*

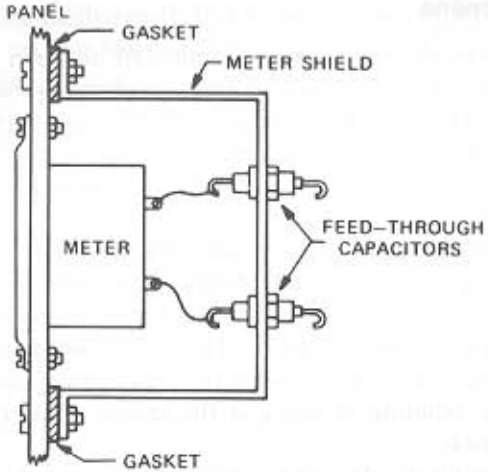

Figure 6-31. *Method of shielding a meter hole in a panel.*

CONDUCTIVE WINDOWS

Apertures used for visual displays, such as cathode ray tubes (CRT) and alphanumeric displays, are the most difficult to shield because they require a high degree of optical transparency. As a result special conductive windows are made for these applications. There are two primary types of conductive windows: (1) transparent conductive coatings and (2) wire mesh screens.

Transparent Conductive Coatings

Extremely thin, transparent conductive coatings can be vacuum deposited onto various optical substrates (plastic or glass). This approach results in good shielding properties with moderate optical transparency. Since the deposited film thickness is in micro-inches, there is very little absorption loss, and the primary shielding comes from reflection loss. Hence very good conductors are used. Since the shielding effectiveness is a function of the resistivity of the coating (which depends on the thickness), and the optical transparency depends on the thinness of the coating, trade-offs must be made. Typical surface resistivities range from 10 to 20 Ω per square, with optical transmission of 70 to 85%, respectively.

Typically gold is used as the deposited material, due to its high stability and good conductivity. The cost of the gold is low since a very thin layer is used.

Wire Mesh Screens

A conductive wire mesh screen can be laminated between two clear plastic or glass sheets to form a shielding window. Another approach is to cast the wire mesh screen within a clear plastic. The primary advantage of these windows over coated windows is optical transparency. The wire mesh screens have transparencies of 65 to 98%, as opposed to 60 to 80% for conductive coatings.

Knitted wire mesh screens are typically made with 10 to 30 conductors per inch. These screens provide the highest optical transparency, typically 80 to 98%. More recently, woven wire mesh screens have become available with 80 to 150 conductors per inch. These screens provide the highest shielding effectiveness, with a somewhat reduced optical transparency. In all wire mesh screens, bonding of wires at the crossover is required for good shielding effectiveness.

Under most conditions the wire mesh screens provide better shielding than conductive coated windows. Their primary disadvantage is that they can inhibit viewing due to diffraction.

Mounting of Windows

The method used for mounting a shielding window is as important as the material of the window itself in determining the overall peformance of the window. Improper mounting may severely reduce the shielding effectiveness of a high-performance window. The mounting of a conductive window must be such that there is electrical contact between the wire mesh screen (or conductive coating) of the window and the conductive surface of the mounting enclosure, along the entire perimeter of the window.

CONDUCTIVE COATINGS

Plastics are popular for packaging electronic products. To provide shielding, these plastics must be made conductive, and there are two basic ways to do this: (1) coating the plastic with a conductive material, or (2) using a conductive filler molded into the plastic. When conductive plastics are used, the important considerations are the shielding effectiveness, the cost, and the aesthetic appeal of the final product.

Shielding effectiveness depends not only on the material used but also on the control of the leakage through seams and holes. Everything previously said about controlling apertures in metal shields is applicable to conductive plastic shields. Often the most expensive part of using conductive plastics is the controlling of the leakages through the apertures.

To be effective as electromagnetic shields, conductive plastics must have surface resistivities of a few ohms per square or less. To provide protection

against electrostatic discharge (ESD), however, considerably higher resistivities may be used, up to a few hundred ohms per square. Therefore carbon or graphite materials, although useful against ESD, do not provide much protection to EMI.

Some of the more common methods of producing a conductive plastic enclosure are

1. Conductive paints
2. Flame/arc spray
3. Vacuum metalizing
4. Electroless plating
5. Metal foil linings
6. Metallic fillers molded into the plastic

Currently, conductive paints and flame/arc sprays are the least expensive methods, and they account for the majority of conductively coated enclosures used commercially. Electroless plating and filled plastics show promise for the future.

Conductive Paints

The majority of electronic products used today are coated with conductive paints. The coating consists of a binder (usually urethane or acrylic) and a conductive pigment (silver, copper, nickel, or graphite). A typical mixture can contain as much as 80% metal and only 20% organic binder. Conductive paints provide good conductivity. They can easily be applied with standard spray equipment and are inexpensive (except for silver). Nickel is the most common material used.

Flame/Arc Spray

In the flame/arc spray method a metal wire or powder, usually zinc, is melted in a special spray gun and deposited onto the plastic material. This method produces a hard, dense coating of metal with excellent conductivity. Its disadvantage is that the application process requires special equipment and skill. Therefore this method is more expensive than spray painting, but it is the second most common method in use today.

Vacuum Metalizing

In the vacuum-metalizing method a pure metal, usually aluminum, is boiled in a vacuum chamber and deposited onto the surface of the plastic parts in the chamber. This produces excellent adhesion and conductivity, so it can be applied to complex designs. The disadvantage of this method is that very expensive special equipment is required.

Electroless Plating

Electroless plating—or chemical deposition which is a more accurate name—consists of depositing a metallic coating (usually nickel) by a controlled chemical reaction that is catalyzed by the metal being deposited. It produces a uniform film-thickness with very good conductivity and can be applied to simple or complex parts with no waste. It is economically competitive with the previous two methods.

Metal Foil Linings

A pressure-sensitive metallic foil (usually copper or aluminum), with an adhesive backing, is applied to the interior of the plastic part. The metal foil lining provides very good conductivity, and this is a method for coating parts used in experimental work. It is not desirable for production work because it is too slow and requires a lot of labor. Complex parts are difficult to coat.

Filled Plastics

Conductive plastics can be produced by mixing a conductive agent with the plastic resin prior to molding. The result is an injection-moldable composite. The conductive material may be in the form of fibers, flakes, or powders. A wide range of conductivity can be achieved by this approach, without the necessity of a second coating operation. Typical conductive fillers are carbon fibers, aluminum flakes, nickel-coated carbon fibers, or stainless steel fibers.

Loading levels of conductive fillers can vary from 10 to 40% in order to get the desired electrical properties. These high-loading levels often alter the mechanical properties, colorability, and asethetics of the base material, to the point where the altered mechanical properties no longer fit the application.

The primary advantage of filled plastics is that the secondary step of coating the material to achieve conductivity can be eliminated. However, since the conductive material is inside the plastic, the surface may not be conductive. This makes the controlling of the conductivity across the seams and joints difficult. A secondary machining operation may be necessary on the edges of the material to expose the conductive material.

CAVITY RESONANCE

Energy enclosed in a metal box will bounce off the box's interior walls. If electromagnetic energy gets inside the box (due to a source of energy inside the box or to leakage of external energy into the box), the box will act as a cavity resonator. As the energy bounces (reflects) from one surface to another, it produces standing waves within the box. The lowest resonant

frequency of such an enclosure is

$$f = \frac{212}{l}, \tag{6-38}$$

where f is the resonant frequency in MHz and l is the largest dimension of the enclosure in meters.

GROUNDING OF SHIELDS

A solid shield that completely surrounds a product can be at any potential and still provide effective shielding. That is, it will prevent outside influences from affecting circuits inside the shield, and vice versa. Thus the shield does not need to be grounded nor to have its potential defined in any way. The only requirement is that the shield completely enclose the object being protected and that the object have no connection to the outside world.

In most practical instances, however, the shield is not a complete enclosure, and the object inside does have connections to the outside world, either directly—through signal and/or power leads—or indirectly—through stray capacitance due to holes in the shield. In such cases the shield must be grounded in order to prevent it's noise potential from coupling to the enclosed object. An ungrounded shield's potential will vary with conditions and location, and therefore the noise coupled to the object inside will vary also.

Grounding has a number of additional, beneficial results. It provides a path for rf currents to flow on the structure; it also prevents the buildup of ac potentials on the equipment enclosure. It provides a fault-current return path to protect personnel from shock hazards, and it prevents the buildup of static charge. For these reasons, in almost all cases, shields should be grounded.

All metallic parts of a system should be interconnected and grounded. Each part must have a low-impedance contact in at least two places. Screws can be used to clamp the parts if they have a conductive finish. Alternatively, star washers or thread-cutting screws can be used to cut through nonconductive paints or finishers.

SUMMARY

- All cables entering a shielded enclosure should be filtered.
- Shielded cables entering a shielded enclosure should have their shields bonded to the enclosure.
- Reflection loss is very large for electric fields and plane waves.
- Reflection loss is normally small for low-frequency magnetic fields.

- A shield one skin depth thick provides aproximately 9 dB of absorption loss.
- Magnetic fields are harder to shield against than electric fields.
- Use a magnetic material to shield against low-frequency magnetic fields.
- Use a good conductor to shield against electric fields, plane waves, and high-frequency magnetic fields.
- Absorption loss is a function of the permeability times the conductivity of the shield material.
- Reflection loss is a function of the conductivity divided by the permeability of the shield material.
- Shielding effectiveness decreases with the square root of the number of apertures, and directly with the maximum linear dimension of the aperture.
- Above 10 MHz, the absorption loss predominates, and any *solid* shield thick enough to be practical provides more than adequate shielding for most applications.
- Actual shielding effectiveness obtained in practice is usualy determined by the leakage at seams and joints, not by the shielding effectiveness of the material itself.
- The maximum dimension (not area) of a hole or discontinuity determines the amount of leakage.
- A large number of small holes result in less leakage than a larger hole of the same total area.
- Table 6-7 is a qualitative summary of shielding (solid shield, no holes or seams):

Table 6-7 Qualitative Summary of Shielding Effectiveness

Material	Frequency (kHz)	Absorption Loss[a] All Fields	Reflection Loss: Magnetic Field[b]	Reflection Loss: Electric Field	Reflection Loss: Plane Wave
Magnetic ($\mu_r = 1000$, $\sigma_r = 0.1$)	<1	Bad–poor	Bad	Excellent	Excellent
	1–10	Averaged–good	Bad–poor	Excellent	Excellent
	10–100	Excellent	Poor	Excellent	Good
	>100	Excellent	Poor–average	Good	Average–good
Non magnetic ($\mu_r = 1$, $\sigma_r = 1$)	<1	Bad	Poor	Excellent	Excellent
	1–10	Bad	Average	Excellent	Excellent
	10–100	Poor	Average	Excellent	Excellent
	>100	Average–good	Good	Excellent	Excellent
Key	*Attenuation*				
Bad	0–10 dB				
Poor	10–30 dB				
Average	30–60 dB				
Good	60–90 dB				
Excellent	>90 dB				

[a]Absorption loss for 1/32-in. thick shield.
[b]Magnetic field reflection loss for a source distance of 1 m. (Shielding is less if distance is less than 1 m, and more if distance is greater than 1 m.)

BIBLIOGRAPHY

Bardell, P. R. *Magnetic Materials in the Electrical Industry*. Macdonald and Co., London, 1960.

Burgoon, J. R., Jr. "Fundamentals of Electrical Shield Design." *Insulation/Circuits*, August 1970.

Cook, D. V. "RFI Suppression, Part I." *Electromechanical Design*, vol. 11, November 1967.

Cowdell, R. B. "Nomographs Simplify Calculations of Magnetic Shielding Effectiveness." *EDN*, vol. 17, September 1, 1972.

Ficchi, R. O. *Electrical Interference*. Hayden Book Co., New York, 1964.

Ficchi, R. O. *Practical Design for Electromagnetic Compatibility*. Hayden Book Co., New York, 1971.

Frederick Research Corp. *Handbook on Radio Frequency Interference*. Vol. 3 (Methods of Electromagnetic Interference Suppression). Frederick Research Corp., Wheaton, Md., 1962.

Gerteisen, S. R. "Conductive Thermoplastics Meet Shielding Demands." *Design News*, January 21, 1985.

Grant, P. M. "Design Guidelines to EMI Shielding Windows." TECKNIT EMI Shielding Products, Cranford, N.J., 1984.

Hayt, W. H., Jr. *Engineering Electromagnetics*. 3rd ed. McGraw-Hill, New York, 1974.

Jordan, E. C., and Balmain, K. G. *Electromagnetic Waves and Radiating Systems*. 2nd ed. Prentice-Hall, Englewood Cliffs, N. J., 1968.

Lantz, M., Moore, H. H., and Rackowski, D. "EMI/RFI Shielding." Borg-Warner Chemicals.

McHenry, G. A. "Audio Frequency Interference Considerations in Aircraft Electronic Systems Design." *Proceedings of the Conference on Radio Interference Reduction*. Armour Research Foundation, December 1954, pp. 121–133.

Miller, D. A., and Bridges, J. E. "Review of Circuit Approach to Calculate Shielding Effectiveness." *IEEE Transactions on Electromagnetic Compatibility*, vol. EMC-10, March 1968.

Quine, J. P. "Theoretical Formulas for Calculating the Shielding Effectiveness of Perforated Sheets and Wire Mesh Screens." *Proceedings of the Third Conference on Radio Interference Reduction*. Armour Research Foundation, February 1957, pp. 315–329.

Schelkunoff, S. A. *Electromagnetic Waves*. Van Nostrand, New York, 1943.

Severinsen, J. "Designers Guide to EMI Shielding," Parts 1 and 2, *EDN*, Vol. 20, February 5, 1975 and March 20, 1975.

Vasaka, C. S., "Problems in Shielding Electronic Equipment." *Proceedings of the Conference on Radio Interference Reduction*. Armour Research Foundation, December 1954, pp. 86–103.

Weeks, W. L. *Electromagnetic Theory for Engineering Applications*. Wiley, New York, 1964.

White, D. R. J. *Electromagnetic Interference and Compatibility*. Vol. 3 (EMI Control Methods and Techniques). Don White Consultants, Germantown, Md., 1973.

Young, F. J. "Ferromagnetic Shielding Related to the Physical Properties of Iron." *IEEE Electromagnetic Compatibility Symposium Record*. IEEE, New York, 1968.

7 CONTACT PROTECTION

Whenever contacts open or close a current-carrying circuit, electrical breakdown may develop between the contacts. This breakdown begins while the contacts are close together, but not quite touching. In the case of contacts that are closing, the breakdown continues until the contacts are closed. In the case of contacts that are opening, the breakdown continues until conditions can no longer support the breakdown. Whenever breakdown occurs, some physical damage is done to the contacts, decreasing their useful life. In addition breakdown can also lead to high-frequency radiation, and to voltage and current surges in the wiring. These surges may be the source of interference affecting other circuits.

The techniques used to minimize physical damage to the contacts are similar to those used to eliminate radiated and conducted interference. All of the contact protection networks discussed in this chapter greatly reduce the amount of noise generated by the contacts and the load, as well as extend the life of the contacts. Two types of breakdown are important in switching contacts. They are the gas or glow discharge and the metal-vapor or arc discharge.

GLOW DISCHARGES

A regenerative, self-supporting, glow discharge or corona can occur between two contacts when the gas between the contacts becomes ionized.* Such a breakdown is also called a Townsend discharge. The voltage necessary to initiate a glow discharge is a function of the gas, the spacing of the contacts, and the gas pressure. If the gas is air at standard temperature and pressure, 320 V is required at a gap length of 0.0003 in. to initiate a glow discharge. If the gap is shorter or longer, more voltage is required. Figure 7-1 shows the required breakdown voltage (V_B) for starting the glow discharge versus the separation distance of the contacts. After the breakdown occurs, a somewhat smaller voltage (V_G) is sufficient to keep the gas

*In a gas there are a few free electrons and ions present, due to radioactive decay, cosmic radiation, or light. When an electric field is applied, these free electrons and ions produce a small current flow. If the electric field is large enough, the electrons will attain sufficient velocity (energy) to break other electrons loose from neutral atoms or molecules with which they collide, thus ionizing the gas. This process becomes self-sustaining if the externally applied voltage can maintain the necessary electric field strength.

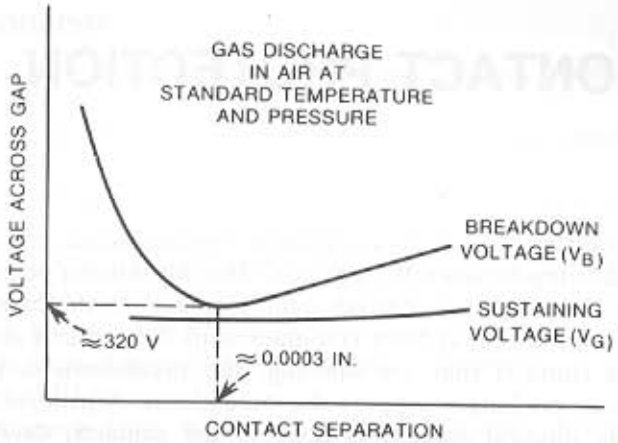

Figure 7-1. *Voltage versus distance for glow discharge.*

ionized. In air V_G is approximately 300 V. As can be seen in Fig. 7-1, this sustaining voltage is nearly constant regardless of the contact spacing. A minimum current is also necessary to sustain the glow; typically, this is a few milliamperes.

To avoid a glow discharge, the voltage across the contacts should be kept below 300 V. If this is done, the only concern is contact damage due to an arc discharge.

METAL-VAPOR OR ARC DISCHARGES

An arc discharge can occur at contact spacings and voltages much below those required for a glow discharge. It can even occur in a vacuum, since it does not require the presence of a gas. An arc discharge is started by field-induced electron emission,* which requires a voltage gradient of approximately 0.5 MV/cm (5 V at 4×10^{-6} in.).

An arc is formed whenever an energized, but unprotected, contact is opened or closed, since the voltage gradient usually exceeds the required value when the contact spacing is small. When the arc discharge forms, the electrons emanate from a small area of the cathode—where the electric field is strongest.

Since, on a microscopic scale, all surfaces are rough, the highest and sharpest point on the cathode has the largest voltage gradient and becomes

*Electrons in a metal are free to move around within the metal. Some of these electrons will have sufficient velocity to escape from the surface of the material. However, when they leave, they produce an electric field which pulls them back to the surface. If an external electric field is present with sufficient voltage gradient, it can overcome the force that normally returns the electrons to the surface. The electrons are, therefore, removed from the surface and set free.

the source of electrons for the field emission. This is shown in Fig. 7-2. The electron stream fans out as it crosses the gap and finally bombards the anode. The localized current has a very high density, and it heats the contact material (due to I^2R losses) to a few thousand degrees Kelvin. This may be enough to vaporize the contact metal. In general, either the anode or cathode may vaporize first, depending on the rates at which heat is delivered to and removed from the two contacts. This in turn depends on the size, material, and spacing of the contacts.

The appearance of molten metal marks the transition from field emission (electron flow) to a metal-vapor arc. This transition typically takes place in times less than a nanosecond. The molten metal, once present, forms a conductive "bridge" between the contacts, thus maintaining the arc even though the voltage gradient may have decreased below the value necessary to initiate the discharge. This metal-vapor bridge draws a current limited by the supply voltage and the impedance of the circuit. After the arc has started, it persists as long as the external circuit provides enough voltage to overcome the cathode contact potential and enough current to vaporize the anode or the cathode material. As the contacts continue to separate, the molten metal 'bridge" stretches and eventually ruptures. The minimum voltage and current required to sustain the arc are called the minimum arcing voltage (V_A) and the minimum arcing current (I_A). Typical values of minimum arcing voltage and current are shown in Table 7-1 (National Association of Relay Manufacturers, 1969). If either the voltage or current falls below these values, the arc is extinguished.

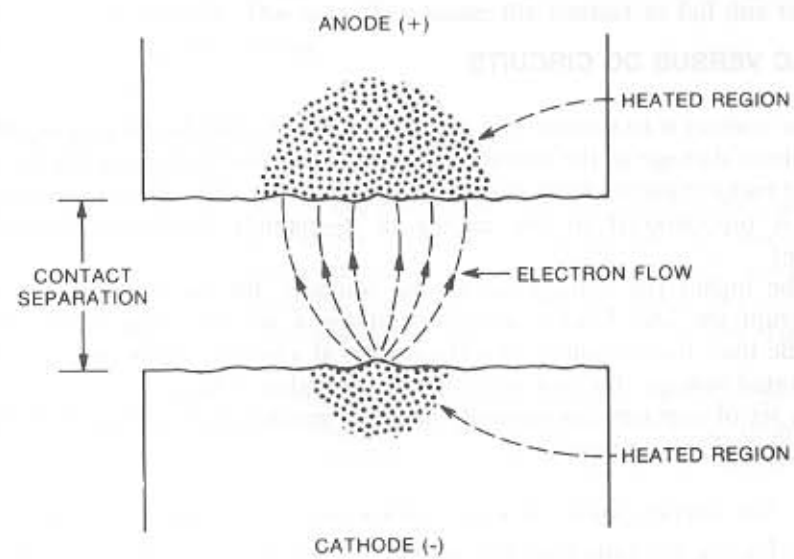

Figure 7-2. *Initiation of an arc discharge.*

Table 7-1 Contact Arcing Characteristics

Material	Minimum Arcing Voltage (V_A)	Minimum Arcing Current (I_A)
Silver	12	400 mA
Gold	15	400 mA
Gold alloy[a]	9	400 mA
Palladium	16	800 mA
Platinum	17.5	700 mA

[a]69% gold, 25% silver, 6% platinum.

For arcs between contacts of different materials, V_A is determined by the cathode (negative contact) material, and I_A is assumed to be whichever contact material (anode or cathode) has the lowest arcing current. Note, however, that the minimum arcing currents listed in Table 7-1 are for clean, undamaged contacts. After the contacts have become damaged from some arcing, the minimum arcing current may decrease to as low as one-tenth of the value listed in the table.

In summary, an arc discharge is a function of the contact material, and it is characterized by a relatively low voltage and a high current. In contrast, a glow discharge is a function of the gas, usually air, between the contacts, and it is characterized by a relatively high voltage and low current. As will be seen in a later section, it is difficult to prevent an arc discharge from forming, since only a low voltage is required. If the arc does form, however, it should be prevented from sustaining itself by keeping the available current below the minimum arcing current.

AC VERSUS DC CIRCUITS

If the contact is to survive, the arc, once formed, must be broken rapidly to minimize damage to the contact material. If it is not broken rapidly enough, some metal transfers from one contact to the other. The damage done by an arc is proportional to the energy in it—namely (voltage) × (current) × (time).

The higher the voltage across the contacts, the more difficult it is to interrupt the arc. Under arcing conditions a set of contacts can usually handle their rated number of volt-amperes at a voltage equal to or less than the rated voltage, but not necessarily at a higher voltage.

A set of contacts can normally handle a much higher ac than dc voltage, for the following reasons:

1. The average value of an ac voltage is less than the rms value.
2. During the time that the voltage is less than 10–15 V, an arc is very unlikely to start.

3. Due to polarity reversal, each contact is an anode and a cathode an equal number of times.
4. The arc will be extinguished when the voltage goes through zero.

A contact rated at 30 V dc can therefore typically handle 115 V ac. One disadvantage of switching ac, however, is that it is much harder to provide adequate contact protection networks when they are required.

CONTACT MATERIAL

Various load levels (currents) require different types of contact materials. No one material is useful from zero current (dry circuit) up to high current. Palladium is good for high-current loads under eroding contact conditions. Silver and silver cadmium operate well at high current but may fail under conditions of no arcing. Gold and gold alloys work well under low-level or dry-circuit conditions but erode excessively at high currents.

Many so-called "general purpose relays" are on the market, rated from dry circuit to 2 A. These are usually made by plating hard gold over a heavy load contact material such as silver or palladium. When used for low current, the contact resistance remains low due to the gold plating. When used for high load current, the gold is burned off during the first few operations, and the high current contact material remains. For this reason, once a general purpose relay is used with high currents, it is no longer usable in a low-current application.

A problem sometimes occurs when soft gold is plated over silver. The silver migrates through the gold and forms a high resistance coating (silver-sulfide) on the contact. This may then cause the contact to fail due to the high resistance surface coating.

CONTACT RATING

Contacts are normally rated by the maximum values of voltage and current they can handle feeding a resistive load. When a contact is operated at its rated conditions, there is some momentary arcing on "make" and "break."* When operated under these conditions a contact operates for a time equal to its rated electrical life. Ratings of mechanical life are for dry circuits (drawing no current).

Some contacts are also rated for an inductive load in addition to their resistive load rating. A third common rating is a motor or lamp rating for loads that draw much higher initial current than the normal steady-state current.

*A small amount of arcing may actually be useful in burning off any thin insulating film that has formed on the contacts.

All of these ratings assume that no contact protection is used. If proper contact protection is used, the rated voltage and/or current can be handled for a greater number of operations or a higher voltage and/or current can be handled for the rated number of operations.

LOADS WITH HIGH INRUSH CURRENTS

If the load is not resistive, the contacts must be appropriately derated or protected. Lamps, motors, and capacitive loads all draw much higher current when the contacts are closed than their steady-state current. The initial current in a lamp filament, for example, can be 10–15 times the normal rated current, as shown in Fig. 7-3. Typically, a contact is rated at only 20% of its normal resistive load capacity for lamp loads.

Capacitive loads also can draw extremely high initial currents. The charging current of a capacitor is limited only by the series resistance of the external circuit.

Motors typically draw initial currents that are 5–10 times their normal rated currents. In addition the motor inductance causes a high voltage to be generated when the current is interrupted (an inductive kick). This also causes arcing. Motors therefore are difficult to switch since they cause contact damage on both "make" and "break."

To protect a contact used in a circuit with high inrush current, the initial current must be limited. Using a resistor in series with the contact to limit the initial current is not always feasible, since it also limits the steady-state current. If a resistor is not satisfactory, a low dc resistance inductor can be used to limit the initial current. In some light duty applications, ferrite beads placed on the contact lead may provide sufficient initial current limiting, without affecting the steady-state current.

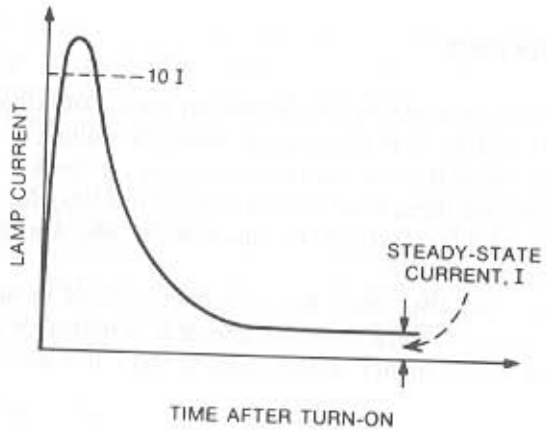

Figure 7-3. *Lamp current versus time.*

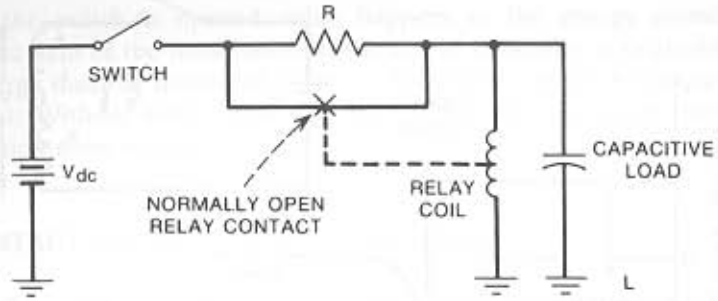

Figure 7-4. *Use of a switchable current-limiting resistor to protect a closing contact.*

In severe cases a switchable current-limiting resistor, as shown in Fig. 7-4, may be required. Here a relay is placed across the capacitive load with its normally open contact placed across the current-limiting resistor.* When the switch is closed, the capacitor charging current is limited by resistor R. When the voltage across the capacitor becomes large enough to operate the relay, the normally open contact closes, shorting out the current limiting resistor.

Another problem associated with closing contacts is chatter, or bounce. After the contacts initially touch, they may bounce open again and break the circuit. In some contacts this may continue for ten or more times, and each time the contacts must make and break the current. Not only can the repeated arcing cause operational problems in the circuit, but it produces considerably more contact damage and high-frequency radiation.

INDUCTIVE LOADS

The voltage across an inductance (L) is given by

$$V = L\left(\frac{di}{dt}\right). \tag{7-1}$$

This expression explains the large voltage transient encountered when the current through an inductor is suddenly interrupted. The rate of change, di/dt, becomes large and negative, resulting in the large reverse voltage transient or inductive "kick." Theoretically, if the current goes from some finite value to zero instantaneously, the induced voltage would be infinite. But in reality, contact arcing and circuit capacitance never let this happen. Nevertheless, very large induced voltages do occur. Suppression of high voltage inductive transients consists of minimizing the di/dt term.

*In place of the relay, a power FET (field effect transistor) could also be used.

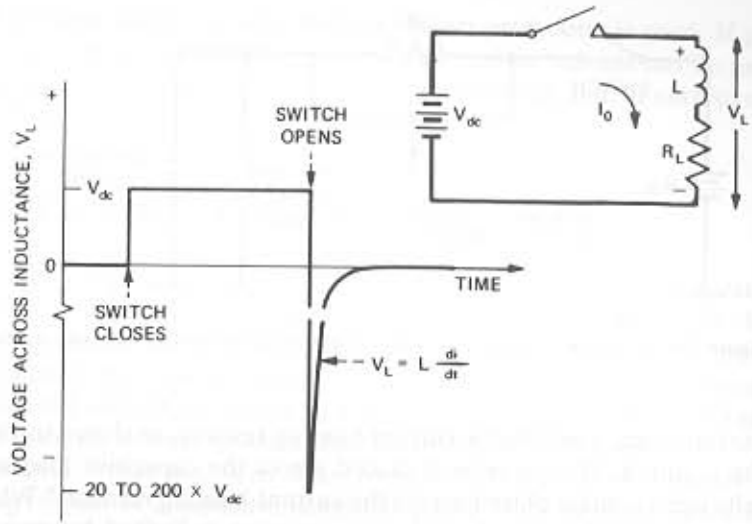

Figure 7-5. *Voltage across inductive load when switch closes and opens.*

It is not at all uncommon for an inductance operating from a 26-V dc power supply to generate voltages of 500–5000 V when the current through the inductor is suddenly interrupted. Figure 7-5 shows the voltage waveshape across an inductor as the current is interrupted. The high voltage generated when a contact breaks the current to an inductive load causes severe contact damage. It is also the source of radiated and conducted noise, unless appropriate contact protection circuits are used. Under such conditions most of the energy stored in the inductance is dissipated in the arc, causing excessive damage.

The circuit shown in Fig. 7-6 can be used to illustrate the damage done to a set of contacts by an inductive load. In this figure a battery is connected to an inductive load through a switch contact. The load is assumed to have negligible resistance. In practice, this condition can be approximated by a low resistance dc motor. The steady-state current becomes limited by the back EMF of the motor rather than the circuit resistance. Then let the switch be opened while a current I_0 is flowing through the inductance. The energy stored in the magnetic field of the inductance is equal to $(1/2)LI_0^2$.

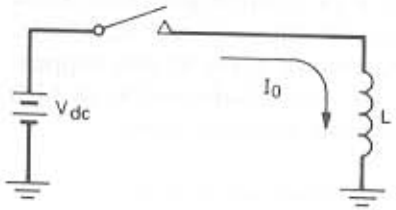

Figure 7-6. *Inductive load controlled by a switch. When the switch opens, most of the energy stored in the inductor is dissipated in the arc formed across the switch contacts.*

When the switch is opened, what happens to the energy stored in the magnetic field of the inductance? If the circuit resistance is negligible, all of the energy must be dissipated in an arc that forms across the contacts or be radiated. Without some type of protective circuitry, a switch used in this application does not last very long.

CONTACT PROTECTION FUNDAMENTALS

Figure 7-7 summarizes the conditions for contact breakdown in terms of the required voltage-distance relationships. The required breakdown voltage for starting a glow discharge is shown, as is the minimum voltage required to sustain the glow discharge. Also shown is a voltage gradient of 0.5 MV/cm, which is that required to produce an arc discharge. The minimum voltage required to maintain the arc discharge is also shown in this figure. The heavy line therefore represents the composite requirements for producing contact breakdown. To the right and below this curve, there is no breakdown, whereas above and to the left of this curve, contact breakdown occurs.

A more useful presentation of the breakdown information contained in Fig. 7-7 is to plot the breakdown voltage versus time, instead of distance. This conversion can be accomplished using the separation velocity of the

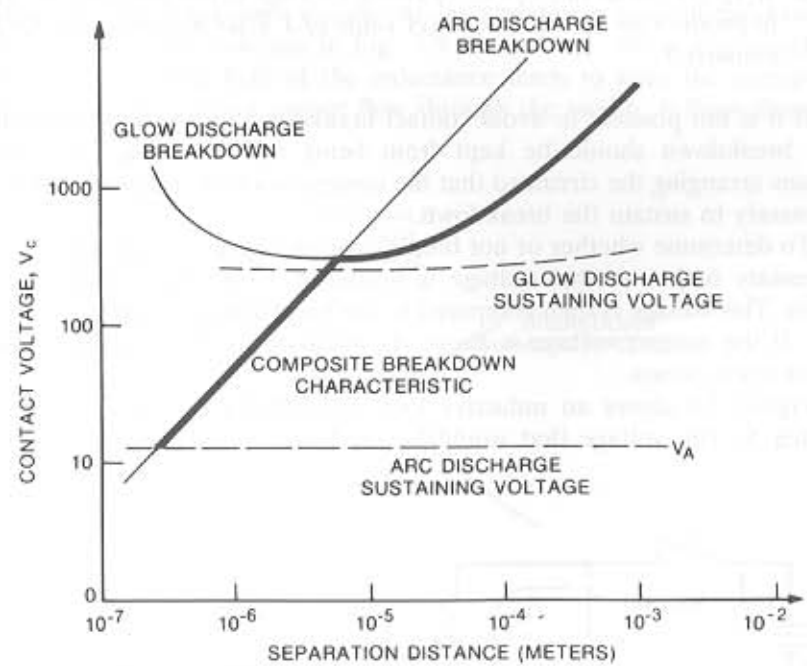

Figure 7-7. *Voltage-distance relationship for contact breakdown.*

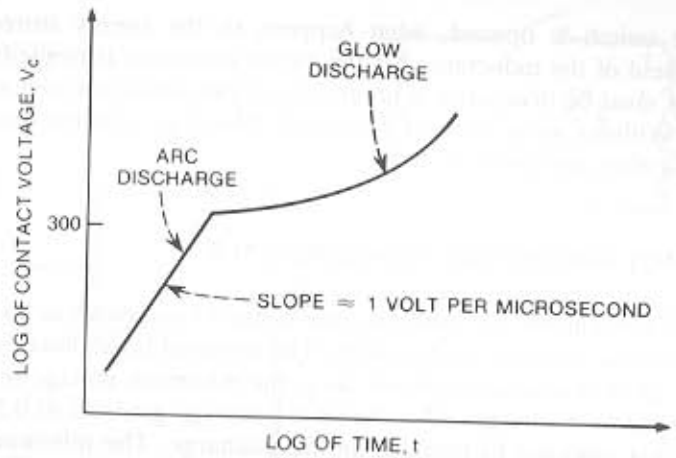

Figure 7-8. *Contact breakdown characteristics versus time.*

contacts. A typical composite breakdown characteristic as a function of time is shown in Fig. 7-8. As can be seen, there are two requirements for avoiding contact breakdown:

1. *Keep the contact voltage below 300 V to prevent a glow discharge.*
2. *Keep the initial rate of rise of contact voltage below the value necessary to produce an arc discharge. (A value of 1 V/μs is satisfactory for most contacts.)*

If it is not possible to avoid contact breakdown in a specific application, the breakdown should be kept from being self-sustaining. This usually means arranging the circuit so that the current available is always below that necessary to sustain the breakdown.

To determine whether or not breakdown can occur in a specific case, it is necessary to know what voltage is produced across the contacts as they open. This voltage is then compared to the breakdown characteristics in Fig. 7-8. If the contact voltage is above the breakdown characteristics, contact breakdown occurs.

Figure 7-9 shows an inductive load connected to a battery through a switch S. The voltage that would be produced across the contacts of the

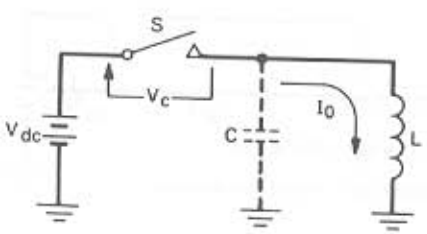

Figure 7-9. *Contact controlling an inductive load. Capacitor C represents the stray capacitance of the wiring.*

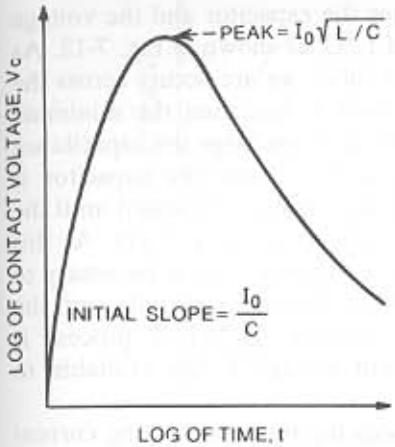

Figure 7-10. *Available circuit voltage across opening contact for circuit in Fig. 7-9, assuming no contact breakdown.*

opening switch, if no breakdown occurred, is called the "available circuit voltage." This is shown in Fig. 7-10 for the circuit in Fig. 7-9. I_0 is the current flowing through the inductor the instant the switch is opened, and C is the stray capacitance of the wiring. Figure 7-11 compares the available circuit voltage (Fig. 7-10) to the contact breakdown characteristics (Fig. 7-8). The voltage exceeds the breakdown characteristics from t_1 to t_2, and therefore contact breakdown occurs in this region.

Knowing that breakdown occurs, let us consider in more detail exactly what happens as the contacts in Fig. 7-9 are opened. When the switch is opened, the magnetic field of the inductance tends to keep the current I_0 flowing. Since the current cannot flow through the switch, it flows through

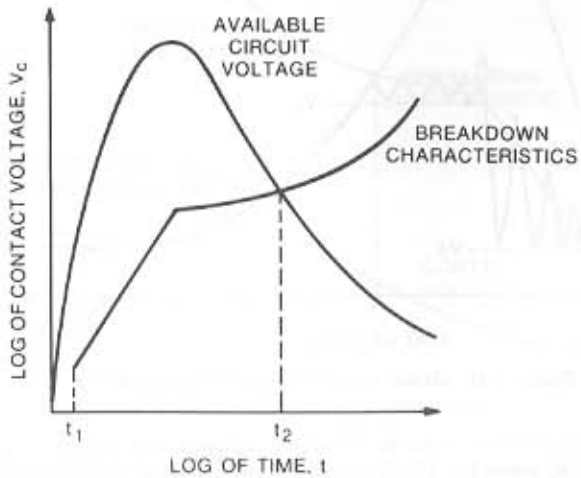

Figure 7-11. *Comparison of available circuit voltage and contact breakdown characteristics for circuit in Fig. 7-9.*

the stray capacitance C instead. This charges the capacitor and the voltage across the capacitor rises at an initial rate of I_0/C, as shown in Fig. 7-12. As soon as this voltage exceeds the breakdown curve, an arc occurs across the contacts. If the available current at this point is less than the minimum arcing current I_A, the arc lasts only long enough to discharge the capacitance C to a voltage below the sustaining voltage V_A. After the capacitor is discharged, the current again charges C and the process is repeated until the voltage exceeds the glow discharge voltage (point A in Fig. 7-12). At this point a glow discharge occurs. If the smaller sustaining current necessary to maintain the glow discharge is still not available, the glow lasts only until the voltage drops below the minimum glow voltage V_G.* This process is repeated until time t_1, after which sufficient voltage is not available to produce any additional breakdowns.

If at any time the available current exceeds the minimum arcing current I_A, a steady arc occurs and continues until the available voltage or current falls below the minimum glow voltage or current. Figure 7-13 shows the waveshape when sufficient current is available to maintain a glow discharge, but not enough for an arc discharge.

If the stray capacitance C is increased sufficiently, or if a discrete capacitor is placed in parallel with it, the peak voltage and the initial rate of rise of contact voltage can be reduced to the point where no arcing occurs. This waveshape is shown in Fig. 7-14. Using a capacitor this way, however, causes contact damage on closure due to the large capacitor charging current.

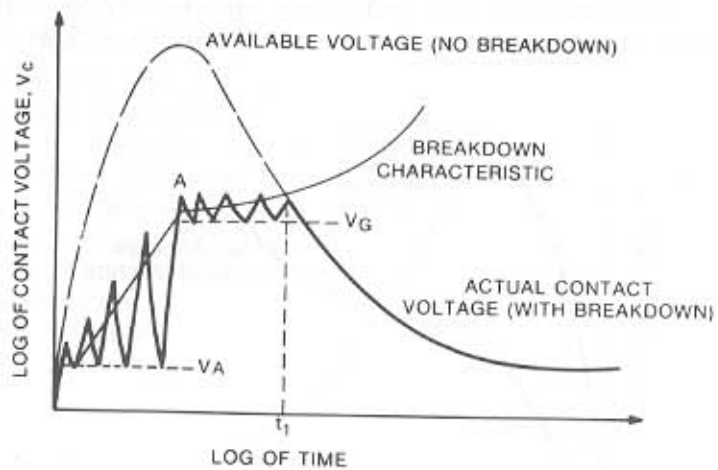

Figure 7-12. *Actual contact voltage for circuit in Fig. 7-9.*

*If sufficient current is now available, the glow discharge may transfer to an arc, and the voltage will fall to V_A instead of V_G. Sufficient current, however, is usually not available at the low voltage V_A to maintain the arc, so it is extinguished at this point.

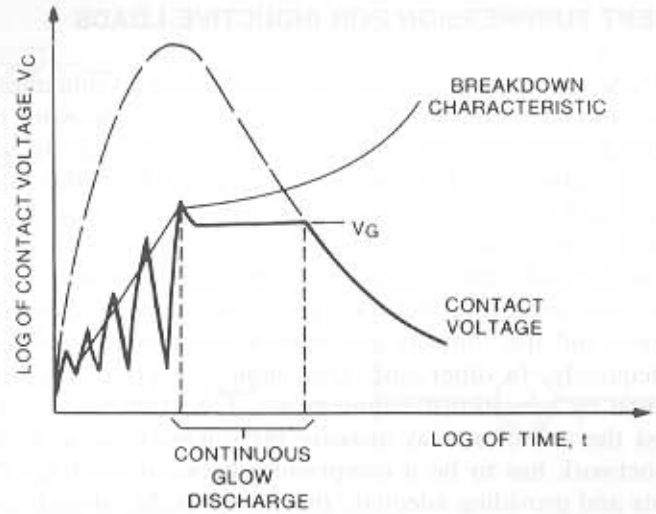

Figure 7-13. *Contact voltage for circuit in Fig. 7-9 when current is sufficient to maintain a continuous glow discharge.*

The electrical oscillations that occur in the resonant circuit of Fig. 7-9, when the switch is opened, can become the source of high-frequency interference to nearby equipment. These oscillations can be avoided if sufficient resistance and capacitance are provided to guarantee that the circuit is overdamped. The required condition for nonoscillation is given in the section on contact protection networks for inductive loads on p. 221.

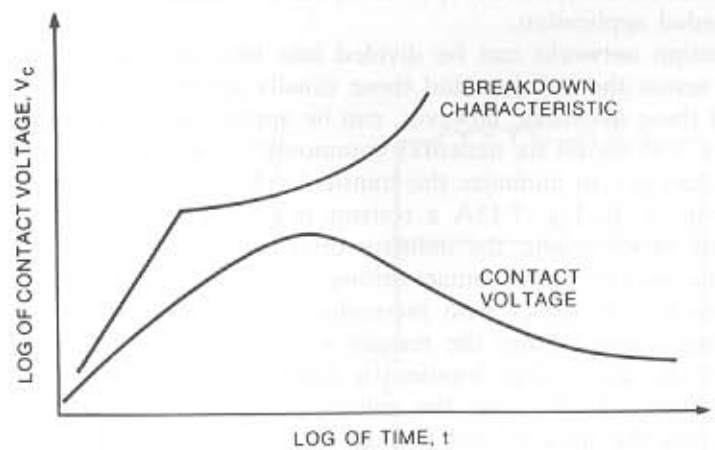

Figure 7-14. *Contact voltage for circuit in Fig. 7-9 when capacitance is large enough to prevent breakdown.*

TRANSIENT SUPPRESSION FOR INDUCTIVE LOADS

To protect contacts that control inductive loads, and to minimize radiated and conducted noise, some type of contact protection network must normally be placed across the inductance, the contacts, or both. In some cases the protection network can be connected across either the load or the contact with equal effectiveness. In large systems a load may be controlled by more than one contact, and it may be more economic to provide protection at the load rather than at each individual contact.

In severe cases protection networks may have to be applied across both the inductance and the contacts to eliminate interference and protect the contacts adequately. In other cases the amount of protection that can be used is limited by operational requirements. For example, protection networks across the coil of a relay increase the release time. In this case the protection network has to be a compromise between meeting operational requirements and providing adequate protection to the contacts controlling the relay.

From a noise reduction point of view it is usually preferable to provide as much transient suppression as possible across the noise source—in this case, the inductor. In most cases this provides sufficient protection for the contacts. When it does not, additional protection can be used across the contacts.

Precise calculations for the component values of a contact protection network are difficult. It involves parameters, the values of which are normally unknown by the circuit designer, such as the inductance and capacitance of the interconnecting wiring and the contact separation velocity. The simplifed design equations that follow are a starting point, and in many cases provide an acceptable contact protection network. Empirical tests should be used, however, to verify the effectiveness of the network in the intended application.

Protection networks can be divided into two categories: those usually applied across the inductor and those usually applied across the contacts. Some of these networks, however, can be applied in either place.

Figure 7-15 shows six networks commonly placed across a relay coil or other inductance to minimize the transient voltage generated when current is interrupted. In Fig. 7-15A a resistor is connected across the inductor. When the switch opens, the inductor drives whatever current was flowing before the opening of the contact through the resistor. The transient voltage peak therefore increases with increasing resistance but is limited to the steady-state current times the resistance. If R is made equal to the load resistance R_L, the voltage transient is limited to a magnitude equal to the supply voltage. In this case the voltage across the contact is the supply voltage plus the induced coil voltage, or twice the supply voltage. This circuit is very wasteful of power since the resistor draws current whenever the load is energized. If R should equal the load resistance, the resistor dissipates as much steady-state power as the load.

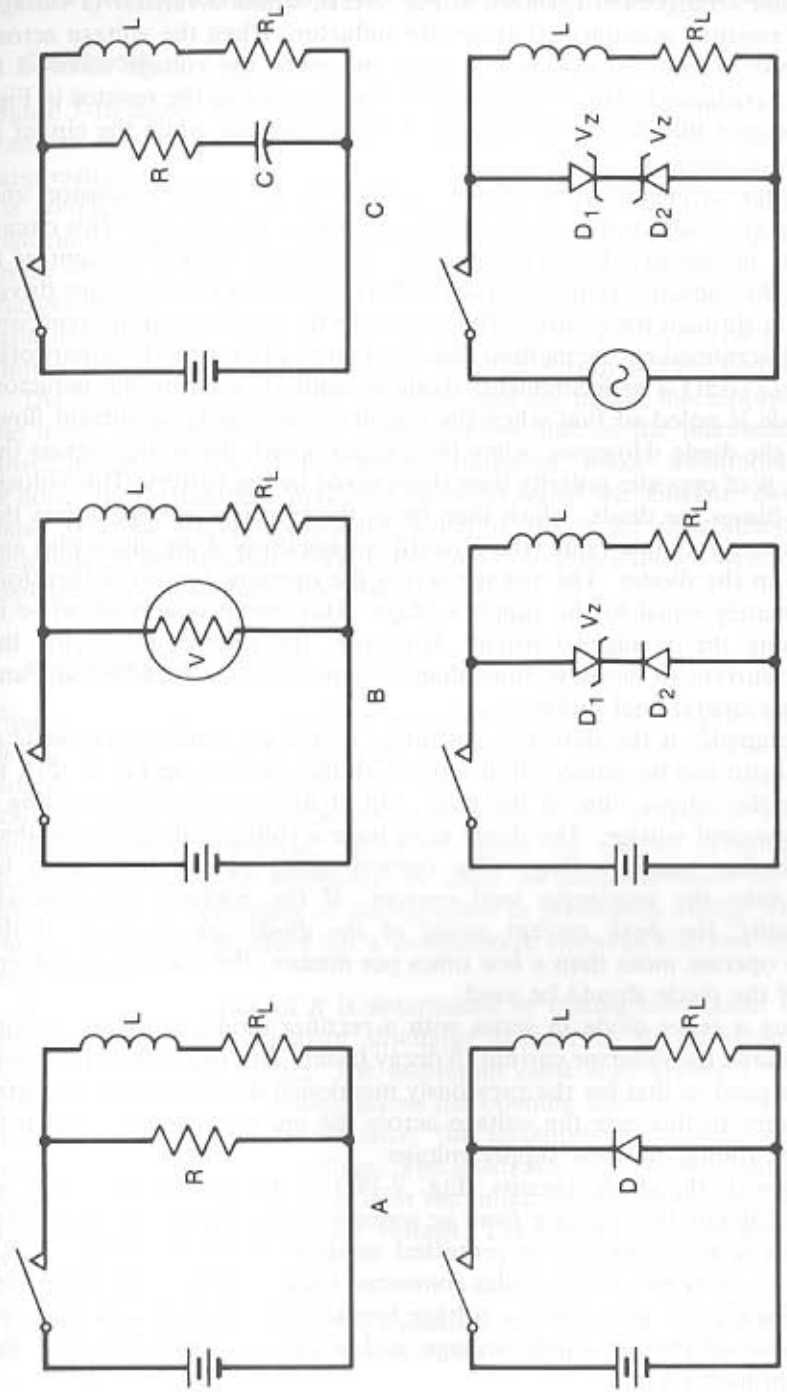

Figure 7-15. *Networks used across load to minimize "inductive kick" produced by an inductor when the current is interrupted.*

Another arrangement is shown in Fig. 7-15B, where a varistor (a voltage variable resistor) is connected across the inductor. When the voltage across the varistor is low, its resistance is high, but when the voltage across it is high, its resistance is low. This device works the same as the resistor in Fig. 7-15A, except that the power dissipated by the varistor while the circuit is energized is reduced.

A better arrangement is shown in Fig. 7-15C. Here a resistor and capacitor are connected in series and placed across the inductor. This circuit dissipates no power when the inductor is energized. When the contact is opened, the capacitor initially acts as a short circuit, and the inductor drives its current through the resistor. The values for the resistor and the capacitor can be determined by the method described on p. 219 for the R–C network.

In Fig. 7-15D a semiconductor diode is connected across the inductor. The diode is poled so that when the circuit is energized, no current flows through the diode. However, when the contact opens, the voltage across the inductor is of opposite polarity than that caused by the battery. This voltage forward-biases the diode, which then limits the transient voltage across the inductor to a very low value (the forward voltage drop of the diode plus any IR drop in the diode). The voltage across the opening contact is therefore approximately equal to the supply voltage. This circuit is very effective in suppressing the voltage transient. However, the time required for the inductor current to decay is more than for any of the previous circuits and may cause operational problems.

For example, if the inductor is a relay, its release time is increased. A small resistor can be connected in series with the diode, as in Fig. 7-15D, to decrease the release time of the relay, but at the expense of generating a higher transient voltage. The diode must have a voltage rating greater than the maximum supply voltage. The current rating of the diode must be greater than the maximum load current. If the contacts only operate occasionally, the peak current rating of the diode can be used. If the contacts operate more than a few times per minute, the continuous current rating of the diode should be used.

Adding a zener diode in series with a rectifier diode, as shown in Fig. 7-15E, allows the inductor current to decay faster. This protection, however, is not as good as that for the previously mentioned diode and uses an extra component. In this case the voltage across the opening contact is equal to the zener voltage plus the supply voltage.

Neither of the diode circuits (Fig. 7-15D or E) can be used with ac circuits. Circuits that operate from ac sources or circuits that must operate from two dc polarities can be protected using the networks in Fig. 7-15A through C, or by two zener diodes connected back to back, as shown in Fig. 7-15F. Each zener must have a voltage breakdown rating greater than the peak value of the ac supply voltage and a current rating equal to the maximum load current.

CONTACT PROTECTION NETWORKS FOR INDUCTIVE LOADS

C Network

Figure 7-16 shows three contact protection networks commonly used across contacts that control inductive loads. One of the simplest methods of suppressing arcs due to interrupting dc current is to place a capacitor across the contact, as shown in Fig. 7-16A. If the capacitor is large enough, the load current is momentarily diverted through it as the contact is opened, and arcing does not occur. However, when the contact is open the capacitor charges up to the supply voltage V_{dc}. When the contact is then closed, the capacitor discharges through the contact with the initial discharge current limited only by the parasitic resistance of the wiring and the contacts.

The larger the value of the capacitor and the higher the supply voltage, the more damage the arc on "make" does, due to the increased energy stored in the capacitor. If the contacts bounce on "make" additional damage is done due to multiple making and breaking of the current. Because of these reasons, using a capacitor alone across a set of contacts is not generally recommended. If used, the value of capacitance is determined as explained in the following section.

R–*C* Network

Figure 7-16B shows a circuit that overcomes the disadvantage of the circuit in Fig. 7-16A by limiting the capacitor discharge current when the contact is closed. This is done by placing a resistor, R, in series with the capacitor. For contact closing, it is desirable to have the resistance as large as possible to limit the discharge current. However, when the contact is opened, it is desirable to have the resistance as small as possible, since the resistor decreases the effectiveness of the capacitor in preventing arcing. The actual value of R must therefore be a compromise between the two conflicting requirements.

The minimum value of R is determined by closing conditions. It can be set by limiting the capacitor discharge current to the minimum arcing current I_A* for the contact. The maximum value is determined by opening conditions. The initial voltage across the opening contact is equal to I_0R. If R is equal to the load resistance, the instantaneous voltage across the contact equals the supply voltage. The maximum value of R is usually taken equal to the load resistance to limit the initial voltage developed across the opening contacts to the supply voltage. The limits on R can therefore be stated as

*Limiting the discharge current to $0.1I_A$ is preferable. However, since the value of the resistor R is a compromise between two conflicting requirements, this usually cannot be done in the case of the R–C network.

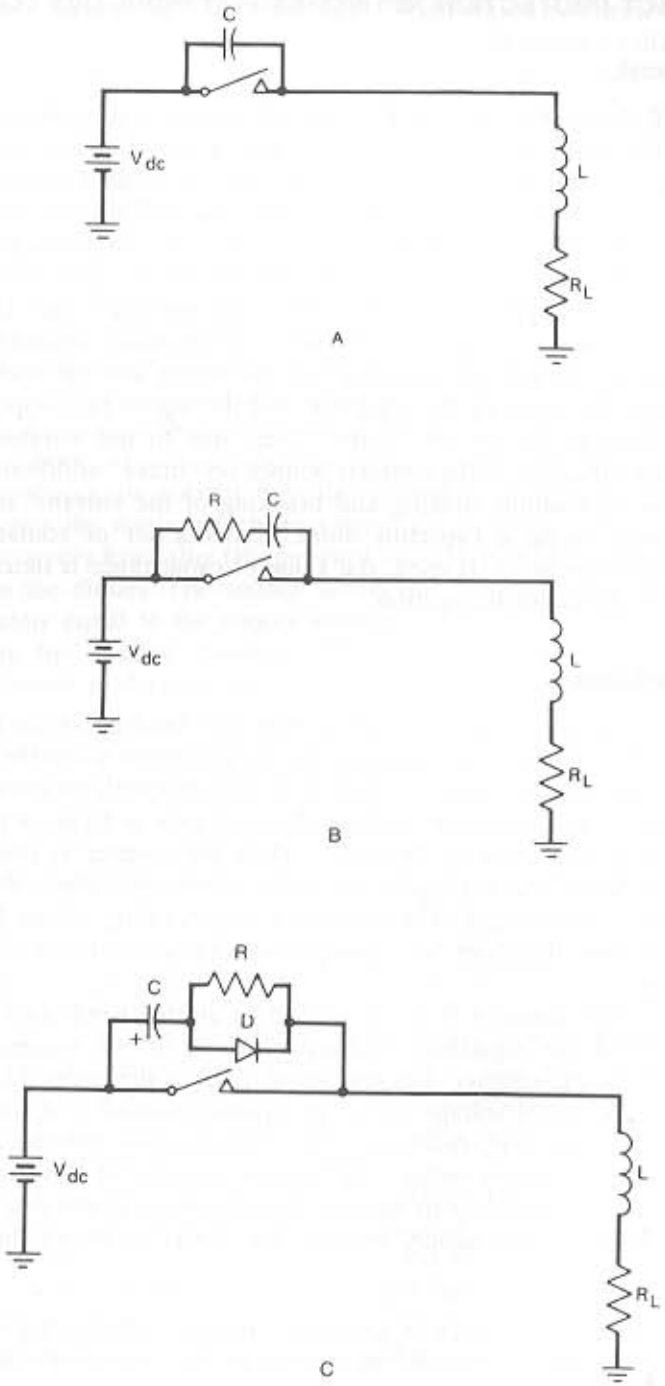

Figure 7-16. *Contact protection networks used across switch contacts.*

$$\frac{V_{dc}}{I_o} < R < R_L , \tag{7-2}$$

where R_L is equal to the load resistance.

The value of C is chosen to meet two requirements: (1) the peak voltage across the contacts should not exceed 300 V (to avoid a glow discharge), and (2) the initial rate of rise of contact voltage should not exceed 1 V per μs (to avoid an arc discharge). The latter requirement is satisfied if C is at least 1 μF/A of load current.

The peak voltage across the capacitor is usually calculated by neglecting the circuit resistance and assuming all the energy stored in the inductive load is transferred to the capacitor. Under these conditions

$$V_{C(\text{peak})} = I_0\sqrt{\frac{L}{C}} , \tag{7-3}$$

where I_0 is the current through the load inductance when the contact is opened. The value of the capacitor C should always be chosen so that V_C (peak) does not exceed 300 V. Therefore

$$C \geq \left(\frac{I_0}{300}\right)^2 L . \tag{7-4}$$

In addition, to limit the initial rate of rise of contact voltage to 1 V/μs,

$$C \geq I_0 \times 10^{-6} \tag{7-5}$$

In some cases it is preferable that the resonant circuit formed by the inductor and capacitor be nonoscillating (overdamped). The condition for nonoscillation is

$$C \geq \frac{4L}{R_1^2} , \tag{7-6}$$

where R_1 is the total resistance in series with the L–C circuit. In the case of Fig. 7-16B this would be $R_1 = R_L + R$. The requirement for nonoscillation, however, is not usually adhered to since it requires a large value capacitor.

The R–C protection network is the most widely used because of its low cost and small size. In addition it only has a small effect on the release time of the load. The R–C network is not, however, 100% effective. The presence of the resistor causes an instantaneous voltage (equal to I_0R) to develop across the opening contact, and therefore some early arcing is present. Figure 7-17 shows the voltage developed across the contact, with a properly designed R–C network, superimposed on the contact breakdown characteristic. This figure shows the early arcing due to the instantaneous voltage increase across the contact.

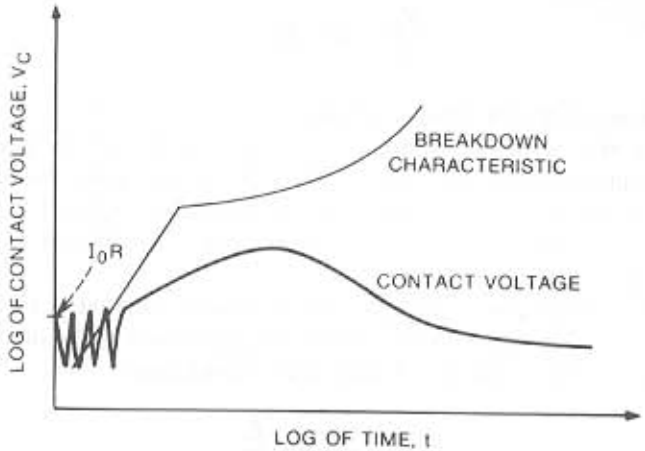

Figure 7-17. *Voltage across opening contact with R–C protection network.*

R–C–D Network

Figure 7-16C shows a more expensive circuit that overcomes the disadvantages of the circuits in Fig. 7-16A and B. When the contact is open, capacitor C charges up to the supply voltage with the polarity shown in the figure. When the contact closes, the capacitor discharges through resistor R, which limits the current. When the contact opens, however, diode D shorts out the resistor, thus allowing the load current to momentarily flow through the capacitor while the contact opens. The diode must have a breakdown voltage greater than the supply voltage with an adequate surge current rating (greater than the maximum load current). The capacitor value is chosen the same as for the R–C network. Since the diode shorts out the resistor when the contacts open, a compromise resistance value is no longer required. The resistance can now be chosen to limit the current on closure to less than one-tenth the arcing current,

$$R \geq \frac{10V_{dc}}{I_A}. \tag{7-7}$$

The R–C–D network provides optimum contact protection, but it is more expensive than other methods and cannot be used in an ac circuit.

INDUCTIVE LOADS CONTROLLED BY A TRANSISTOR SWITCH

If an inductive load is controlled by a transistor switch, care must be taken to guarantee that the transient voltage generated by the inductor when the current is interrupted does not exceed the breakdown voltage of the transistor. One of the most effective, and common, ways to do this is to

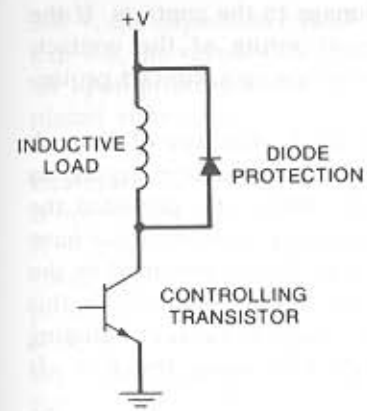

Figure 7-18. *Diode used to protect transistor-controlling inductive loads.*

place a diode across the inductor, as shown in Fig. 7-18. In this circuit the diode clamps the transistor collector to $+V$ when the transistor interrupts the current through the inductor, thereby limiting the voltage across the transistor to $+V$. Any of the networks of Fig. 7-15 may also be used. A zener diode connected across the transistor is another common method. In any case the network should be designed to limit the voltage across the transistor to less than its breakdown voltage rating.

Very large transient currents flow through the path between the inductive load and the protection diode. Therefore this loop area should be minimized to limit the radiation that occurs due to the transient current. The diode should be located as close as possible to the inductive load. This consideration is especially important when the protection diode is contained in a relay driver *IC*; otherwise, a large loop will occur.

RESISTIVE LOAD CONTACT PROTECTION

In the case of resistive loads operating with a source voltage of less than 300 V, a glow discharge cannot be started and therefore is of no concern. If the supply voltage is greater than the minimum arcing voltage V_A (about 12 V), an arc discharge occurs when the contacts are either opened or closed. Whether the arc, once started, sustains itself, depends on the magnitude of the load current.

If the load current is below the minimum arcing current I_A, the arc is quickly extinguished after initially forming. In this case only a minimal amount of contact damage occurs, and in general, no contact protection networks are needed. Due to parasitic circuit capacitance or contact bounce, the arc starts, stops, and reignites many times. This type of arcing may be the source of high-frequency radiation and may require some protection to control interference.

If the load current is greater than the minimum arcing current I_A a steady

arc forms. This steady arc does considerable damage to the contacts. If the current is less than the resistive circuit current rating of the contact, however, and the rated number of operations is satisfactory, contact protection may not be required.

If contact protection is required for a resistive load, what type of network should be used? In a resistive circuit the maximum voltage across an opening or closing contact is the supply voltage. Therefore, provided the supply voltage is under 300 V, the contact protection network does not have to provide high voltage protection. This function is already provided by the circuit. The required function of the contact protection network, in this case, is to limit the initial rate of rise of contact voltage to prevent initiating an arc discharge. This can best be accomplished by using the R–C–D network in Fig. 7-16C across the contact.

CONTACT PROTECTION SELECTION GUIDE

The following guide can be used to determine the type of contact protection for various loads:

1. *Noninductive loads drawing less than the arcing current*, in general, require no contact protection.
2. *Inductive loads drawing less than the arcing current* should have an R–C network or a diode for protection.
3. *Inductive loads drawing greater than the arcing current* should have an R–C–D network or a diode for protection.
4. *Noninductive loads drawing greater than the arcing current* should use the R–C–D network. Equation 7-4 does not have to be satisfied in this case provided the supply voltage is less than 300 V.

EXAMPLES

Proper selection of contact protection may be better understood with some numerical examples.

Example 7-1. A 150 Ω, 0.2 H relay coil is operated from a 12-V dc power source through a silver switch contact. The problem is to design a contact protection network for use across the relay.

The steady-state load current is 80 mA, which is less than the arcing current for silver contacts; therefore an R–C network or diode is appropriate. To keep the voltage gradient across the contact below 1 V/μs, the capacitance of the protection network must be greater than 0.08 μF (from Eq. 7-5). To keep the maximum voltage across the opening contact below

300 V, the capacitance must be greater than 0.014 μF (from Eq. 7-4). From Eq. 7-2, the value of the resistor should be between 30 and 150 Ω. Therefore an appropriate contact protection network is 0.1 μF in series with 100 Ω placed either across the contact or load.

Example 7-2. A magnetic brake having 1 H inductance and 53 Ω resistance is operated from a 48-V dc source through a switch with silver contacts. If an R–C contact protection network is used, the resistor should have a value (from Eq. 7-2) of $120 < R < 53$. Since this is impossible, a more complicated protection network must be used, such as the R–C–D network. For the R–C–D network, the resistor should have a value greater than 1200 Ω (from Eq. 7-7). The steady-state dc current in the brake is 0.9 A. Therefore, from Eq. 7-5, the capacitor must be greater than 0.9 μF to limit the voltage gradient across the contacts on opening. From Eq. 7-4, the capacitor must also be greater than 9 μF. A 10-μF capacitor with a 300-V rating could be used, with a 1500 Ω resistor and a diode, as shown in Fig. 7-19.

The 10-μF, 300-V capacitor must of necessity be relatively large physically. To avoid using such a large capacitor, the following alternate solution could be used. If a series combination of a 60-V zener diode and a rectifier diode is placed across the load, the maximum transient voltage across the load would be limited to 60 V. The maximum voltage across the contact upon opening would then be the zener voltage plus the supply voltage, or 108 V. Therefore the capacitor in the protection network does not have to be chosen to limit the maximum voltage across the contacts to 300 V, since this voltage is already limited by the diode to 108 V. The only requirement now on the capacitor is that it satisfy Eq. 7-5. Therefore a 1-μF, 150-V capacitor can be used as shown in Fig. 7-20, which avoids the need for a physically large size, 10-μF, 300-V capacitor.

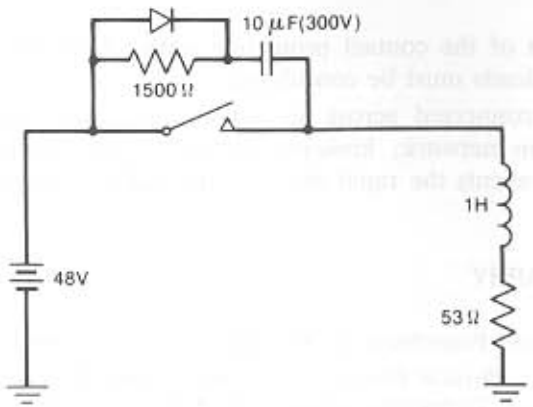

Figure 7-19. *Contact protection network for Example 7-2.*

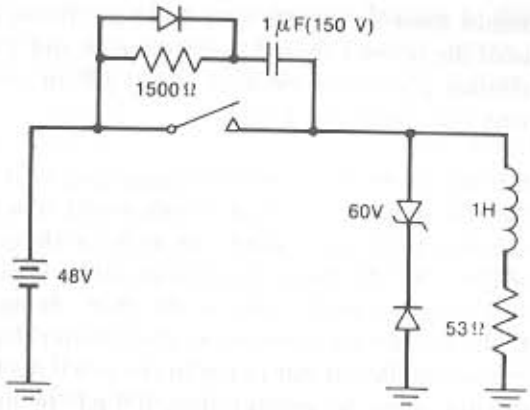

Figure 7-20. *Alternate contact protection network for Example 7-2. This circuit allows the use of a physically smaller capacitor.*

SUMMARY

- Two types of breakdown are important in switching contact: the glow, or gas, discharge, and the arc, or metal-vapor, discharge.
- To prevent a glow discharge, keep contact voltage below 300 V.
- To prevent an arc discharge, keep the initial rate of rise of contact voltage to less than 1 V/μs.
- Lamps and capacitor loads cause contact damage on closure due to the high inrush currents.
- Inductive loads are most damaging due to the high voltages they generate when current is interrupted.
- The R–C network is the most widely used protection network.
- The R–C–D network or the diode are the most effective protection network.
- The effect of the contact protection network on the release time of inductive loads must be considered.
- A diode connected across an inductor is a very effective transient suppression network; however, it may cause operational problems since it prevents the rapid decay of the inductor current.

BIBLIOGRAPHY

Auger, R. W., and Puerschner, K. *The Relay Guide*. Reinhold, New York, 1960.

Bell Laboratories. *Physical Design of Electronic Systems*. Vol. 3: Integrated Device and Connection Technology, Chapter 9 (Performance Principles of Switching Contacts). Prentice-Hall, Englewood Cliffs, N.J., 1971.

Dewey, R. "Everyone Knows That Inductive Loads Can Greatly Shorten Contact Life." *EDN*, April 5, 1973.

Duell, J. P. Jr. "Get Better Price/Performance from Electrical Contacts." *EDN*, June 5, 1973.

Holm, R. *Electrical Contacts*. 4th ed. Springer-Verlag, Berlin, 1967.

Howell, K. E. "How Switches Produce Electrical Noise." *IEEE Transactions on Electromagnetic Compatibility*, vol. EMC-21, No. 3, August, 1979.

National Association of Relay Manufacturers. *Engineers' Relay Handbook*. 2nd ed. Hayden Book Co., New York, 1969.

Oliver, F. J. *Practical Relay Circuits*. Hayden Book Co., New York, 1971.

Penning, F. M. *Electrical Discharge in Gases*. Phillips Technical Library, 1957.

8 INTRINSIC NOISE SOURCES

Even if all external noise coupling could be eliminated from a circuit, a theoretical minimum noise level would still exist due to certain intrinsic or internal noise sources. Although the rms value of these noise sources can be well defined, the instantaneous amplitude can only be predicted in terms of probability. Intrinsic noise is present in almost all electronic components.

This chapter covers the three most important intrinsic noise sources: thermal noise, shot noise, and contact noise. In addition popcorn noise and methods of measuring random noise are discussed.

THERMAL NOISE

Thermal noise comes from thermal agitation of electrons within a resistance, and it sets a lower limit on the noise present in a circuit. Thermal noise is also referred to as resistance noise or "Johnson noise" (for J. B. Johnson, its discoverer). Johnson (1928) found that a nonperiodic voltage exists in all conductors and its magnitude is related to temperature. Nyquist (1928) subsequently described the noise voltage mathematically, using thermodynamic reasoning. He showed that the open-circuit rms noise voltage produced by a resistance is

$$V_t = \sqrt{4kTBR}\,, \tag{8-1}$$

where

K = Boltzmann's constant (1.38×10^{-23} joules/°K),

T = absolute temperature (°K),

B = noise bandwidth (Hz),

R = resistance (Ω).

At room temperature (290°K), $4kT$ equals 1.6×10^{-20} W/Hz. The bandwidth B in Eq. 8-1 is the equivalent noise bandwidth of the system being considered. The calculation of equivalent noise bandwidth is covered on p. 234.

Thermal noise is present in all elements containing resistance. A plot of the thermal noise voltage at a temperature of 17°C (290°K) is shown in Fig.

8-1. Normal temperature variations have a small effect on the value of the thermal noise voltage. For example, at 117°C the noise voltage is only 16% greater than that given in Fig. 8-1 for 17°C.

Equation 8-1 shows that the thermal noise voltage is proportional to the square root of the bandwidth and the square root of resistance. It would therefore be advantageous to minimize the resistance and bandwidth of a system to reduce the thermal noise voltage. If thermal noise is still a problem, considerable reduction is possible by operating the circuit at extremely low temperatures (close to absolute zero), or by using a parametric amplifier. Since the gain of a parametric amplifier comes from a reactance varied at a rapid rate, it does not have thermal noise.

The thermal noise in a resistor can be represented by adding a thermal noise voltage source V_t in series with the resistor, as shown in Fig. 8-2. The magnitude of V_t is determined from Eq. 8-1. In some cases it is preferable to represent the thermal noise by an equivalent rms noise current generator of magnitude

$$I_t = \sqrt{\frac{4kTB}{R}} \tag{8-2}$$

in parallel with the resistor. This is also shown in Fig. 8-2.

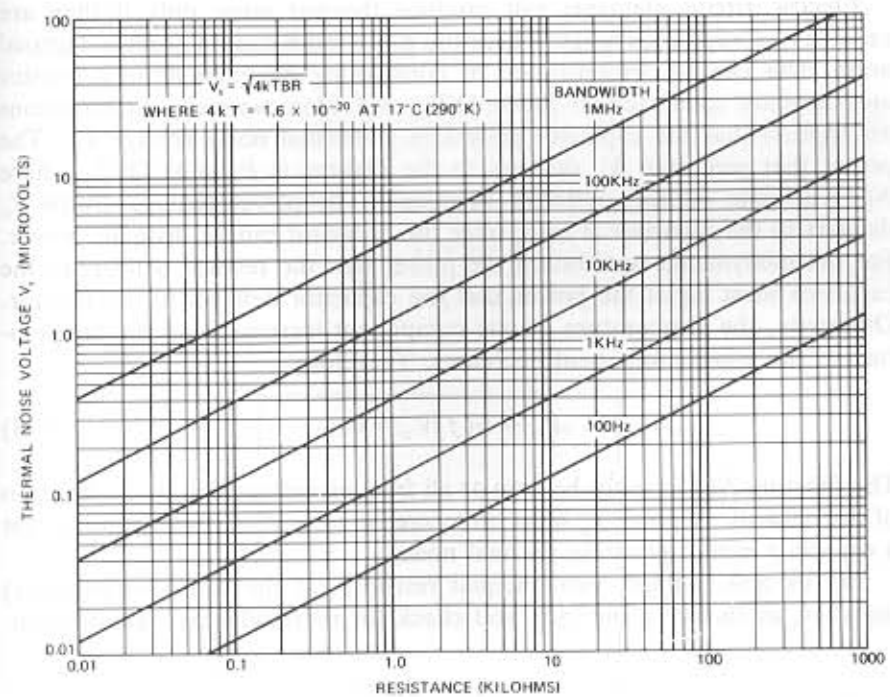

Figure 8-1. *Thermal noise voltage as a function of resistance and bandwidth.*

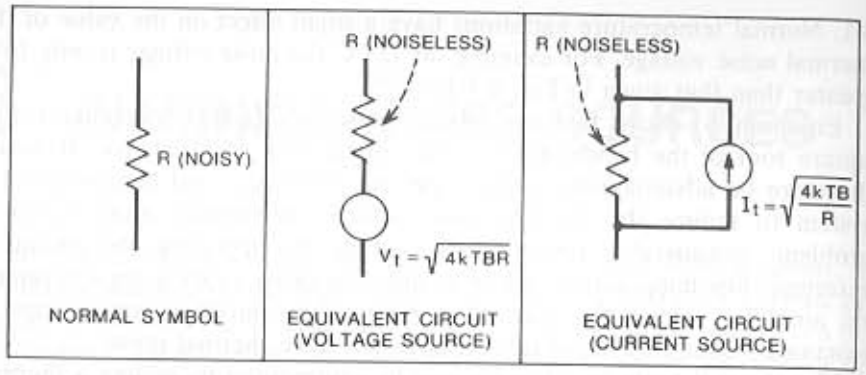

Figure 8-2. *Thermal noise in a resistor can be represented in an equivalent circuit as a voltage source (center) or a current source (right).*

Thermal noise is a universal function, independent of the composition of the resistance. For example, a 1000-Ω carbon resistor has the same amount of thermal noise as a 1000-Ω tantalum thin-film resistor. An actual resistor may have more noise than that due to thermal noise, but never less. This additional, or excess, noise is due to the presence of other noise sources. A discussion of noise in actual resistors was given in Chapter 5.

Electric circuit elements can produce thermal noise only if they are capable of dissipating energy. Therefore a reactance cannot produce thermal noise. This can be demonstrated by considering the example of a resistor and capacitor connected, as shown in Fig. 8-3. Here we make the erroneous assumption that the capacitor generates a thermal noise voltage V_{tc}. The power that generator V_{tc} delivers to the resistor is $P_{cr} = N(f)V_{tc}^2$, where $N(f)$ is some nonzero network function.* The power that generator V_{tr} delivers to the capacitor is zero, since the capacitor cannot dissipate power. For thermodynamic equilibrium the power that the resistor delivers to the capacitor must equal the power that the capacitor delivers to the resistor. Otherwise, the temperature of one component increases and the temperature of the other component decreases. Therefore

$$P_{cr} = N(f)V_{tc}^2 = 0\,. \tag{8-3}$$

The function $N(f)$ cannot be zero at all frequencies because it is a function of the network. Voltage V_{tc} must therefore be zero, thus demonstrating that a capacitor cannot generate thermal noise.

Let us now connect two unequal resistors (at the same temperature) together, as shown in Fig. 8-4, and check for thermodynamic equilibrium.

*In this example $N(f) = [j\omega/(j\omega + 1/RC)]^2/R$.

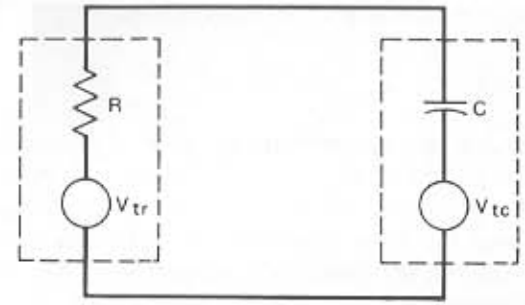

Figure 8-3. *An R–C circuit can only be in thermodynamic equilibrium if V_{tc} equals zero.*

The power that generator V_{t1} delivers to resistor R_2 is

$$P_{12} = \frac{R_2}{(R_1 + R_2)^2} V_{t1}^2\,. \tag{8-4}$$

Substituting Eq. 8-1 for V_{t1} gives

$$P_{12} = \frac{4kTBR_1R_2}{(R_1 + R_2)^2}\,. \tag{8-5}$$

The power that generator V_{t2} delivers to R_1 is

$$P_{21} = \frac{R_1}{(R_1 + R_2)^2} V_{t2}^2\,. \tag{8-6}$$

Substituting Eq. 8-1 for V_{t2} gives

$$P_{21} = \frac{4kTBR_1R_2}{(R_1 + R_2)^2}\,. \tag{8-7}$$

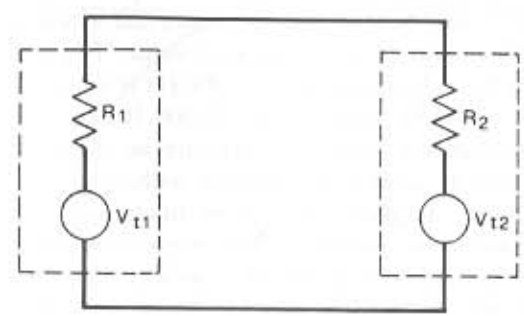

Figure 8-4. *Two resistors connected in parallel are in thermodynamic equilibrium.*

Comparing Eq. 8-5 to Eq. 8-7, we conclude that

$$P_{12} = P_{21} , \tag{8-8}$$

thus showing that the two resistors are in thermodynamic equilibrium.

The power that generator V_{t1} delivers to resistor R_1 does not have to be considered in the preceding calculation. This power comes from and is dissipated in resistor R_1. Thus it produces no net effect on the temperature of resistor R_1. Similarly, the power that generator V_{t2} delivers to resistor R_2 need not be considered.

Let us now consider the case when the two resistors in Fig. 8-4 are equal in value, and maximum power transfer occurs between the resistors. We can then write

$$P_{12} = P_{21} = P_n = \frac{V_t^2}{4R} . \tag{8-9}$$

Substituting Eq. 8-1 for V_t gives

$$P_n = kTB \text{ watts} . \tag{8-10}$$

The quantity kTB is referred to as the "available noise power." At room temperature (17°C) this noise power per hertz of bandwidth is 4×10^{-21} W, and it is independent of the value of the resistance.

It can be shown (van der Ziel, 1954, p. 17) that the thermal noise generated by any arbitrary connection of passive elements is equal to the thermal noise that would be generated by a resistance equal to the real part of the equivalent network impedance. This fact is useful for calculating the thermal noise of a complex passive network.

CHARACTERISTICS OF THERMAL NOISE

The frequency distribution of thermal noise power is uniform. For a specified bandwidth anywhere in the spectrum, the available noise power is constant and independent of the resistance value. For example, the noise power in a 100-Hz band between 100 and 200 Hz is equal to the noise power in a 100-Hz band between 1,000,000 and 1,000,100 Hz. When viewed on a wideband oscilloscope, thermal noise appears as shown in Fig. 8-5. Such noise—with a uniform power distribution with respect to frequency—is called "white noise," implying that it is made up of many frequency components. Many noise sources other than thermal noise share this characteristic and are similarly referred to as white noise.

Although the rms value for thermal noise is well defined, the instantaneous value can only be defined in terms of probability. The in-

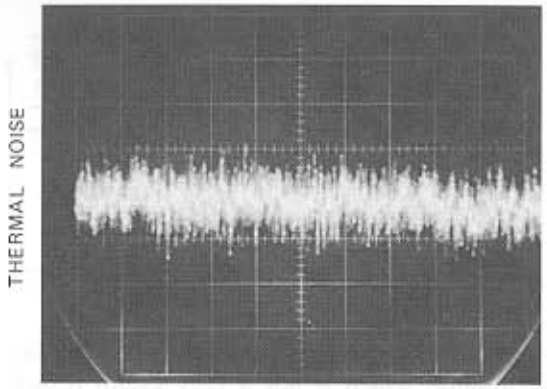

Figure 8-5. *Thermal noise as seen on a wideband oscilloscope (horizontal sweep 200 μs per division).*

stantaneous amplitude of thermal noise has a Gaussian, or normal, distribution. The average value is zero and the rms value is given by Eq. 8-1. Figure 8-6 shows the probability density function for thermal noise. The probability of obtaining an instantaneous voltage between any two values is equal to the integral of the probability density function between the two values. The probability density function is greatest at zero magnitude, indicating that values near zero are most common.

The crest factor of a waveform is defined as the ratio of the peak to the rms value. For thermal noise the probability density function, shown in Fig. 8-6, asymptotically approaches zero for both large positive and large negative amplitudes. Since the curve never reaches zero, there is no finite limit to

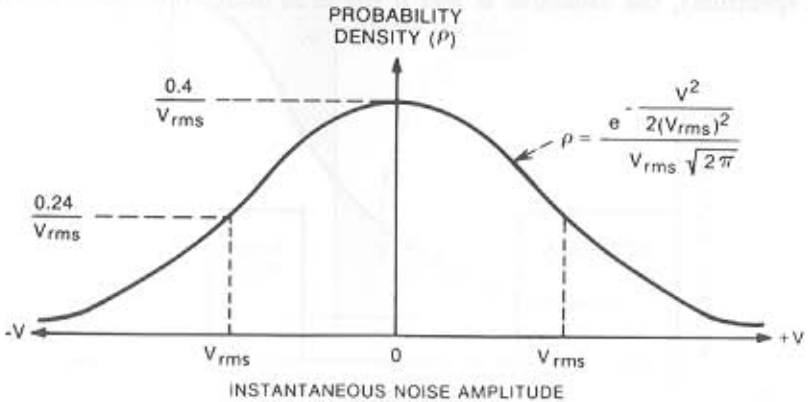

Figure 8-6. *Probability density function for thermal noise (Gaussian distribution).*

Table 8-1 Crest Factors for Thermal Noise

Percent of Time Peak Exceeded	Crest Factor (peak/rms)
1.0	2.6
0.1	3.3
0.01	3.9
0.001	4.4
0.0001	4.9

the magnitude of the instantaneous noise voltage. On this basis the crest factor would be infinite, which is not a very useful result. A more useful result is obtained if we calculate the crest factor for peaks that occur at least a specified percentage of the time. Table 8-1 shows the results. Normally, only peaks that occur at least 0.01% of the time are considered, and *a crest factor of approximately 4 is used for thermal noise.*

EQUIVALENT NOISE BANDWIDTH

The noise bandwidth B is the voltage-gain-squared bandwidth of the system or circuit being considered. The noise bandwidth is defined for a system with uniform gain throughout the passband and zero gain outside the passband. Figure 8-7 shows this ideal response for a low pass circuit and a bandpass circuit.

Practical circuits do not have these ideal characteristics but have responses similar to those shown in Fig. 8-8. The problem then is to find an equivalent noise bandwidth that can be used in equations to give the same results as the actual nonideal bandwidth does in practice. In the case of a white noise source (equal noise power for a specified bandwidth anywhere in the spectrum), the objective is met if the area under the equivalent noise

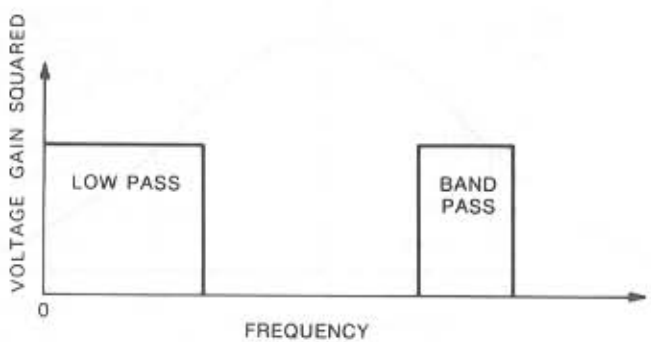

Figure 8-7. *Ideal bandwidth of low-pass and band-pass circuit elements.*

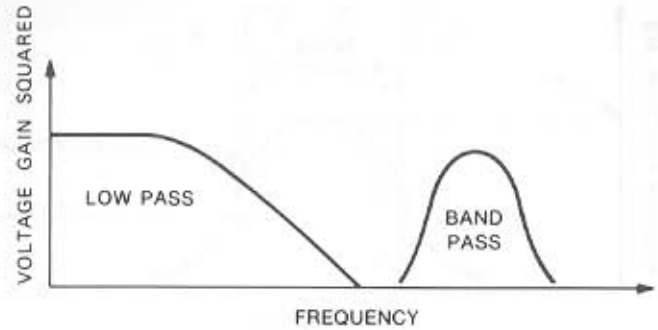

Figure 8-8. *Actual bandwidth of low-pass and band-pass circuit elements.*

bandwidth curve is made equal to the area under the actual curve. This is shown in Fig. 8-9 for a low pass circuit.

For any network transfer function, $A(f)$ (expressed as a voltage or current ratio), there is an equivalent noise bandwidth with constant magnitude of transmission A_0 and bandwidth of

$$B = \frac{1}{|A_0|^2} \int_0^\infty |A(f)|^2 \, df \, . \tag{8-11}$$

A typical bandpass function is shown in Fig. 8-10. A_0 is usually taken as the maximum absolute value of $A(f)$.

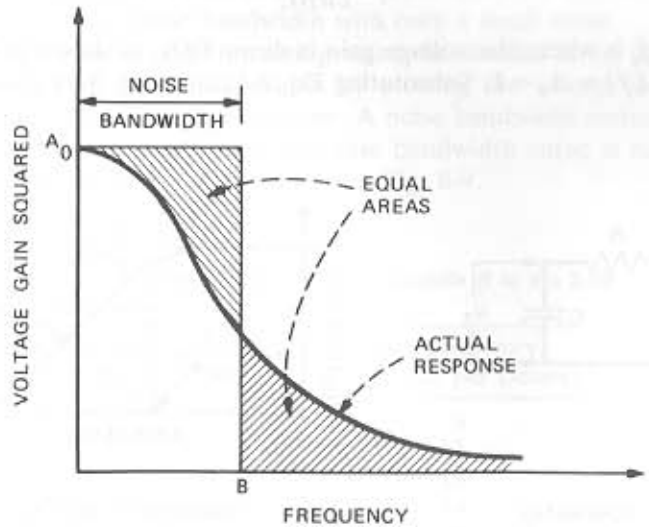

Figure 8-9. *Actual response and equivalent noise bandwidth for low-pass circuit. This curve is drawn with a linear scale.*

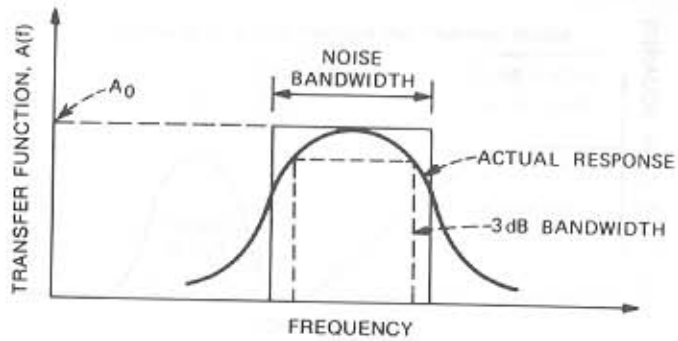

Figure 8-10. *Any network transfer function can be expressed as an equivalent bandwidth with constant transmission ratio.*

Example 8-1. Calculate the equivalent noise bandwidth for the simple R–C circuit of Fig. 8-11. The voltage gain of this single pole (time constant) circuit versus frequency is

$$A(f) = \frac{f_0}{jf + f_0}, \tag{8-12}$$

where

$$f_0 = \frac{1}{2\pi RC}. \tag{8-13}$$

Frequency f_0 is where the voltage gain is down 3 dB, as shown in Fig. 8-11. At $f = 0$, $A(f) = A_0 = 1$. Substituting Eq. 8-12 into Eq. 8-11 gives

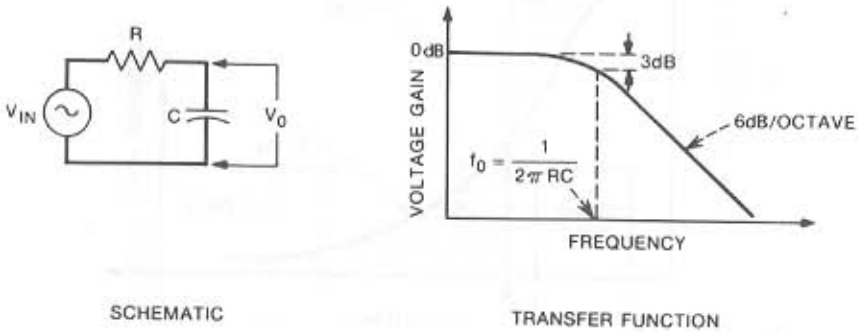

Figure 8-11. *R–C circuit.*

$$B = \int_0^\infty \left(\frac{f_0}{\sqrt{f_0^2 + f^2}}\right)^2 df, \tag{8-14a}$$

$$B = f_0^2 \int_0^\infty (f_0^2 + f^2)^{-1}\, df. \tag{8-14b}$$

This can be integrated by letting $f = f_0 \tan\theta$; therefore, $df = f_0 \sec^2\theta\, d\theta$. Making this substitution into Eq. 8-14b gives

$$B = f_0 \int_0^{\pi/2} d\theta. \tag{8-15}$$

Integrating gives

$$B = \frac{\pi}{2} f_0. \tag{8-16}$$

Therefore the equivalent noise bandwidth for this circuit is $\pi/2$ or 1.57 times the 3-dB voltage bandwidth f_0. This result can be applied to any circuit that can be represented as a single-pole, low-pass filter. This result is also applicable to certain active devices, such as transistors, which can be modeled as single-pole, low-pass circuits.

Table 8-2 gives the ratio of the noise bandwidth to the 3-dB bandwidth for circuits with various numbers of identical poles. As can be seen, when the number of poles increase, the noise bandwidth approaches the 3-dB bandwidth. In the case of three or more poles the 3-dB bandwidth can be used in place of the noise bandwidth with only a small error.

A second method of determining noise bandwidth is to perform the integration graphically. This is done by plotting the voltage-gain-squared versus frequency on linear graph paper. A noise bandwidth rectangle is then drawn such that the area under the noise bandwidth curve is equal to the area under the actual curve, as shown in Fig. 8-9.

Table 8-2 Ratio of the Noise Bandwidth B to the 3-dB Bandwidth f_0

Number of Poles	B/f_0	High-Frequency Rolloff (dB per Octave)
1	1.57	6
2	1.22	12
3	1.15	18
4	1.13	24
5	1.11	30

SHOT NOISE

Shot noise is associated with current flow across a potential barrier. It is due to the fluctuation of current around an average value resulting from the random emission of electrons (or holes). This noise is present in both vacuum tubes and semiconductors. In vacuum tubes, shot noise comes from the random emission of electrons from the cathode. In semiconductors, shot noise is due to random diffusion of carriers through the base of a transistor and the random generation and recombination of hole electron pairs.

The shot effect was analyzed theoretically by W. Schottky in 1918. He showed that the rms noise current was equal to (van der Ziel, 1954, p. 91)

$$I_{sh} = \sqrt{2qI_{dc}B}\,, \tag{8-17}$$

where

q = electron charge (1.6×10^{-19} coulombs),

I_{dc} = average dc current (A),

B = noise bandwidth (Hz).

Equation 8-17 is similar in form to Eq. 8-2. The power density for shot noise is constant with frequency and the amplitude has a Gaussian distribution. The noise is white noise and has the same characteristic as previously described for thermal noise. Dividing Eq. 8-17 by the square root of the bandwidth gives

$$\frac{I_{sh}}{\sqrt{B}} = \sqrt{2qI_{dc}} = 5.66 \times 10^{-10}\sqrt{I_{dc}}\,. \tag{8-18}$$

In Eq. 8-18 the noise current per square root of bandwidth is only a function of the dc current flowing through the device. Therefore, by measuring the dc current through the device, the amount of noise can be very accurately determined.

In making amplifier noise figure measurements (as discussed in Chapter 9), the availability of a variable source of white noise can considerably simplify the measurement. A diode can be used as a white noise source. If shot noise is the predominant noise source in the diode, the rms value of the noise current can be determined simply by measuring the dc current through the diode.

CONTACT NOISE

Contact noise is caused by fluctuating conductivity due to an imperfect contact between two materials. It occurs anywhere when two conductors are joined together, such as in switches and relay contacts. It also occurs in transistors and diodes, due to imperfect contacts, and in composition resistors and carbon microphones that are composed of many small particles molded together.

Contact noise is also called by many other names. When found in resistors, it is referred to as "excess noise." When observed in vacuum tubes, it is usually referred to as "flicker noise." Due to its unique frequency characteristic it is often called "$1/f$ noise," or "low-frequency noise."

Contact noise is directly proportional to the value of direct current. The power density varies as the reciprocal of frequency ($1/f$) and the magnitude is Gaussian. The noise current I_f per square root of bandwidth can be expressed approximately (van der Ziel, 1954, p. 209) as

$$\frac{I_f}{\sqrt{B}} \approx \frac{KI_{dc}}{\sqrt{f}}\,, \tag{8-19}$$

where

I_{dc} = average value of dc current (A),

f = frequency (Hz),

K = a constant that depends on the type of material and its geometry,

B = bandwidth in hertz centered about the frequency (f).

It should be noted that the magnitude of contact noise can become very large at low frequencies due to its $1/f$ characteristic. Most of the theories advanced to account for contact noise predict that at some low frequencies the amplitude becomes constant. However, measurements of contact noise at frequencies as low as a few cycles per day still show the $1/f$ characteristic. Due to its frequency characteristics, contact noise is usually the most important noise source in low-frequency circuits.

POPCORN NOISE

Popcorn noise, also called burst noise, was first discovered in semiconductor diodes and has recently reappeared in integrated circuits. If burst noise is amplified and fed into a loudspeaker, it sounds like corn popping, with thermal noise providing a background frying sound—thus the name popcorn noise.

Unlike the other noise sources discussed in this chapter, popcorn noise is due to a manufacturing defect, and it can be eliminated by improved manufacturing processes. This noise is caused by a defect in the junction, usually a metallic impurity, of a semiconductor device. Popcorn noise occurs in bursts and causes a discrete change in level, as shown in Fig. 8-12. The

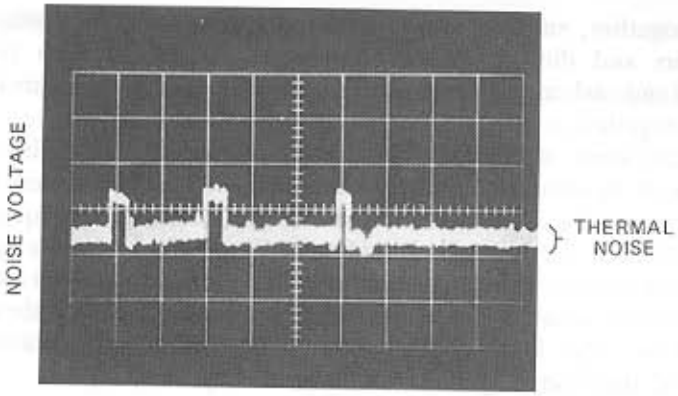

Figure 8-12. *Output waveform of an IC op-amp with popcorn noise. The random noise on the baseline and at the top of the burst is thermal noise.*

width of the noise bursts varies from microseconds to seconds. The repetition rate, which is not periodic, varies from several hundred pulses per second to less than one pulse per minute. For any particular sample of a device, however, the amplitude is fixed since it is a function of the characteristics of the junction defect. Typically, the amplitude is from 2–100 times the thermal noise.

The power density of popcorn noise has a $1/f^n$ characteristic, where n is typically two. Since the noise is a current-related phenomenon, popcorn noise voltage is greatest in a high-impedance circuit, for example, the input circuit of an operational amplifier.

ADDITION OF NOISE VOLTAGES

Noise voltages, or currents, produced independently with no relationships between each other are uncorrelated. When uncorrelated noise sources are added together, the total power is equal to the sum of the individual powers. Adding two noise voltage generators V_1 and V_2, together on a power basis, gives

$$V_{\text{total}}^2 = V_1^2 + V_2^2 . \tag{8-20}$$

The total noise voltage can then be written as

$$V_{\text{total}} = \sqrt{V_1^2 + V_2^2} . \tag{8-21}$$

Therefore uncorrelated noise voltages can be added by taking the square root of the sum of the squares of the individual noise voltages.

Two correlated noise voltages can be added by using

$$V_{\text{total}} = \sqrt{V_1^2 + V_2^2 + 2\gamma V_1 V_2} , \tag{8-22}$$

where γ is a correlation coefficient that can have any value from +1 to −1. When γ equals 0, the voltages are uncorrelated; when $|\gamma|$ equals 1, the voltages are totally correlated. For values of γ between 0 and +1 or 0 and −1 the voltages are partially correlated.

MEASURING RANDOM NOISE

Noise measurements are usually made at the output of a circuit or amplifier. This is done for two reasons: (1) the output noise is larger and therefore easier to read on the meter, and (2) it avoids the possibility of the noise meter upsetting the shielding, grounding, or balancing of the input circuit of the device being measured. If a value of equivalent input noise is required, the output noise is measured and divided by the circuit gain to obtain the equivalent input noise.

Since most meters were intended to measure sinusoidal voltages, their response to a random noise source must be investigated. Three general requirements for a noise meter are (1) it should respond to noise power, (2) it should have a crest factor of four or greater, and (3) its bandwidth should be at least ten times the noise bandwidth of the circuit being measured. We will now consider the response of various types of meters when used to measure white noise.

A true rms meter is obviously the best choice, provided its bandwidth and crest factor are sufficient. A crest factor of three provides less than 1.5% error, whereas a crest factor of four gives an error of less than 0.5% No correction to the meter indication is required.

The most common ac voltmeter responds to the average value of the waveform but has a scale calibrated to read rms. This meter uses a rectifier and a dc meter movement to respond to the average value of the waveform being measured. For a sine wave, the rms value is 1.11 times the average value. Therefore the meter scale is calibrated to read 1.11 times the measured value. For white noise, however, the rms value is 1.25 times the average value. Therefore, when used to measure white noise, an average-responding meter reads too low. If the bandwidth and crest factor are sufficient, such a meter may be used to measure white noise by multiplying the meter reading by 1.13 or by adding 1.1 dB. Measurements should be made on the lower half of the meter scale to avoid clipping the peaks of the noise waveform.

Peak-responding voltmeters should not be used to measure noise since their response depends on the charge and discharge time constants of the individual meter used.

Table 8-3 Characteristics of Meters Used to Measure White Noise

Type of Meter	Correction Factor	Remarks
True rms	None	Meter bandwidth greater than ten times noise bandwidth, and meter crest factor 3 or greater.
RMS calibrated average responding	Multiply reading by 1.13 or add 1.1 dB	Meter bandwidth greater than ten times noise bandwidth, and meter crest factor 3 or greater. Read below one-half scale to avoid clipping peaks.
RMS calibrated peak responding	Do not use	
Oscilloscope	RMS $\approx \frac{1}{8}$ peak-to-peak value	Waveshape can be observed to be sure it is random noise and not pickup. Ignore occasional, extreme peaks.

An oscilloscope is an often overlooked, but excellent, device for measuring white noise. One advantage it has over all other indicators is that the waveshape being measured can be seen. In this way you can be sure that you are measuring the desired random noise, not pickup or 60-Hz hum. The rms value of white noise is approximately equal to the peak-to-peak value taken from the oscilloscope, divided by eight.* When determining the peak-to-peak value on the oscilloscope, one or two peaks that are considerably greater than the rest of the waveform should be ignored. With a little experience, rms values can be accurately determined by this method. With an oscilloscope, random noise can be measured even when 60-Hz hum or other nonrandom noise sources are present, since the waveforms can be distinguished and measured separately on the display.

Table 8-3 summarizes the characteristics of various types of meters when used to measure white noise.

SUMMARY

- Thermal noise is present in all elements containing resistance.
- A reactance does not generate thermal noise.

*This assumes a crest factor of 4 for white noise.

- The thermal noise in any connection of passive elements is equal to the thermal noise that would be generated in a resistance equal to the real part of the equivalent network impedance.
- Shot noise is produced by current flow across a potential barrier.
- Contact noise ($1/f$ noise) is present whenever current flows through a nonhomogeneous material.
- Contact noise is only a problem at low frequencies.
- Popcorn noise can be eliminated by improved manufacturing processes.
- The noise bandwidth is greater than the 3-dB bandwidth.
- As the number of poles (time constants) increase, the noise bandwidth approaches the 3-dB bandwidth.
- The crest factor for thermal noise is normally assumed to be four.
- Uncorrelated noise voltages add on a power basis; therefore

$$V_{\text{total}} = \sqrt{V_1^2 + V_2^2 + \cdots V_m^2}.$$

BIBLIOGRAPHY

Baxandall, P. J. "Noise in Transistor Circuits, Part 1." *Wireless World*, vol. 74, November 1968.

Bennett, W. R. "Characteristics and Origins of Noise—Part I." *Electronics*, vol. 29, March 1956, pp. 154–160.

Campbell, R. H., Jr., and Chipman, R. A. "Noise from Current-Carrying Resistors 20 to 500 Kc." *Proceedings of I.R.E.*, vol. 37, August 1949, pp. 938–942.

Dummer, G. W. A. *Fixed Resistors*. Sir Isaac Pitman, London, 1956.

Johnson, J. B. "Thermal Agitation of Electricity in Conductors." *Physical Review*, vol. 32, July 1928, pp. 97–109.

Lathi, B. P. *Signals, Systems and Communications*. Chapter 13. Wiley, New York 1965.

Mumford, W. W., and Scheibe, E. H. *Noise Performance Factors in Communication Systems*. Horizon House, Dedham, Mass., 1969.

Nyquist, H. "Thermal Agitation of Electric Charge in Conductors." *Physical Review*, vol. 32, July 1928, pp. 110–113.

van der Ziel, A. *Fluctuation Phenomena in Semi-Conductors*. Academic, New York, 1959.

van der Ziel, A. *Noise*. Prentice-Hall, Englewood Cliffs, N.J., 1954.

9 ACTIVE DEVICE NOISE

Bipolar transistors, field effect transistors (FETs), and integrated circuit operational amplifiers (op-amps) have inherent noise generation mechanisms. This chapter discusses these internal noise sources and shows the conditions necessary to optimize noise performance.

Before covering active device noise, the general topics of how noise is specified and measured are presented. This general analysis provides a standard set of noise parameters that can then be used to analyze noise in various devices. The common methods of specifying device noise are (1) noise factor and (2) the use of a noise voltage and current model.

NOISE FACTOR

The concept of noise factor was developed in the 1940s as a method of evaluating noise in vacuum tubes. In spite of several serious limitations, the concept is still widely used today.

The noise factor (F) is a quantity that compares the noise performance of a device to that of an ideal (noiseless) device. It can be defined as

$$F = \frac{\text{Noise power output of actual device } (P_{no})}{\text{Noise power output of ideal device}} . \tag{9-1}$$

The noise power output of an ideal device is due to the thermal noise power of the source resistance. The standard temperature for measuring the source noise power is 290°K. Therefore the noise factor can be written as

$$F = \frac{\text{Noise power output of actual device } (P_{no})}{\text{Power output due to source noise}} . \tag{9-2}$$

An equivalent definition of noise factor is the input signal-to-noise ratio divided by the output signal-to-noise ratio

$$F = \frac{S_i/N_i}{S_o/N_o} . \tag{9-3}$$

These signal-to-noise ratios must be power ratios unless the input impedance is equal to the load impedance, in which case they can be voltage squared, current squared, or power ratios.

All noise factor measurements must be taken with a resistive source, as shown in Fig. 9-1. The open circuit input noise voltage is therefore just the thermal noise of the source resistance R_s, or

$$V_t = \sqrt{4kTBR_s} . \tag{9-4}$$

At 290°K, this is

$$V_t = \sqrt{1.6 \times 10^{-20} BR_s} . \tag{9-5}$$

If the device has a voltage gain A, defined as the ratio of the output voltage measured across R_L to the open circuit source voltage, then the component of output voltage due to the thermal noise in R_s is AV_t. Using V_{no} for the total output noise voltage measured across R_L, the noise factor can be written as

$$F = \frac{(V_{no})^2/R_L}{(AV_t)^2/R_L} , \tag{9-6}$$

or

$$F = \frac{(V_{no})^2}{(AV_t)^2} . \tag{9-7}$$

V_{no} includes the effects of both the source noise and the device noise. Substituting Eq. 9-4 into Eq. 9-7 gives

$$F = \frac{(V_{no})^2}{4kTBR_sA^2} . \tag{9-8}$$

The following three characteristics of noise factor can be seen by examining Eq. 9-8:

1. It is independent of load resistance R_L.
2. It does depend on source resistance R_s.
3. If a device were completely noiseless, the noise factor would equal one.

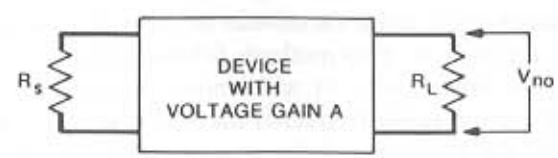

Figure 9-1. *Resistive source is used for noise factor measurements.*

Noise factor expressed in decibels is called noise figure (NF) and is equal to

$$NF = 10 \log F . \tag{9-9}$$

In a qualitative sense noise figure and noise factor are the same, and in casual conversation they are often interchanged.

Due to the bandwidth term in the denominator of Eq. 9-8, there are two ways to specify the noise factor: (1) a spot noise, measured at a specified frequency over a 1-Hz bandwidth, or (2) an integrated, or average noise, measured over a specified bandwidth. If the device noise is "white" and is generated prior to the bandwidth-limiting portion of the circuit both the spot and integrated noise factors are equal. This is because, as the bandwidth is increased, both the total noise and the source noise increase by the same factor.

The concept of noise factor has three major limitations:

1. Increasing the source resistance may decrease the noise factor while increasing the total noise in the circuit.
2. If a purely reactive source is used, noise factor is meaningless since the source noise is zero, making the noise factor infinite.
3. When the device noise is only a small percentage of the source thermal noise (as with some low noise FETs), the noise factor requires taking the ratio of two almost equal numbers. This can produce inaccurate results.

A direct comparison of two noise factors is only meaningful if both are measured at the same source resistance. Noise factor varies with the bias conditions, frequency, and temperature as well as source resistance, and all of these should be defined when specifying noise factor.

Knowing the noise factor for one value of source resistance does not allow the calculation of the noise factor at other values of resistance. This is because both the source noise and device noise vary as the source resistance is changed.

MEASUREMENT OF NOISE FACTOR

A better understanding of noise factor can be obtained by describing the methods used to measure it. Two methods follow: (1) the single-frequency method, and (2) the noise-diode, or white noise, method.

The test set up for the single-frequency method is shown in Fig. 9-2. V_s is an oscillator set to the frequency of the measurement, and R_s is the source resistance. With the source V_s turned off, the output rms noise voltage V_{no} is measured. This voltage consists of two parts: the first due to the thermal

Figure 9-2. *Single-frequency method for measuring noise factor.*

noise voltage V_t of the source resistor, and the second due to the noise in the device.

$$V_{no} = \sqrt{(AV_t)^2 + (\text{Device noise})^2} . \tag{9-10}$$

Next, the generator V_s is turned on, and an input signal is applied until the output power doubles (output rms voltage increases by 3 dB over that previously measured). Under these conditions the following equation is satisfied

$$(AV_s)^2 + (V_{no})^2 = 2V_{no}^2 ; \tag{9-11}$$

therefore

$$AV_s = V_{no} . \tag{9-12}$$

Substituting Eq. 9-12 into Eq. 9-7 gives

$$F = \left(\frac{V_s}{V_t}\right)^2 . \tag{9-13}$$

Substituting from Eq. 9-5 for V_t produces

$$F = \frac{V_s^2}{1.6 \times 10^{-20} BR_s} . \tag{9-14}$$

Since the noise factor is not a function of R_L, any value of load resistor can be used for the measurment.

The disadvantage of this method is that the noise bandwidth of the device* must be known.

A better method of measuring noise factor is to use a noise diode as a white noise source. The measuring circuit is shown in Fig. 9-3. I_{dc} is the direct current through the noise diode, and R_s is the source resistance. The shot noise in the diode is

$$I_{sh} = \sqrt{3.2 \times 10^{-19} I_{dc} B} . \tag{9-15}$$

*It should be remembered that the noise bandwidth is usually not equal to the 3-dB bandwidth (see Chapter 8).

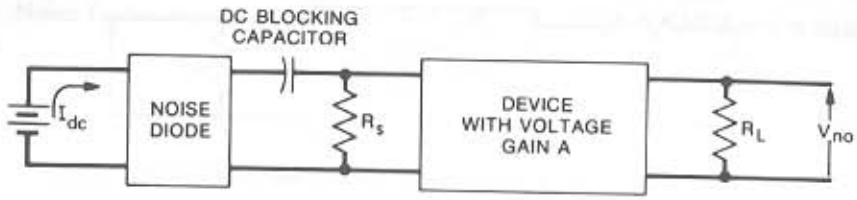

Figure 9-3. *Noise-diode method of measuring noise factor.*

Using Thevenin's theorem, the shot-noise current generator can be replaced by a voltage generator V_{sh} in series with R_s, where

$$V_{sh} = I_{sh} R_s \,. \tag{9-16}$$

The rms noise voltage output V_{no} is first measured with the diode current equal to zero. This voltage consists of two parts: that due to the thermal noise of the source resistor, and that due to the noise in the device. Therefore

$$V_{no} = \sqrt{(AV_t)^2 + (\text{Device noise})^2} \,. \tag{9-17}$$

Diode current is then allowed to flow and is increased until the output noise power doubles (output rms voltage increases by 3 dB). Under these conditions the following equation is satisfied:

$$(AV_{sh})^2 + (V_{no})^2 = 2(V_{no})^2 \,; \tag{9-18}$$

therefore

$$V_{no} = AV_{sh} = AI_{sh}R_s \,. \tag{9-19}$$

Substituting V_{no} from Eq. 9-19 into Eq. 9-7, gives

$$F = \frac{(I_{sh}R_s)^2}{V_t^2} \,. \tag{9-20}$$

Substituting Eqs. 9-15 and 9-5 for I_{sh} and V_t, respectively, gives

$$F = 20 I_{dc} R_s \,. \tag{9-21}$$

The noise factor is now a function of only the direct current through the diode, and the value of the source resistance. Both of these quantities are easily measured. Neither the gain nor the noise bandwidth of the device need be known.

CALCULATING *S/N* RATIO AND INPUT NOISE VOLTAGE FROM NOISE FACTOR

Once noise factor is known, it can be used to calculate the signal-to-noise ratio and the input noise voltage. For these calculations it is important that the source resistance used in the circuit be the same as that used to make the noise factor measurement. Rearranging Eq. 9-8 gives

$$V_{no} = A\sqrt{4kTBR_sF} \,. \tag{9-22}$$

If the input signal is V_s, the output signal voltage is $V_o = AV_s$. Therefore the output signal-to-noise power ratio is

$$\frac{S_o}{N_o} = \frac{P_{\text{signal}}}{P_{\text{noise}}} \,, \tag{9-23}$$

or

$$\frac{S_o}{N_o} = \left(\frac{AV_s}{V_{no}}\right)^2 \,. \tag{9-24}$$

Using Eq. 9-22 to substitute for V_{no},

$$\frac{S_o}{N_o} = \frac{(V_s)^2}{4kTBR_sF} \,. \tag{9-25}$$

Signal-to-noise ratio, as used in Eqs. 9-23, 9-24, and 9-25, refers to a power ratio. However, signal-to-noise is sometimes expressed as a voltage ratio. Care should be taken as to whether a specified signal-to-noise ratio is a power or voltage ratio, since the two are not numerically equal. When expressed in decibels, the power signal-to-noise ratio is $10 \log (S_o/N_o)$.

Another useful quantity is the total equivalent input noise voltage (V_{nt}), which is the output noise voltage (Eq. 9-22) divided by the gain

$$\boxed{V_{nt} = \frac{V_{no}}{A} = \sqrt{4kTBR_sF} \,.} \tag{9-26}$$

The total equivalent input noise voltage is a single noise source that represents the total noise in the circuit. *For optimum noise performance, V_{nt} should be minimized.* Minimizing V_{nt} is equivalent to maximizing the signal-to-noise ratio, provided the signal voltage remains constant. This is discussed further in the section on optimum source resistance.

The equivalent input noise voltage consists of two parts, one due to the thermal noise of the source and the other due to the device noise.

Representing the device noise by V_{nd}, we can write the total equivalent input noise voltage as

$$V_{nt} = \sqrt{(V_t)^2 + (V_{nd})^2}\,, \tag{9-27}$$

where V_t is the open circuit thermal noise voltage of the source resistance. Solving Eq. 9-27 for V_{nd} gives

$$V_{nd} = \sqrt{(V_{nt})^2 - (V_t)^2}\,. \tag{9-28}$$

Substituting Eqs. 9-4 and 9-26 into Eq. 9-28 gives

$$V_{nd} = \sqrt{4kTBR_s(F-1)}\,. \tag{9-29}$$

NOISE VOLTAGE AND CURRENT MODEL

A more recent approach, and one that overcomes the limitations of noise factor, is to model the noise in terms of an equivalent noise voltage and current. The actual network can be modeled as a noise-free device with two noise generators, V_n and I_n, connected to the input side of a network, as shown in Fig. 9-4. V_n represents the device noise that exists when R_s equals zero, and I_n represents the additional device noise that occurs when R_s does not equal zero. The use of these two noise generators plus a complex correlation coefficient (not shown) completely characterizes the noise performance of the device (Rothe and Dahlke 1956). Although V_n and I_n are normally correlated to some degree, values for the correlation coefficient are seldom given on manufacturers data sheets. In addition the typical spread of values of V_n and I_n for a device normally overshadows the effect of the correlation coefficient. Therefore it is common practice to assume the correlation coefficient is equal to zero. This will be done in the remainder of this chapter.

Figure 9-5 shows representative curves of noise voltage and noise current. As can be seen in Fig. 9-5, the data normally consist of a plot of $V_n/\sqrt{B}$ and

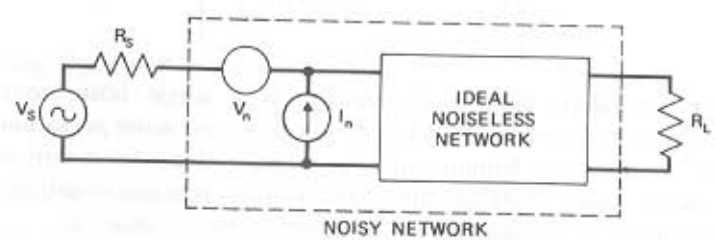

Figure 9-4. *A noisy network modeled by the addition of an input noise voltage and current source.*

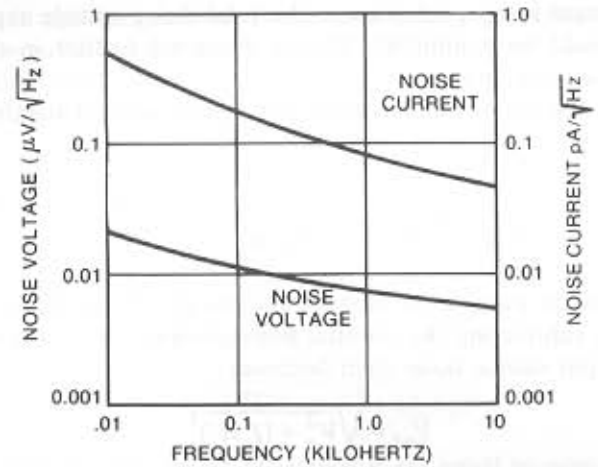

Figure 9-5. *Typical noise voltage $V_n/\sqrt{B}$ and noise current $I_n/\sqrt{B}$ curves.*

$I_n/\sqrt{B}$ versus frequency. The noise voltage or current over a band of frequencies can be found by integrating $[V_n/\sqrt{B}]^2$ or $[I_n/\sqrt{B}]^2$ versus frequency and then taking the square root of the result. In the case when $V_n/\sqrt{B}$ or $I_n/\sqrt{B}$ is constant over the desired bandwidth, the total noise voltage or current can be found simply by multiplying $V_n/\sqrt{B}$ or $I_n/\sqrt{B}$ by the square root of the bandwidth.

Using these curves and the equivalent circuit of Fig. 9-4, the total equivalent input noise voltage, signal-to-noise ratio, or noise factor for any circuit can be determined. This can be done for any source impedance, resistive or reactive, and across any frequency spectrum. The device must, however, be operated at or near the bias conditions for which the curves are specified. Quite often, additional curves are given showing the variation of these noise generators with bias points. With a set of these curves the noise performance of the device is completely specified under all operating conditions.

The representation of noise data in terms of the equivalent parameters V_n and I_n can be used for any device. Field effect transistors and op-amps are usually specified in this manner. Some bipolar transistor manufacturers are also beginning to use the V_n–I_n parameters instead of noise factor.

The total equivalent input noise voltage of a device is an important parameter. Assuming no correlation between noise sources, this voltage, which combines the affect of V_n, I_n, and the thermal noise of the source, can be written as

$$V_{nt} = \sqrt{4kTBR_s + V_n^2 + (I_nR_s)^2}\,, \tag{9-30}$$

where V_n and I_n are the noise voltage and noise current over the bandwidth

B. For optimum noise performance the total noise voltage represented by Eq. 9-30 should be minimized. This is discussed further in the optimum source resistance section.

The total equivalent input voltage per square root of bandwidth can be written as

$$\frac{V_{nt}}{\sqrt{B}} = \sqrt{4kTR_s + \left(\frac{V_n}{\sqrt{B}}\right)^2 + \left(\frac{I_n R_s}{\sqrt{B}}\right)^2}. \tag{9-31}$$

The equivalent input noise voltage due to the device noise only can be calculated by subtracting the thermal noise component from Eq. 9-30. The equivalent input device noise then becomes

$$V_{nd} = \sqrt{V_n^2 + (I_n R_s)^2}. \tag{9-32}$$

Figure 9-6 is a plot of the total equivalent noise voltage per square root of the bandwidth for a typical low-noise bipolar transistor, junction field effect transistor, and op-amp. The thermal noise voltage generated by the source resistance is also shown. The thermal noise curve places a lower limit on the total input noise voltage. As can be seen from this figure, when the source resistance is between 10,000 Ω and 1 MΩ, this FET has a total noise voltage only slightly greater than the thermal noise in the source resistance. On the basis of noise this FET approaches an ideal device when the source

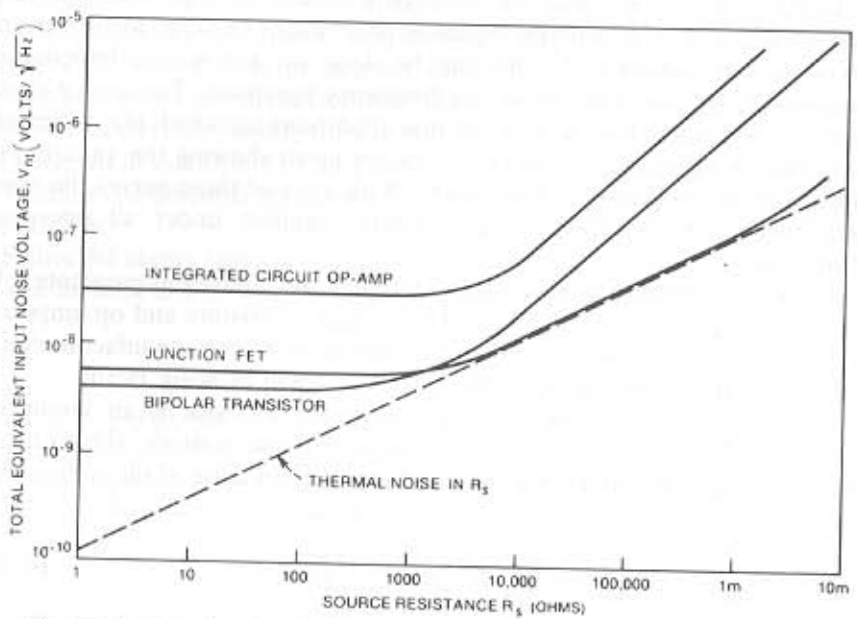

Figure 9-6. *Typical total equivalent noise voltage curves for three types of devices.*

resistance is in this range. With low source resistance, however, a bipolar transistor generally has less noise than an FET. In most cases the op-amp has more noise than either of the other devices. The reasons for this are discussed in the section on op-amp noise.

MEASURMENT OF V_n AND I_n

It is a relatively simple matter to measure the parameters V_n and I_n for a device. The method can best be described by referring to Fig. 9-4 and recalling from Eq. 9-30 that the total equivalent noise voltage V_{nt} is

$$V_{nt} = \sqrt{4kTBR_s + V_n^2 + (I_n R_s)^2}. \tag{9-33}$$

To determine V_n, the source resistance is set equal to zero, causing two terms in Eq. 9-33 to equal zero, and the output noise voltage V_{no} is measured. If the voltage gain of the circuit is A,

$$V_{no} = AV_{nt} = AV_n, \qquad \text{for } R_s = 0. \tag{9-34}$$

The equivalent input noise voltage is

$$V_n = \frac{V_{no}}{A}, \qquad \text{for } R_s = 0. \tag{9-35}$$

To measure I_n, a second measurement is made with a very large source resistance. The source resistance should be large enough so that the first two terms in Eq. 9-33 are negligible. This will be true if the measured output noise voltage V_{no} is

$$V_{no} \gg A\sqrt{4kTBR_s + V_n^2}.$$

Under these conditions the equivalent input noise current is

$$I_n = \frac{V_{no}}{AR_s}, \qquad \text{for } R_s \text{ large}. \tag{9-36}$$

CALCULATING NOISE FACTOR AND S/N RATIO FROM V_n–I_n

Knowing the equivalent input noise voltage V_n, the current I_n, and the source resistance R_s, the noise factor can be calculated by referring to Fig. 9-4. This derivation is left as a problem in Appendix D. The result is

$$F = 1 + \frac{1}{4kTB}\left(\frac{V_n^2}{R_s} + I_n^2 R_s\right), \tag{9-37}$$

where V_n and I_n are the equivalent input noise voltage and current over the bandwidth B of interest.

The value of R_s producing the minimum noise factor can be determined from Eq. 9-37 by differentiating it with respect to R_s. The resulting R_s for minimum noise factor is

$$R_{so} = \frac{V_n}{I_n} . \tag{9-38}$$

If Eq. 9-38 is substituted back into Eq. 9-37, the minimum noise factor can be determined and is

$$F_{\min} = 1 + \frac{V_n I_n}{2kTB} . \tag{9-39}$$

The output power signal-to-noise ratio can also be calculated from the circuit of Fig. 9-4. This derivation is left as a problem in Appendix D. The result is

$$\frac{S_o}{N_o} = \frac{(V_s)^2}{(V_n)^2 + (I_n R_s)^2 + 4kTBR_s} , \tag{9-40}$$

where V_s is the input signal voltage.

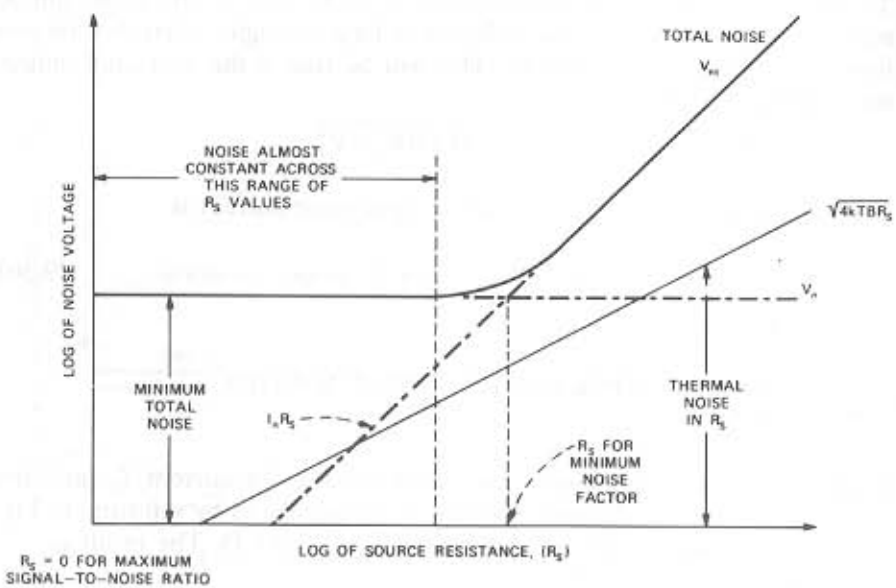

Figure 9-7. *Total equivalent input noise voltage V_{nt} for a typical device. The total noise voltage is made up of three components (thermal noise, V_n, and I_nR_s) as was shown in Eq. 9-30.*

For constant V_s maximum signal-to-noise ratio occurs when $R_s = 0$, and is

$$\left.\frac{S_o}{N_o}\right|_{\max} = \left(\frac{V_s}{V_n}\right)^2 . \tag{9-41}$$

It should be noted that when V_s is constant and R_s is variable minimum noise factor occurs when $R_s = V_n/I_n$, but maximum signal-to-noise ratio occurs at $R_s = 0$. Minimum noise factor therefore does not necessarily represent maximum signal-to-noise ratio or minimum noise. This can best be understood by referring to Fig. 9-7, which is a plot of the total equivalent input noise voltage V_{nt} for a typical device. When $R_s = V_n/I_n$, the ratio of the device noise to the thermal noise is a minimum. However, the device noise and the thermal noise are both minimum when $R_s = 0$. Although minimum equivalent input noise voltage (and maximum signal-to-noise ratio) occurs mathematically at $R_s = 0$, there is actually a range of values of R_s over which it is almost constant, as shown in Fig. 9-7. In this range, V_n of the device is the predominant noise source. For large values of source resistance, I_n is the predominant noise source.

OPTIMUM SOURCE RESISTANCE

Since the maximum signal-to-noise ratio occurs at $R_s = 0$ and minimum noise factor occurs at $R_s = V_n/I_n$, the question of what is the optimum source resistance for the best noise performance arises. The requirement of a zero resistance source is impractical since all actual sources have a finite source resistance. However, as was shown in Fig. 9-7, as long as R_s is small there is a range of values over which the total noise voltage is almost constant.

In practice, the circuit designer does not always have control over the source resistance. A source of fixed resistance is used for one reason or another. The question then arises as to whether this source resistance should be transformed to the value that produces minimum noise factor. The answer to this question depends on how the transformation is made.

If the actual source resistance is less than $R_s = V_n/I_n$, a physical resistor should not be inserted in series with R_s to increase the resistance. To do this would produce three detrimental effects:

1. It increases the thermal noise due to the larger source resistance. (This increase is proportional to $\sqrt{R}$.)
2. It increases the noise due to the current from the input noise current generator flowing through the larger resistor. (This increase is proportional to R.)
3. It decreases the amount of the signal getting to the amplifier.

The noise performance can, however, be improved by using a transformer to effectively raise the value of R_s to a value closer to $R_s = V_n/I_n$, thus minimizing the noise produced by the device. At the same time the signal voltage is stepped up by the turns ratio of the transformer. This effect is cancelled by the fact that the thermal noise voltage of the source resistance is also stepped up by the same factor. There is, however, a net increase in signal-to-noise ratio when this is done.

If the actual source resistance is greater than that required for minimum noise factor, noise performance can still be improved by transforming the higher value of R_s to a value closer to $R_s = V_n/I_n$. The noise will, however, be greater than if a lower-impedance source were used.

For optimum noise peformance, the lowest possible source impedance should be used. Once this is decided, noise performance can be further improved by transformer coupling this source to match the impedance $R_s = V_n/I_n$.

The improvement in signal-to-noise ratio that is possible by using a transformer can best be seen by rewriting Eq. 9-3 as

$$\frac{S_o}{N_o} = \frac{1}{F}\left(\frac{S_i}{N_i}\right). \tag{9-42}$$

Assuming a fixed source resistance, adding an ideal transformer of any turns ratio does not change the input signal-to-noise ratio. With the input signal-to-noise ratio fixed, the output signal-to-noise ratio will be maximized when the noise factor F is a minimum. F is a minimum when the device sees a source resistance $R_s = V_n/I_n$. Therefore transformer coupling the actual source resistance minimizes F and maximizes the output signal-to-noise ratio. If the value of the source resistance is not fixed, choosing R_s to minimize F does not necessarily produce optimum noise performance. However, for a given source resistance R_s, the least noisy circuit is the one with the smallest F.

When using transformer coupling, thermal noise in the transformer winding must be accounted for. This can be done by adding to the source resistance the primary winding resistance, plus the secondary winding resistance divided by the square of turns ratio. The turns ratio is defined as the number of turns of the secondary divided by the number of turns of the primary. Despite this additional noise introduced by the transformer, the signal-to-noise ratio is normally increased sufficiently to justify using the transformer if the actual source resistance is more than an order of magnitude different than the optimum source resistance.

Another source of noise to consider when using a transformer is its sensitivity to pickup from magnetic fields. Shielding the transformer is often necessary to reduce this pickup to an acceptable level.

The improvement in signal-to-noise ratio due to transformer coupling can be expressed in terms of the signal-to-noise improvement (SNI) factor

defined as

$$\text{SNI} = \frac{(S/N)\text{ using transformer}}{(S/N)\text{ without transformer}}. \tag{9-43}$$

It can be shown that the signal-to-noise improvement factor can also be expressed in a more useful form as

$$\text{SNI} = \frac{(F)\text{ without tranformer}}{(F)\text{ with transformer}}. \tag{9-44}$$

NOISE FACTOR OF CASCADED STAGES

Signal-to-noise ratio and total equivalent input noise voltage should be used in designing the components of a system for optimum noise performance. Once the components of a system have been designed, it is usually advantageous to express the noise performance of the individual components in terms of noise factor. The noise factor of the various components can then be combined as follows.

The overall noise factor of a series of networks connected in cascade (see Fig. 9-8) was shown by Friis (1944) to be

$$F = F_1 + \frac{F_2 - 1}{G_1} + \frac{F_3 - 1}{G_1 G_2} + \cdots + \frac{F_m - 1}{G_1 G_2 \cdots G_{m-1}}, \tag{9-45}$$

where F_1 and G_1 are the noise factor and available power gain* of the first stage, F_2, G_2 are those of the second stage.

Equation 9-45 clearly shows the important fact that *with sufficient gain G_1 in the first stage of a system, the total noise factor is primarily determined by the noise factor F_1 of the first stage.*

Example 9-1. Figure 9-9 shows a number of identical amplifiers operating in cascade on a transmission line. Each amplifier has an available power gain

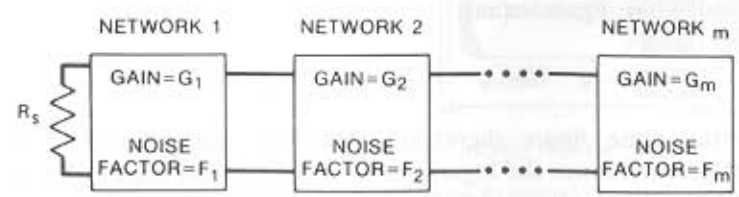

Figure 9-8. *Networks in cascade.*

*$G = A^2R_s/R_o$, where A is the open-circuit voltage gain (open-circuit output voltage divided by source voltage). R_s is the source resistance, and R_o is the network output impedance.

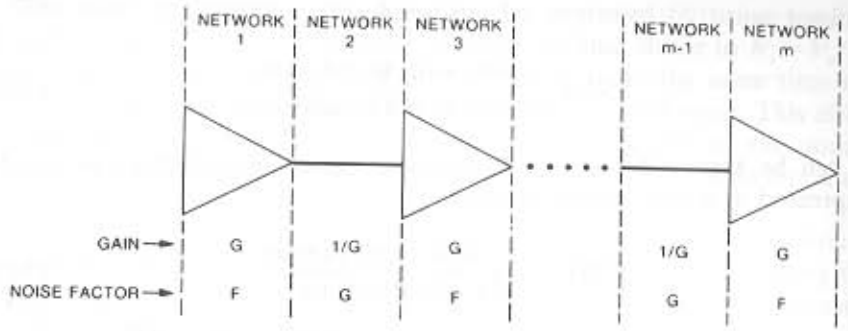

Figure 9-9. *Amplifiers equally spaced on a transmission line.*

G, and the amplifiers are spaced so the loss in the section of cable between amplifiers is also G. This type of arrangement can be used in a telephone trunk circuit or a CATV distribution system. The amplifiers have an available power gain equal to G and a noise factor F. The cable sections have an insertion gain $1/G$ and a noise factor G.* Equation 9-45 then becomes

$$F_t = F + \frac{G-1}{G} + \frac{F-1}{1} + \frac{G-1}{G} + \frac{F-1}{1} + \cdots + \frac{F-1}{1}, \quad (9\text{-}46)$$

$$F_t = F + 1 - \frac{1}{G} + F - 1 + 1 - \frac{1}{G} + F - 1 + \cdots + F - 1. \quad (9\text{-}47)$$

For K amplifiers and $K-1$ cable sections,

$$F_t = KF - \frac{K-1}{G}. \quad (9\text{-}48)$$

If $FG \gg 1$,

$$F_t = KF. \quad (9\text{-}49)$$

The overall noise figure equals

$$(NF)_t = 10 \log F + 10 \log K. \quad (9\text{-}50)$$

The overall noise figure therefore equals the noise figure of the first amplifier plus ten times the logarithm of the number of stages. Another way of looking at this is that every time the number of stages is doubled, the

*This can be derived by applying the basic noise factor definition (Eq. 9-1) to the cable section. The cable is considered a matched transmission line operating at its characteristic impedance.

noise figure increases by 3 dB. This limits the maximum number of amplifiers that can be cascaded.

Example 9-2. Figure 9-10 shows an antenna connected to a TV set by a section of 300-Ω matched transmission line. If the transmission line has 6 dB of insertion loss and the TV set has a noise figure of 14 dB, what signal voltage is required at the antenna terminal for a 40-dB signal-to-noise ratio at the terminals of the TV set? To solve this problem, all the noise sources in the system are converted to equivalent noise voltages at one point, in this case the input to the TV set. The noise voltages can then be combined, and the appropriate signal level needed to produce the required signal-to-noise ratio can be calculated.

The thermal noise at the input of the TV set due to a 300-Ω input impedance with a 4-MHz bandwidth is −53.2 dBmV (2.2 μV).* Since the TV set adds 14 dB of noise to the input thermal noise, the total input noise level is −39.2 dBmV (thermal noise voltage in dB + noise figure). Since a signal-to-noise ratio of 40 dB is required, the signal voltage at the amplifier input must be +0.5 dBmV (total input noise in dB + signal-to-noise ratio in

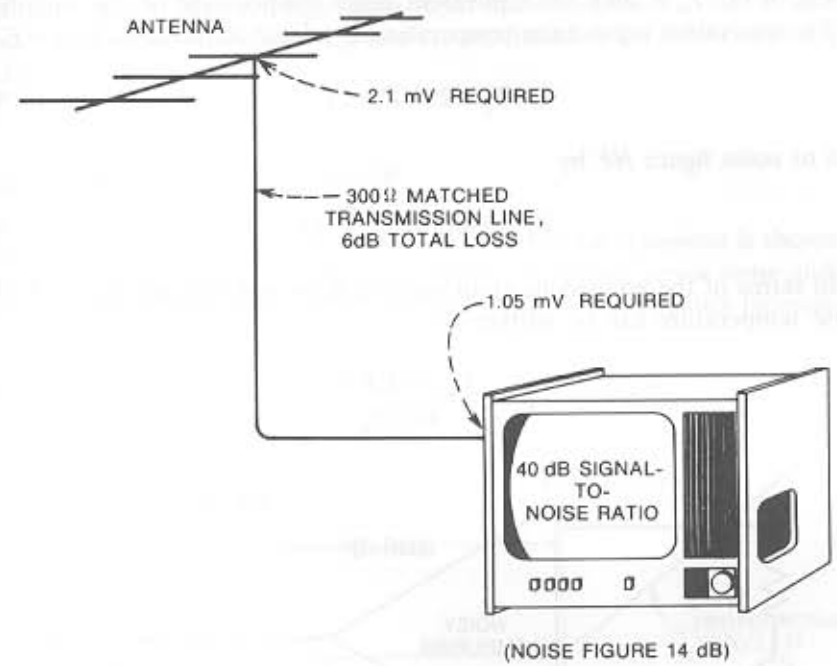

Figure 9-10. *TV set connected to antenna.*

*The open circuit noise voltage at room temperature (290°K) for a 300-Ω resistor and a 4-MHz bandwidth is 4.4 μV. When this source is connected to a 300-Ω load, it delivers one-half of this voltage, or 2.2 μV, to the load.

dB). The transmission line has 6 dB of loss, so the signal voltage at the antenna terminal must be +6.5 dBmV or 2.1 mV. To be able to add terms directly, as in this example, all the quantities must be referenced to the same impedance level, in this case 300 Ω.

NOISE TEMPERATURE

Another method of specifying noise performance of a circuit or device is by the concept of equivalent input noise temperature (T_e).

The equivalent input noise temperature of a circuit can be defined as the increase in source resistance temperature necessary to produce the observed noise power at the output of the circuit. The standard reference temperature T_0 for noise temperature measurements is 290°K.

Figure 9-11 shows a noisy amplifier with a source resistance R_s at temperature T_0. The total measured output noise is V_{no}. Figure 9-12 shows an ideal noiseless amplifier having the same gain as the amplifier in Fig. 9-11 and also a source resistance R_s. The temperature of the source resistance is now increased by T_e, so the total measured output noise V_{no} is the same as in Fig. 9-11. T_e is then the equivalent noise temperature of the amplifier.

The equivalent input noise temperature is related to the noise factor F by

$$T_e = 290(F-1) \tag{9-51}$$

and to noise figure NF by

$$T_e = 290(10^{NF/10}-1)\,. \tag{9-52}$$

In terms of the equivalent input noise voltage and current ($V_n - I_n$), the noise temperature can be written as

$$T_e = \frac{V_n^2 + (I_n R_s)^2}{4kBR_s}\,. \tag{9-53}$$

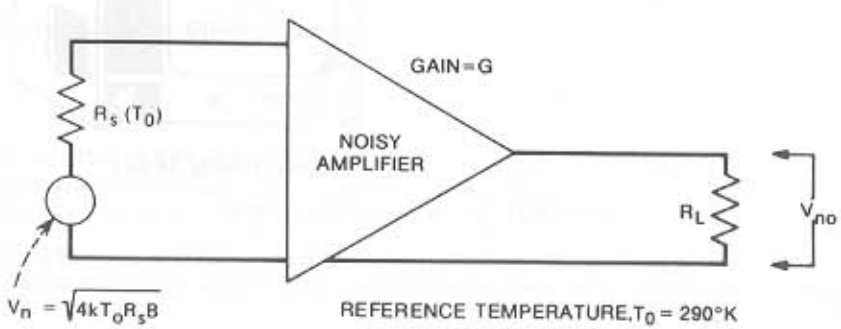

Figure 9-11. *Amplifier with noise.*

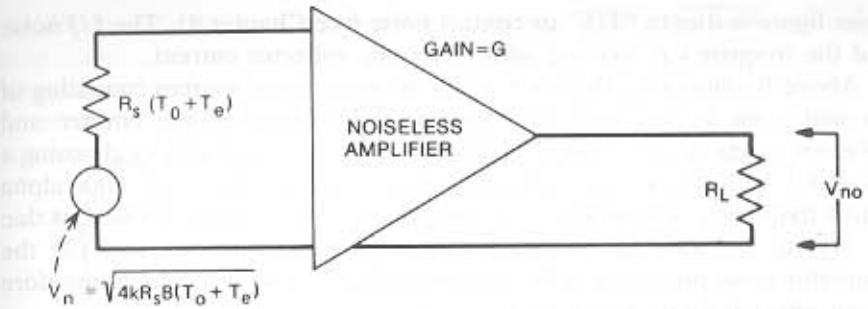

Figure 9-12. *Source resistance temperature increased to account for amplifier noise.*

The equivalent input noise temperature of a number of amplifiers in cascade can be shown to be

$$T_{e(\text{total})} = T_{e1} + \frac{T_{e2}}{G_1} + \frac{T_{e3}}{G_1G_2} + \cdots, \tag{9-54}$$

where T_{e1} and G_1 are the equivalent input noise temperature and available power gain of the first stage, T_{e2} and G_2 are the same for the second stage, and so on.

BIPOLAR TRANSISTOR NOISE

The noise figure versus frequency for a typical bipolar transistor is shown in Fig. 9-13. It can be seen that the noise figure is constant across some middle range of frequencies and rises on both sides. The low-frequency increase in

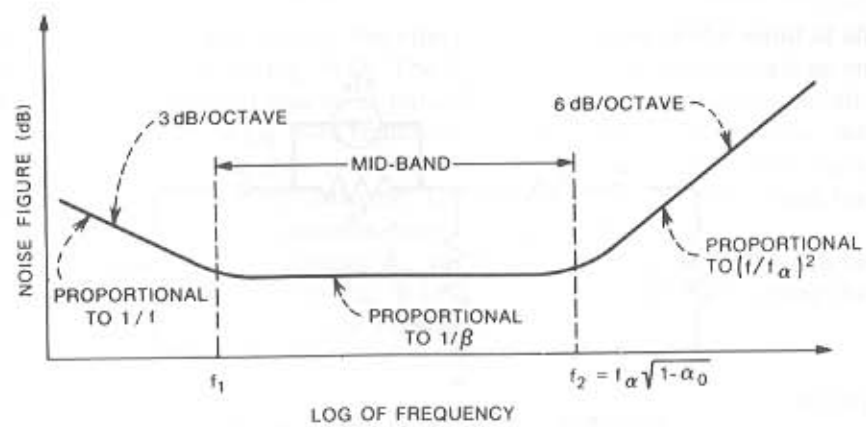

Figure 9-13. *Noise figure versus frequency for bipolar transistor.*

noise figure is due to "$1/f$" or contact noise (see Chapter 8). The $1/f$ noise and the frequency f_1 increase with increasing collector current.

Above frequency f_1, the noise is due to white noise sources consisting of thermal noise in the base resistance and shot noise in the emitter and collector junctions. The white noise sources can be minimized by choosing a transistor with small base resistance, large current gain, and high alpha cutoff frequency. The increase in noise figure at frequencies above f_2 is due to (1) the decrease in transistor gain at these frequencies and (2) the transistor noise produced in the output (collector) junction, which therefore is not affected by transistor gain.

For a typical audio transistor the frequency f_1, below which the noise begins to increase, may be between 1 and 50 kHz. The frequency f_2, above which the noise increases, is usually greater than 10 MHz. In transistors designed for rf use, f_2 may be much higher.

Transistor Noise Factor

The theoretical expression for bipolar transistor noise factor can be derived by starting with the T-equivalent circuit of a transistor, as shown in Fig. 9-14, neglecting the leakage term I_{CBO}. By neglecting $r_c (r_c \gg R_L)$ and adding the following noise sources—(1) thermal noise of the base resistance, (2) shot noise in emitter diode, (3) shot noise in collector, and (4) thermal noise in the source resistance—the circuit can be revised to form the equivalent circuit shown in Fig. 9-15.

The noise factor can be obtained from the circuit in Fig. 9-15 and the relationships

$$I_c = \alpha_o I_e , \tag{9-55}$$

$$r_e = \frac{kT}{qI_e} \approx \frac{26}{I_e(\text{ma})} , \tag{9-56}$$

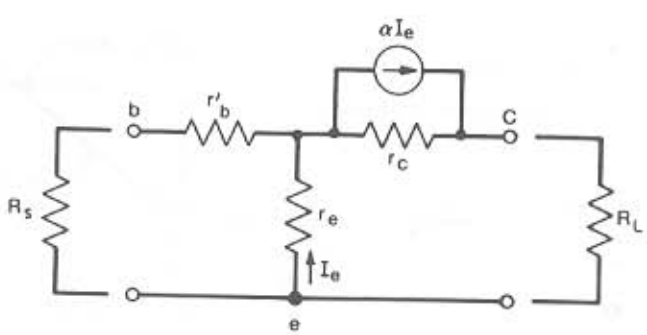

Figure 9-14. *T-equivalent circuit for a transistor.*

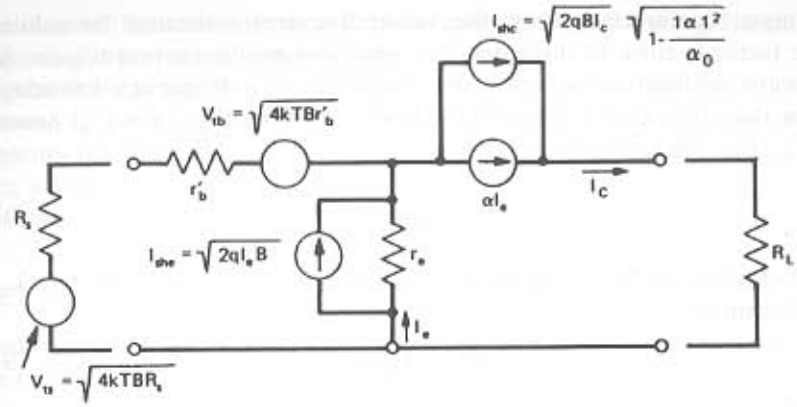

Figure 9-15. *Equivalent circuit of a transistor including noise sources.*

$$|\alpha| = \frac{|\alpha_o|}{\sqrt{1 + (f/f_\alpha)^2}} , \tag{9-57}$$

where α_o is the dc value of the transistor common-base current gain alpha, k is Boltzmann's constant, q is the electron charge, f_α is the transistor alpha cutoff frequency, and f is the frequency variable. Using this equivalent circuit, Nielsen (1957) has shown the noise factor of the transistor to be

$$F = 1 + \frac{r'_b}{R_s} + \frac{r_e}{2R_s} + \frac{(r_e + r'_b + R_s)^2}{2r_e R_s \beta_o}\left[1 + \left(\frac{f}{f_\alpha}\right)^2 (1 + \beta_o)\right] , \tag{9-58}$$

where β_o is the dc value of the common-emitter current gain beta,

$$\beta_o = \frac{\alpha_o}{1 - \alpha_o} . \tag{9-59}$$

This equation does not include the effect of the $1/f$ noise and is valid at all frequencies above f_1 in Fig. 9-13. The $1/f$ noise can be represented as an additional noise current source in parallel with αI_e in the collector circuit.

The second term in Eq. 9-58 represents the thermal noise in the base, the third term represents shot noise in the emitter, and the fourth term represents shot noise in the collector. This equation is applicable to both the common-emitter and the common-base configurations.

The value of source resistance R_{so} for the minimum noise factor can be determined by differentiating Eq. 9-58 with respect to R_s and setting the result equal to zero. This source resistance is found to be

$$R_{so} = \left[(r'_b + r_e)^2 + \frac{(2r'_b + r_e)\beta_o r_e}{1 + (f/f_\alpha)^2 (1 + \beta_o)}\right]^{1/2} \tag{9-60}$$

For most bipolar transistors, the value of source resistance for minimum noise factor is close to the value that produces maximum power gain. Most transistor applications operate the transistor at a frequency considerably below the alpha cutoff frequency. Under this condition ($f \ll f_\alpha$), assuming $\beta_o \gg 1$, Eq. 9-60 reduces to

$$R_{so} = \sqrt{(2r_b' + r_e)\beta_o r_e}\,. \tag{9-61}$$

If in addition the base resistance r_b' is negligible (not always the case), Eq. 9-61 becomes

$$R_{so} \approx r_e\sqrt{\beta_o}\,. \tag{9-62}$$

This equation is also useful for making quick approximations of the source resistance that produces minimum noise factor. Equation 9-62 shows that the higher the common-emitter current gain β_o of the transistor, the higher will be the value of R_{so}.

V_n–I_n for Transistor

To determine the parameters for the equivalent input noise voltage and current model, we must first determine the total equivalent input noise voltage V_{nt}. Substituting Eq. 9-58 into Eq. 9-26, and squaring the result, gives

$$V_{nt}^2 = 2kTB(r_e + 2r_b' + 2R_s) + \frac{2kTB(r_e + r_b' + R_s)^2}{r_e\beta_o}\left[1 + \left(\frac{f}{f_\alpha}\right)^2(1+\beta_o)\right]. \tag{9-63}$$

The equivalent input noise voltage squared V_n^2 is obtained by making $R_s = 0$ in Eq. 9-63 (see Eqs. 9-34 and 9-35), giving

$$V_n^2 = 2kTB(r_e + 2r_b') + \frac{2kTB(r_e + r_b')^2}{r_e\beta_o}\left[1 + \left(\frac{f}{f_\alpha}\right)^2(1+\beta_o)\right]. \tag{9-64}$$

To determine I_n^2, we must divide Eq. 9-63 by R_s^2 and then make R_s large (see Eqs. 9-34 and 9-36), giving

$$I_n^2 = \frac{2kTB}{r_e\beta_o}\left[1 + \left(\frac{f}{f_\alpha}\right)^2(1+\beta_o)\right]. \tag{9-65}$$

JUNCTION FIELD EFFECT TRANSISTOR NOISE

There are three important noise mechanisms in a junction FET: (1) the shot noise produced in the reverse biased gate, (2) the thermal noise generated

in the channel between source and drain, and (3) the $1/f$ noise generated in the space charge region between gate and channel.

Figure 9-16 is the noise equivalent circuit for a junction FET. Noise generator I_{sh} represents the shot noise in the gate circuit, and generator I_{tc} represents the thermal noise in the channel. I_{ts} is the thermal noise of the source admittance G_s. The FET has an input admittance g_{11}, and a forward transconductance g_{fs}.

FET Noise Factor

Assuming no correlation between I_{sh} and I_{tc}* in Fig. 9-16, the total output noise current can be written as

$$I_{out} = \left[\frac{4kTBG_s g_{fs}^2}{(G_s + g_{11})^2} + \frac{I_{sh}^2 g_{fs}^2}{(G_s + g_{11})^2} + I_{tc}^2\right]^{1/2}. \tag{9-66}$$

The output noise current due to the thermal noise of the source only is

$$I_{out}(\text{source}) = \left(\frac{\sqrt{4kTBG_s}}{G_s + g_{11}}\right)g_{fs}\,. \tag{9-67}$$

The noise factor F is Eq. 9-66 squared, divided by Eq. 9-67 squared, or

$$F = 1 + \frac{I_{sh}^2}{4kTBG_s} + \frac{I_{tc}^2}{4kTBG_s(g_{fs})^2}(G_s + g_{11})^2\,. \tag{9-68}$$

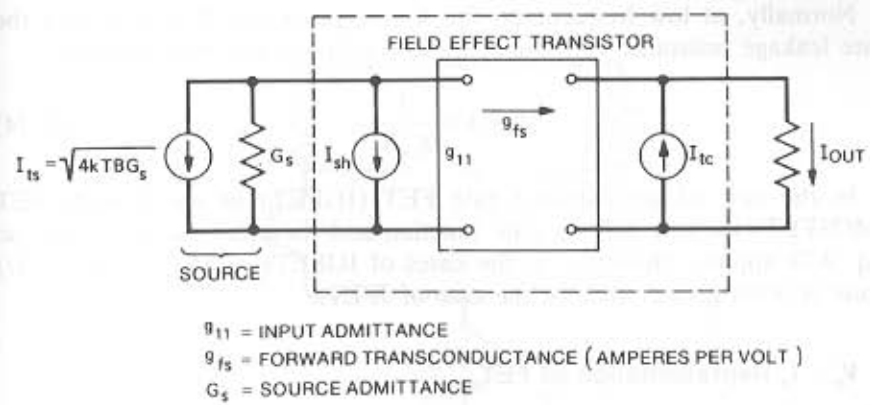

Figure 9-16. *Noise equivalent of junction field effect transistor.*

*At high frequencies, noise generators I_{sh} and I_{tc} show some correlation. As a practical matter, however, this is normally neglected.

I_{sh} is the input shot noise and equals

$$I_{sh} = \sqrt{2qI_{gss}B}\,, \tag{9-69}$$

where I_{gss} is the total gate leakage current. I_{tc} is the thermal noise of the channel and equals

$$I_{tc} = \sqrt{4kTBg_{fs}}\,. \tag{9-70}$$

Substituting Eqs. 9-69 and 9-70 into 9-68, and recognizing that

$$\frac{2q}{4kT}I_{gss} = g_{11}\,, \tag{9-71}$$

gives for the noise factor

$$F = 1 + \frac{g_{11}}{G_s} + \frac{1}{G_s g_{fs}}(G_s + g_{11})^2\,. \tag{9-72}$$

Rewriting Eq. 9-72 in terms of the resistances instead of admittances gives

$$F = 1 + \frac{R_s}{r_{11}} + \frac{R_s}{g_{fs}}\left(\frac{1}{R_s} + \frac{1}{r_{11}}\right)^2\,. \tag{9-73}$$

Neither Eq. 9-72 nor Eq. 9-73 include the effect of the $1/f$ noise. The second term in the equations represent the contribution from the shot noise in the gate junction. The third term represents the contribution of the thermal noise in the channel.

For low noise operation, an FET should have high gain (large g_{fs}) and a high input resistance r_{11} (small gate leakage).

Normally, at low frequencies, the source resistance R_s is less than the gate leakage resistance r_{11}. Under these conditions Eq. 9-73 becomes

$$F \approx 1 + \frac{1}{g_{fs}R_s}\,. \tag{9-74}$$

In the case of an insulated gate FET (IGFET) or metal oxide FET (MOSFET) there is no p–n gate junction and therefore no shot noise, so Eq. 9-74 applies. However, in the cases of IGFETs or MOSFETs the $1/f$ noise is often greater than in the case of JFETs.

$V_n - I_n$ Representation of FET

The total equivalent input noise voltage can be obtained by substituting Eq. 9-73 into Eq. 9-26, giving

$$V_{ni}^2 = 4kTBR_s\left[1 + \frac{R_s}{r_{11}} + \frac{R_s}{g_{fs}}\left(\frac{1}{R_s} + \frac{1}{r_{11}}\right)^2\right]. \tag{9-75}$$

Making $R_s = 0$ in Eq. 9-75 gives the equivalent input noise voltage squared (see Eqs. 9-34 and 9-35) as

$$V_n^2 = \frac{4kTB}{g_{fs}}\,. \tag{9-76}$$

To determine I_n^2, we must divide Eq. 9-75 by R_s^2 and then make R_s large (see Eqs. 9-34 and 9-36), giving

$$I_n^2 = \frac{4kTB(1 + g_{fs}r_{11})}{g_{fs}r_{11}^2}\,. \tag{9-77}$$

For the case when $g_{fs}r_{11} \gg 1$, Eq. 9-77 becomes

$$I_n^2 = \frac{4kTB}{r_{11}}\,. \tag{9-78}$$

NOISE IN IC OPERATIONAL AMPLIFIERS

The input stage of an operational amplifier is of primary concern in determining the noise performance of the device. Most monolithic op-amps use a differential input configuration that uses two and sometimes four input transistors. Figure 9-17 shows a simplified schematic of a typical two-transistor input circuit used in an operational amplifier. Since two input transistors are used, the noise voltage is approximately $\sqrt{2}$ times that for a single-transistor input stage. In addition some monolithic transistors have

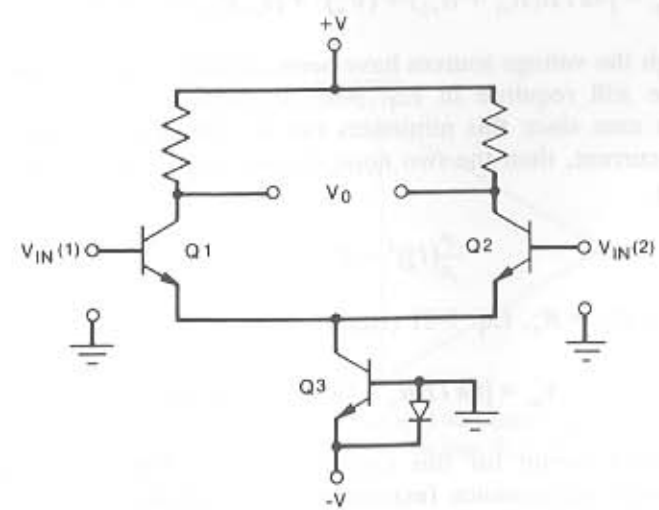

Figure 9-17. *Typical input circuit schematic of an IC operational amplifier. Transistor Q_3 acts as a constant current source to provide dc bias for the input tranistors Q_1 and Q_2.*

lower current gains (β) than discrete transistors, and that also increases the noise.

Therefore, in general, operational amplifiers are inherently higher noise devices than discrete transistor amplifiers. This can be seen in the typical equivalent input noise voltage curves shown in Fig. 9-6. A discrete bipolar transistor stage preceding an op-amp can often provide lower noise performance along with the other advantages of the operational amplifier. Op-amps do have the advantage of a balanced input with low temperature drift and low-input offset currents.

The noise characteristics of an operational amplifier can best be modeled by using the equivalent input noise voltage and current $V_n - I_n$. Figure 9-18A shows a typical operational amplifier circuit. Figure 9-18B shows this same cicuit with the equivalent noise voltage and current sources included.

The equivalent circuit in Fig. 9-18B can be used to calculate the total equivalent input noise voltage, which is

$$V_{nt} = [4kTB(R_{s1} + R_{s2}) + V_{n1}^2 + V_{n2}^2 + (I_{n1}R_{s1})^2 + (I_{n2}R_{s2})^2]^{1/2}. \tag{9-79}$$

It should be noted that V_{n1}, V_{n2}, I_{n1}, and I_{n2} are also functions of the bandwidth B.

The two noise voltage sources of Eq. 9-79 can be combined by defining

$$(V_n')^2 = V_{n1}^2 + V_{n2}^2. \tag{9-80}$$

Equation 9-79 can then be rewritten as

$$V_{nt} = [4kTB(R_{s1} + R_{s2}) + (V_n')^2 + (I_{n1}R_{s1})^2 + (I_{n2}R_{s2})^2]^{1/2}. \tag{9-81}$$

Although the voltage sources have been combined, the two noise current sources are still required in Eq. 9-81. If, however, $R_{s1} = R_{s2}$, which is usually the case since this minimizes the dc output offset voltage due to input bias current, then the two noise current generators can be combined by defining

$$(I_n')^2 = I_{n1}^2 + I_{n2}^2. \tag{9-82}$$

For $R_{s1} = R_{s2} = R_s$, Eq. 9-81 reduces to

$$V_{nt} = [8kTBR_s + (V_n')^2 + (I_n'R_s)^2]^{1/2}. \tag{9-83}$$

The equivalent circuit for this case is shown in Fig. 9-18C. To obtain optimum noise performance (maximum signal-to-noise ratio) from an op-amp, the total equivalent input noise voltage V_{nt} should be minimized.

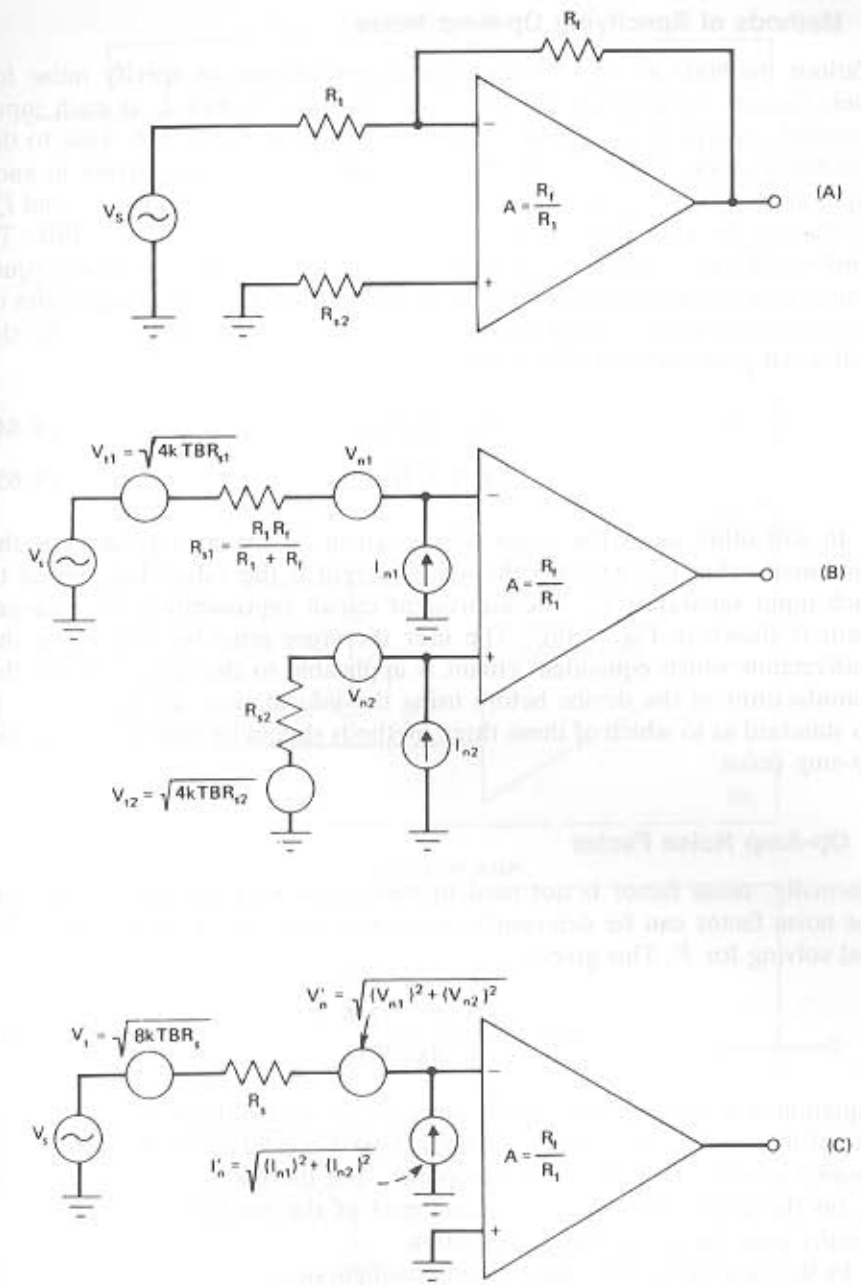

Figure 9-18. *(A) Typical op-amp circuit; (B) Circuit of A with noise sources added; (C) Circuit of B with noise sources combined at one terminal for the case $R_{s1} = R_{s2} = R_s$.*

Methods of Specifying Op-Amp Noise

Various methods are used by op-amp manufacturers to specify noise for their devices. Sometimes they provide values for V_n and I_n at each input terminal, as represented by the equivalent circuit in Fig. 9-19A. Due to the symmetry of the input circuit, the noise voltage and noise current at each input are equal. A second method is to provide combined values, V'_n and I'_n, which are then applied to one input only, as shown in Fig. 9-19B. To combine the two noise current generators, it must be assumed that equal source resistors are connected to the two input terminals. The magnitudes of the combined noise voltage generators in Fig. 9-19B, with respect to the individual generators in Fig. 9-19A, are

$$V'_n = \sqrt{2}V_n\,, \tag{9-84}$$

$$I'_n = \sqrt{2}I_n\,. \tag{9-85}$$

In still other cases the noise voltage given by the manufacturer is the combined value V'_n, whereas the noise current is the value that applies to each input separately I_n. The equivalent circuit representing this arrangement is shown in Fig. 9-19C. The user therefore must be sure he or she understands which equivalent circuit is applicable to the data given by the manufacturer of the device before using the information. To date, there is no standard as to which of these three methods should be used for specifying op-amp noise.

Op-Amp Noise Factor

Normally, noise factor is not used in connection with op-amps. However, the noise factor can be determined by substituting Eq. 9-83 into Eq. 9-26, and solving for F. This gives

$$F = 2 + \frac{(V'_n)^2 + (I'_n R_s)^2}{4kTBR_s}\,. \tag{9-86}$$

Equation 9-86 assumes the source noise is due to the thermal noise in just one of the source resistors R_s, not both. This is a valid assumption when the op-amp is used as a single-ended amplifier. The thermal noise in the resistor R_s on the unused input is considered part of the amplifier noise and is a penalty paid for using this configuration.

In the case of the inverting op-amp configuration, the noise due to R_s at the unused input may be bypassed with a capacitor. This is not possible, however, in the noninverting configuration, since the feedback is connected to this point.

A second method of defining the noise factor for an op-amp is to assume the source noise is due to the thermal noise of both source resistors ($2R_s$ in

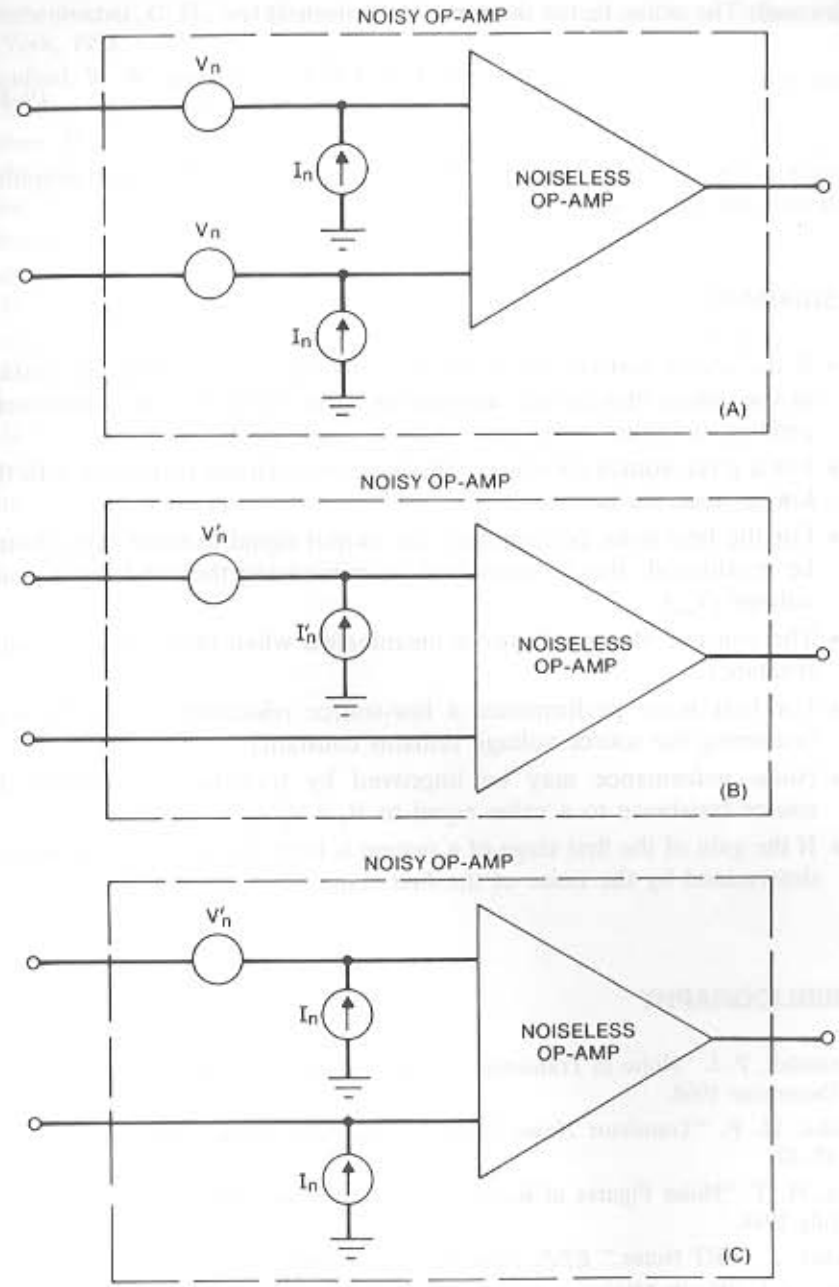

Figure 9-19. *Methods of modeling op-amp noise: (A) separate noise generators at each input; (B) noise generators combined at one input; (C) separate noise current generators with combined noise voltage generator.*

this case). The noise factor then can be written as

$$F = 1 + \frac{(V_n')^2 + (I_n' R_s)^2}{8kTBR_s} . \tag{9-87}$$

Equation 9-87 is applicable if the op-amp is used as a differential amplifier with both inputs driven.

SUMMARY

- If the source resistance is a variable and the source voltage a constant in the design of a circuit, minimizing noise factor does not necessarily produce optimum noise performance.
- For a given source resistance, the least noisy circuit is the one with the lowest noise factor.
- For the best noise performance the output signal-to-noise ratio should be maximized, this is equivalent to minimizing the total input noise voltage (V_{ni}).
- The concept of noise factor is meaningless when the source is a pure reactance.
- For best noise performance a low-source resistance should be used (assuming the source voltage remains constant).
- Noise peformance may be improved by transformer coupling the source resistance to a value equal to $R_s = V_n / I_n$.
- If the gain of the first stage of a system is high, the total system noise is determined by the noise of the first stage.

BIBLIOGRAPHY

Baxandall, P. J. "Noise in Transistor Circuits." *Wireless World*, vol. 74, November–December 1968.

Cooke, H. F. "Transistor Noise Figure." *Solid State Design*, February 1963, pp. 37–42.

Friis, H. T. "Noise Figures of Radio Receivers." *Proceedings of the IRE*, vol. 32, July 1944.

Gfeller, J. "FET Noise." *EEE*, June 1965, pp. 60–63.

Graeme, J. "Don't Minimize Noise Figure." *Electronic Design*, January 21, 1971.

Haus, H. A., et al. "Representation of Noise in Linear Twoports." *Proceedings of IRE*, vol. 48, January 1960.

Letzter, S., and Webster, N. "Noise in Amplifiers." *IEEE Spectrum*, vol. 7, no. 8, August 1970, pp. 67–75.

Motchenbacher, C. D., and Fitchen, F. C. *Low-noise Electronic Design*. Wiley, New York, 1973.

Mumford, W. W., and Scheibe, E. H. *Noise Performance Factors in Communication Systems*. Horizon House, Dedham, Mass., 1968.

Nielsen, E. G. "Behavior of Noise Figure in Junction Transistors." *Proceedings of the IRE*, vol. 45, July 1957, pp. 957–963.

Robe, T. "Taming Noise in IC Op-Amps." *Electronic Design*, vol. 22, July 19, 1974.

Robinson, F. N. H. "Noise in Transistors." *Wireless World*, July 1970.

Rothe, H., and Dahlke, W. "Theory of Noisy Fourpoles." *Proceedings of IRE*, vol. 44, June 1956.

Trinogga, L. A., and Oxford, D. F. "J.F.E.T. Noise Figure Measurement." *Electronic Engineering*, April 1974.

van der Ziel, A. "Noise in Solid State Devices and Lasers." *Proceedings of the IEEE*, vol. 58, August 1970.

van der Ziel, A. *Noise in Measurements*. Wiley, New York, 1976.

Watson, F. B. "Find the Quietest JFETs." *Electronic Design*, November 8, 1974.

10 DIGITAL CIRCUIT NOISE AND LAYOUT

Until recently, designers of digital systems did not give much consideration to electromagnetic compatibility in their designs. Computer systems were large and expensive and were used in large businesses. Today the microprocessor has changed all that. Digital electronics are proliferating and are commonplace in small businesses, homes, and even toys. Therefore digital-system designers can no longer ignore electromagnetic compatibility in their designs.

Recognizing the interference potential of digital electronics, the FCC imposed regulations that limit emissions from digital electronics marketed in the United States (see Chapter 1). Similar regulations exist in other countries.

Digital design takes place in the world of pure mathematics where equations describe the functions being implemented. Often, however, even if the logic is correct, these designs may not work after they are built because of noise. If they do work, the product may still not be legally marketable because of emission problems. Therefore the practical aspects of noise and emission control must be considered during the early design, layout, and testing stages of a product.

A digital system is also a radio-frequency (rf) system with noise and interference potential. Although most digital designers are knowledgeable about the subject of digital design, they are not always well-equipped to handle the design and analysis of rf systems, which is exactly what they are designing.

In addition many analog-circuit designers are now designing digital circuits, and they do not realize that different techniques are required for grounding, power distribution, and interconnection. For example, although a single-point ground may be desirable in an analog circuit, it may be the primary source of noise coupling and emission in a digital circuit.

Small integrated circuit digital logic gates, which draw only a few milliamperes of direct current, do not at first seem to be a serious source of noise. However, their high switching speed, combined with the inductance of the conductors that interconnect them, makes them a major source of noise. The voltage (V) generated when current changes through an inductor is

$$V = L\frac{di}{dt}, \qquad (10\text{-}1)$$

where L is the inductance and di/dt is the rate of change of current. For example, a typical logic gate may draw 5 mA from the dc supply in the "on" state and 1 mA in the "off" state. This is a current change of only 4 mA, but it may take place in 2 ns. If the power-supply wiring has an inductance of 500 nH, the noise voltage generated across the power-supply wiring when this one gate changes state will, by Eq. 10-1, be 1V. Multiplying this by the many gates in a typical system, and realizing that the typical supply voltage for such a system may only be 5V, shows that this can be a major noise source. Noise voltages occur on the ground, power, and signal conductors of the system.

Chapters 10 and 11 cover theory and design techniques intended to minimize (1) internal noise generation, (2) radiated emission, and (3) susceptibility of digital circuits. In digital circuits, minimizing one of these problems normally minimizes them all.

FREQUENCY VERSUS TIME DOMAIN

Digital-circuit designers think in terms of the time domain. Considering noise, however, it is better to think in terms of the frequency domain, because legal requirements on the emission from such systems are usually specified in the frequency domain, as are the characteristics of interference-control components, such as filters and shields.

The harmonic content of a square wave extends out to infinity. However, there is a point beyond which the energy content in the harmonics is negligible and can usually be ignored. This point is considered to be the bandwidth of the logic pulse and occurs at the break point where the Fourier coefficients start to decay at 40 dB/decade, instead of 20 dB/decade (as discussed in Chapter 11). Therefore the bandwidth of a digital system can be

Table 10-1 Rise/Fall Time and Bandwidth of Various Logic Families

Logic Family	Rise/Fall Time (ns)	Bandwidth (MHz)
CMOS	50	6.3
TTL	10	32
HCMOS	9	32
LSTTL	5	64
ALS	4	80
ACL	3	106
FAST	3	106
AS	2	159
ECL(10K)	2	159
ECL(100K)	1	318

related to the pulse rise time (t_r) by the following equation:

$$BW = \frac{1}{\pi t_r}. \tag{10-2}$$

For example, a rise time of 2 ns is equivalent to a bandwidth of 159 MHz. Table 10-1 lists typical rise/fall times, as well as the bandwidth ($1/\pi t_r$), for various digital logic families.

ANALOG VERSUS DIGITAL CIRCUITS

In an analog circuit a small amount of external noise coupled into the circuit can cause interference. This occurs in circuits operating at very low signal levels (millivolts or microvolts) and/or those containing high-gain amplifiers.

In contrast, digital circuits do not contain amplifiers, and they operate at relatively large signal levels, compared to analog circuits. The minimum worst-case noise margin for LSTTL circuits is typically 400 to 600 mV. For CMOS circuits the noise margin is even greater: about 0.3 times the V_{cc} voltage, or 1.5 V for a 5 V supply. Therefore digital circuits have an inherent immunity to low-level noise pickup.

DIGITAL LOGIC NOISE

In analog circuits external noise sources are usually the primary concern. In digital circuits, the internal noise sources are the major concern. Internal noise is the result of the following: (1) ground bus noise, (2) power bus noise, (3) transmission line reflections, and (4) crosstalk. The most important of these, ground and power bus noises, are covered in this chapter. Crosstalk was covered in Chapter 2, and reflections are covered in most good books on digital logic design, such as Blakeslee (1979) or Barna (1980), and will not be covered here.

Noise problems in digital circuits normally manifest themselves as marginal performance. The performance or error rate may vary with different combinations of ICs switching. Since in a complex system it is impossible to test all combinations of gates switching, a noise problem may not be detected during laboratory tests. To guarantee reliable operation, it is not enough to have the circuit tested in the laboratory. In addition one must ensure that proper layout and wiring practices were followed in the design. This can best be demonstrated by measuring noise voltages within the system. Measurements should be made of the differences in ground voltage between various points in the system, and V_{cc}-to-ground voltages should be measured on the power-supply pins of all the IC's. These voltages can then be compared to an acceptable noise-voltage objective that will be covered later in this chapter.

INTERNAL NOISE SOURCES

Figure 10-1 shows a simplified digital logic circuit consisting of four gates. Consider what happens when the output of gate 1 switches from high to low. Before gate 1 switches, its output is high, and the stray capacitance of the wiring between gates 1 and 2 is charged to the supply voltage. When gate 1 switches, the stray capacitance must be discharged before the low can be transmitted to gate 3. Therefore a large transient current flows through the ground system to discharge this stray capacitance. As a result of ground inductance this current produces a noise voltage pulse at the ground terminals of gates 1 and 2. If the output of gate 2 is low, this noise pulse will be coupled to the input of gate 4, as shown in Fig. 10-1, possibly causing gate 4 to switch. The only practical way to decrease the magnitude of the ground noise voltage is to decrease the inductance of the ground system.

The discharge path from the stray capacitance through the output of gate 1 and the ground conductors contains very little resistance. It forms a high-Q series-resonant circuit that is likely to oscillate, causing the output voltage of gate 1 to go negative as shown in Fig. 10-2A. The Q (or gain at resonance) of a series-resonant circuit is equal to

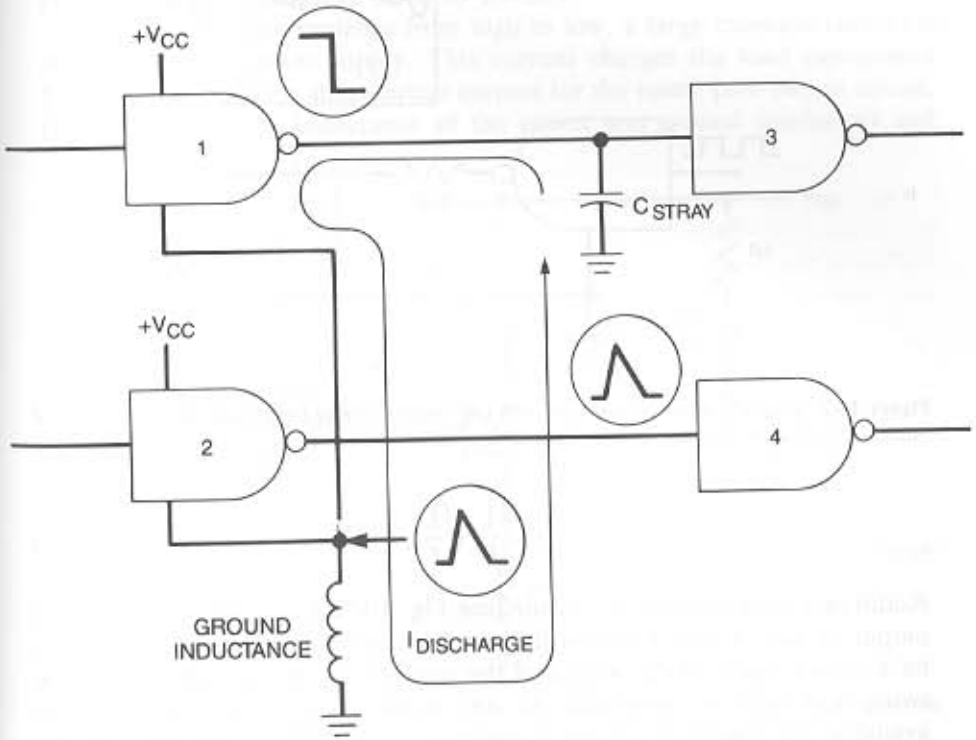

Figure 10-1. *Noise generation when output of gate 1 switches from high to low.*

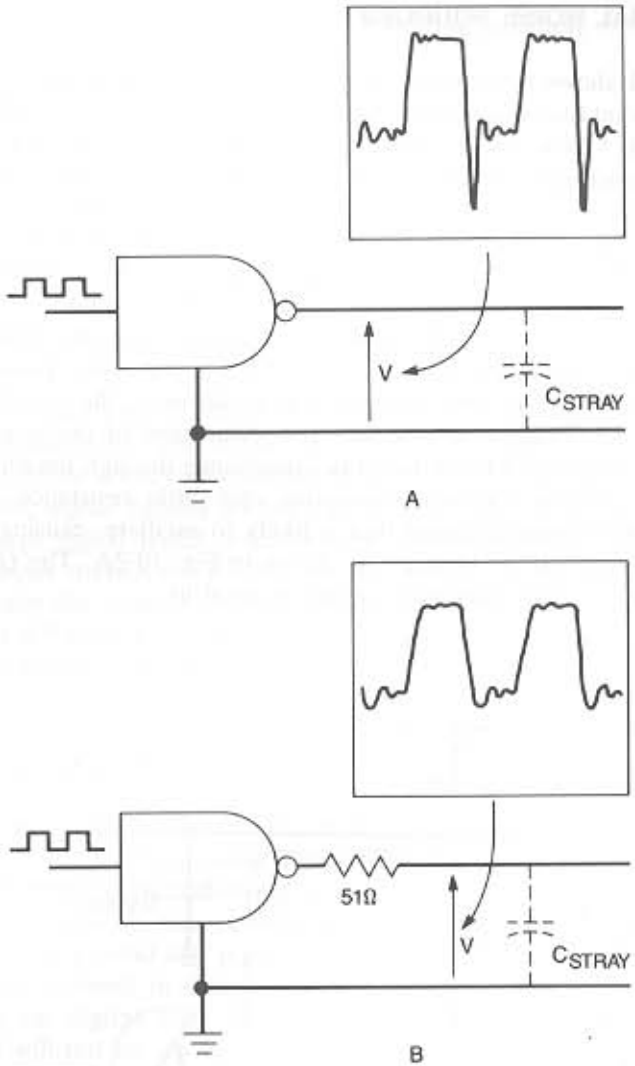

Figure 10-2. *Output voltage waveshapes with (A) ringing due to stray capacitance and ground inductance, and (B) ringing damped by output resistor.*

$$Q = \frac{1}{R}\sqrt{\frac{L}{C}}. \tag{10-3}$$

Additional damping with a resistor (see Fig. 10-2B), or ferrite bead, in the output of gate 1 will decrease this ringing. Another approach is to use a back-biased diode in the output of the gate, to clamp the negative voltage swing and limit its amplitude to one diode drop. If both options are available, the damping resistor is preferred. When the resistor is used, the

currents are reduced, and the unwanted energy is dissipated as heat and eliminated as a source of noise. When the diode is used, high currents must flow through it, which may cause additional noise problems.

A second source of noise in digital logic can be seen in Fig. 10-3. It shows a typical schematic of a logic gate with a totem pole output circuit (transistors $Q3$ and $Q4$). When the input is grounded, transistor $Q1$ turns on, which turns transistors $Q2$ and $Q4$ off. Transistor $Q3$ is then driven on by the current through $R2$. Transistor $Q3$ amplifies this current and provides the charging current for the load capacitance C_{stray}, limited only by resistor $R4$. For fast switching, $R4$ must be a small resistor (typically 50 to 150 Ω).

The charging path for the load capacitance C_{stray} is a series-resonant circuit from the power supply through resistor $R4$, transistor $Q3$, and the load capacitor to ground. It does not have a serious ringing problem since resistor $R4$ is in the circuit and provides damping.

The totem pole output causes one of the primary noise problems associated with logic devices. When the output is in "1" state, transistor $Q3$ is on and $Q4$ is off. Conversely, when the output is in "0" state, transistor $Q3$ is off and $Q4$ is on. Both of these states provide a high impedance between V_{cc} and ground. However, when the gate is switching, there is a short time during which both transistors $Q3$ and $Q4$ are on. This overlap results in a low-impedance connection between the power supply and ground, and a power-supply current spike of 30 to 100 mA.

When a logic gate switches from high to low, a large transient current is drawn from the power supply. This current charges the load capacitance C_{stray} and provides the short-circuit current for the totem pole output circuit. It flows through the inductance of the power and ground conductors and

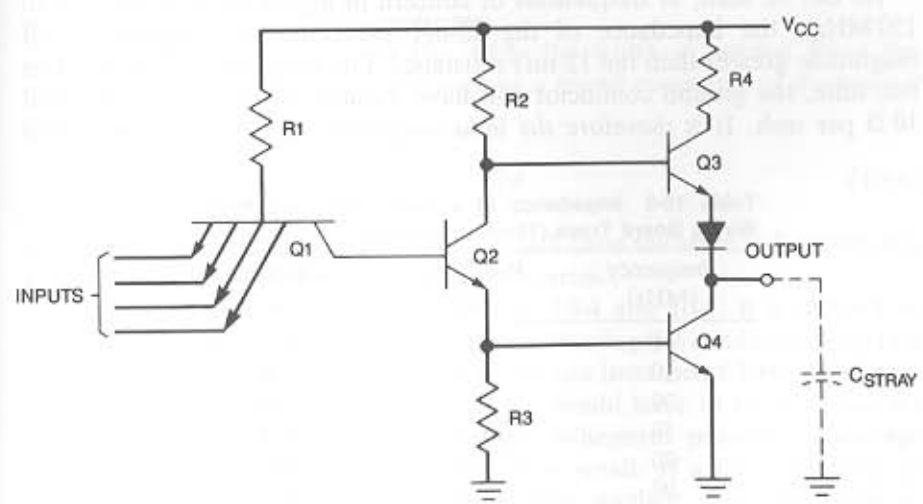

Figure 10-3. *Basic gate schematic for transistor-transistor logic (TTL): totem pole output configuration.*

causes a large transient drop in the supply voltage. The solution is to provide a source of charge (a capacitor) near each gate that would supply the transient current without drawing it through the inductance of the power and ground conductors.

To minimize the noise generated by these internal noise sources, all digital logic systems must be designed with:

1. A low inductance ground system,
2. A source of charge near each logic gate.

DIGITAL CIRCUIT GROUND NOISE

Ground noise is more of a problem than power-supply noise. The ground noise is produced by both transient power-supply currents and signal-return currents. The power-supply transients can be controlled by proper use of decoupling capacitors, but the signal currents in the ground cannot be decoupled or bypassed.

Transient ground currents are a primary source of both intrasystem noise voltages, and conducted and radiated emissions. To minimize the noise from transient ground currents, the impedance of the ground must be minimized. A typical printed wiring board conductor (0.02 in. wide with a return conductor on the other side of the board) has a resistance of 12 mΩ per inch, a capacitance of 2 pF per inch, and an inductance of 15 nH per inch. The impedance of the 15-nH inductance versus frequency which is related to the pulse rise/fall time by Eq. 10-2 is given in Table 10-2.

As can be seen, at frequencies of concern in digital logic circuits (10 to 150 MHz), the impedance of the 15-nH inductance is many orders of magnitude greater than the 12-mΩ resistance. For a digital signal with a 3-ns rise time, the ground conductor will have an inductive reactance of about 10 Ω per inch. It is therefore *the inductance that is of most concern when*

Table 10-2 Impedance of a One Inch Long Printed Wiring Board Trace (15-nH Inductance).

Frequency (MHz)	Rise Time (ns)	Impedance (Ω)
1	318	0.1
10	31.8	1.0
30	10.6	2.8
50	6.4	4.7
70	4.5	6.6
90	3.5	8.5
110	2.9	10.4
160	2.0	15.0

laying out a digital printed wiring board. If the ground-circuit impedance is to be minimized, the inductance must be reduced by an order of magnitude or more.

Minimizing Inductance

To control inductance, it is helpful to know how it depends on the physical properties of the circuit.

Inductance is directly proportional to the length of a conductor. This can be used to advantage by minimizing the lengths of critical leads carrying large transient currents, such as clock leads and line or bus drivers. This is not a universal solution because in a large system some leads must be long. This points out one of the advantages of large scale integration (LSI): by putting a large amount of circuitry on a single IC, the length and inductance of the interconnecting leads are minimized.

Inductance is inversely proportional to the log of the conductor diameter, or the width of a flat conductor. For a single round conductor located above a current-return path, the inductance is equal to

$$L = 0.005 \ln\left(\frac{4h}{d}\right) \quad \mu\text{H/in.}, \tag{10-4}$$

where the wire diameter is d and the height above a current-return path is h. For a flat conductor, such as on a printed wiring board, the inductance is

$$L = 0.005 \ln\left(\frac{2\pi h}{w}\right) \quad \mu\text{H/in.}, \tag{10-5}$$

where w is the width of the conductor.

If Eq. 10-4 is set equal to Eq. 10-5, the width w needed for a flat conductor to have the same inductance as a round conductor of diameter d can be determined. The result is

$$w = 1.57d. \tag{10-6}$$

Equation 10-6 shows that a flat conductor will have the same inductance as a round conductor if it has the same surface area.

Because of the log relationship in Eqs. 10-4 and 10-5, it is difficult to achieve a large decrease in inductance by increasing the conductor size. In a typical case, doubling the diameter or width (an increase of 100%) will only decrease the inductance by 20%. The size would have to be increased by 500% for a 50% decrease in inductance. Whenever possible, advantage should be taken of this effect, even if it is small. If a large decrease in inductance is needed, however, some other method must be found to achieve it.

Another method for decreasing the inductance of a circuit is to provide

alternative paths for current flow. These paths must be electrically, but not necessarily physically, parallel. If two equal inductances are parallel, the equivalent inductance will be one-half that of one, neglecting mutual inductance. If four paths are parallel, the inductance will be one-quarter. Since inductance is inversely proportional to the number of parallel paths, this is an effective method of decreasing inductance.

Mutual Inductance

When two conductors are parallel, the effect of the mutual inductance must be considered in calculating the total inductance. The total inductance (L_t) of two parallel conductors carrying current in the *same* direction can be written as

$$L_t = \frac{L_1 L_2 - M^2}{L_1 + L_2 - 2M}, \tag{10-7}$$

where L_1 and L_2 are the self-inductance of the two conductors and M is the mutual inductance between them. If the two conductors are identical (L_1 is equal to L_2), and Eq. 10-7 can be rewritten as

$$L_t = \frac{L_1 + M}{2}. \tag{10-8}$$

Equation 10-8 shows that the mutual inductance limits the overall reduction in inductance from parallel inductors. If the inductors are close together (tightly coupled), the mutual inductance approaches the self-inductance ($L_1 = M$), and the overall inductance is equal to the original inductance of a single conductor.

If the conductors are spaced far apart (loosely coupled), the mutual inductance becomes negligible, and the total inductance is one-half the original inductance of a single conductor. The effect of conductor spacing on mutual inductance must therefore be determined.

The mutual inductance between two parallel conductors separated by a distance D and located at a height h above a ground plane (Mohr 1967) is

$$M = 0.0025 \ln\left[1 + \frac{(2h)^2}{D^2}\right] \quad \mu\text{H/in.} \tag{10-9}$$

The effect of spacing on the inductance of parallel conductors can be determined from Eqs. 10-4, 10-8, and 10-9. The result is shown in Fig. 10-4 for two 26-gauge conductors. If the conductors are spaced at least twice their diameter apart, inductance will decrease about 25%. If the conductors are spaced a few tenths of an inch or more apart, the reduction will approach 50%. Spacings greater than 0.5 in. will not produce significant additional decreases in inductance. Therefore, for conductors placed a few tenths of an inch or more apart, the mutual inductance is negligible.

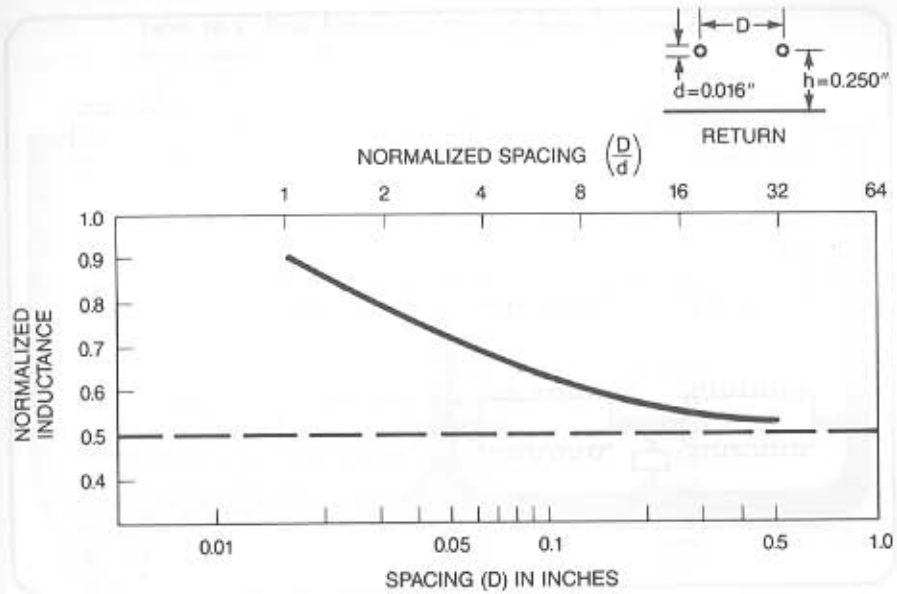

Figure 10-4. *Effect of spacing on inductance of parallel conductors carrying current in the same direction. Inductance is normalized to that of a single conductor.*

Practical Digital Circuit Ground Systems

A practical high-speed digital circuit ground system *must* provide a low-impedance (low inductance) connection between all possible combinations of ICs that communicate with each other. The most practical way to do this is to provide as many alternative (parallel) paths as possible. An additional alternative path, even a narrow one, is better than no path at all. If this concept is taken to its limit, the result is an infinite number of parallel paths. This is approached by using a complete ground plane. Although a ground plane will provide optimum performance, its use may not be desirable because of the large board area required or the added expense of a multilayered board.

An almost equally effective method of reducing inductance is to use a gridded ground system. This consists of running both horizontal and vertical ground paths on a printed wiring board as shown in Fig. 10-5. An acceptable grid size would be a spacing of 0.5 in., although good performance can be obtained with much larger spacings of 1.5 to 2.0 in. A good rule to follow is to use a grid size whose spacing falls between every IC on the board. This approach provides the necessary multiple-ground return paths between ICs. A grid can be used on even the most crowded boards, provided the wiring board is double sided. Vertical ground traces can be printed on one side of the board and horizontal traces on the other side. These traces are then connected where they cross with plated-through holes. This arrangement leaves ample room for all the necessary signal interconnections.

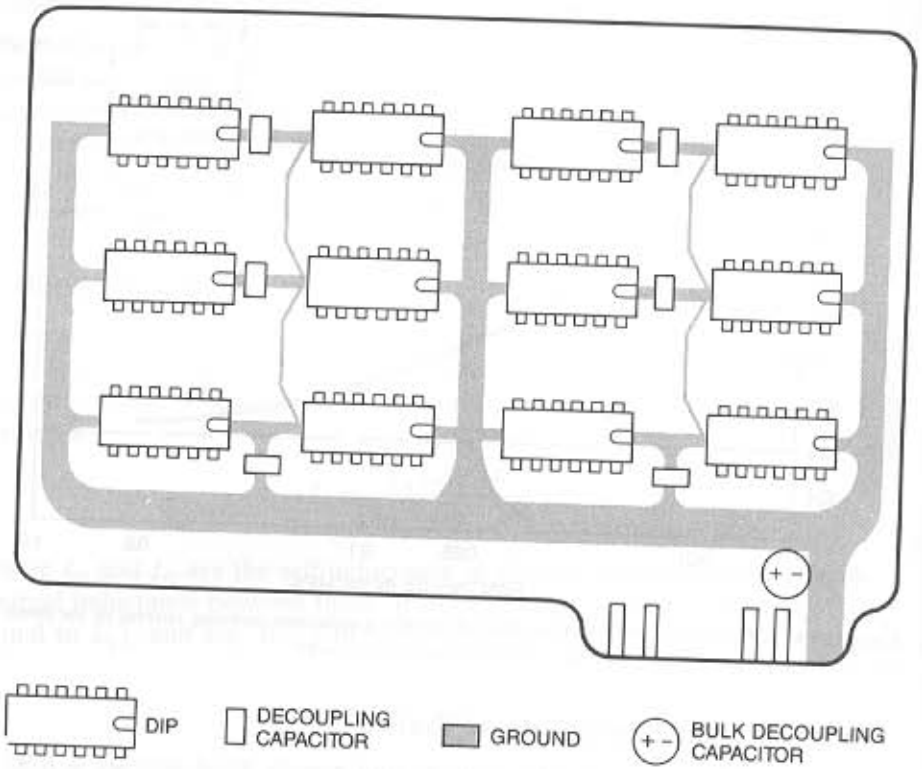

Figure 10-5. *A grid-type ground on a printed wiring board.*

A satisfactory grid can be achieved even on a crowded board with a little extra effort when the board is laid out. It is important to put the ground grid on the board first, before locating the signal paths. Although not impossible, it is difficult to place the grid on the board once the signal conductors are laid out. The ground grid adds no per-unit production costs to the product and is therefore a cost-effective noise suppression technique.

Although the primary ground-distribution paths should be made with wide conductors, which are necessary to handle the dc current, the ground grid can be closed with narrow conductors, since each added conductor provides many additional parallel paths to the ground. This fact is important, for people may be reluctant to use narrow conductors as part of the ground system.

A grid can reduce the ground-noise voltage by an order of magnitude or more over that of a single-point ground. For example, the data in Table 10-3 (from German 1985) show the ground-noise voltage measured between ground pins of various ICs on identical printed wiring boards, with identical component placements with and without a ground grid. In this case the maximum ground-voltage differential decreased from 1000 to 250 mV, and

Table 10-3 Peak Differential Ground Noise Voltages (mV) (from German, 1985)

Measurement Locations	Single-Point Ground	Ground Grid
IC1–IC2	150	100
IC1–IC3	425	150
IC1–IC4	425	150
IC1–IC5	450	150
IC1–IC6	450	150
IC1–IC7	450	150
IC1–IC8	425	225
IC1–IC9	400	175
IC1–IC10	400	150
IC1–IC11	625	200
IC1–IC12	400	150
IC1–IC13	425	250
IC14–IC11	900	200
IC15–IC7	850	125
IC15–IC10	900	125
IC15–IC16	1000	100
IC2–power[a]	300	100
Interface–head[a]	900	100
Head–IC2[a]	625	100
IC2–interface[a]	500	125
Head–power[a]	800	75

[a]Power, head, and interface are ground pins on connectors.

the voltage between grounds on IC15 and IC16 decreased from 1000 to 100 mV, an order of magnitude improvement.

A ground system with an appropriate grid will provide predictable results, with ground-noise voltages only slightly greater than those obtained with a full ground plane. The grid will occupy only a small percentage of the total board area.

The ground system is the foundation of a digital logic printed wiring board. If the ground system is poor, it is difficult to remedy the situation, short of starting over and designing the ground properly. Therefore *all digital printed wiring boards must have either a ground plane or a ground grid.*

Loop Area

Another important method of reducing inductance is to minimize the area of the loop enclosed by the current flow. Two conductors with current in *opposite* directions (e.g., a signal lead and its ground return lead) have a total inductance L_t equal to

$$L_t = L_1 + L_2 - 2M \,, \tag{10-10}$$

where L_1 and L_2 are the self-inductance of the individual conductors and M is the mutual inductance between them. If the two conductors are identical, Eq. 10-10 reduces to

$$L_t = 2(L_1 - M)\,. \tag{10-11}$$

To minimize the total inductance of the complete current path, the mutual inductance between the conductors must be maximized. Therefore the two conductors should be placed as close together as possible to minimize the area between them.

If the coefficient of magnetic coupling k between the two conductors were unity, the mutual inductance would be equal to the self-inductance, since

$$M = k\sqrt{L_1 L_2}\,, \tag{10-12}$$

and the total inductance of the closed loop would be zero. At high frequencies a coaxial cable approaches this ideal condition.

Placing forward and return current paths close together is an effective way of reducing inductance. This can be done with a tightly twisted pair or a coaxial cable. With these configurations inductances of less than 1 nH/in. are possible.

What is the loop area for a system containing multiple-ground return paths? The area of interest is the total area enclosed by the actual current flow (Ott, 1979). An important consideration therefore is the ground path taken by the current in returning to the source. Often this is not the path intended by the designer. Additional information on the concept of inductance of cables and conductors is given by Skilling (1951) and Rostek (1974).

POWER DISTRIBUTION

Ideally the power distribution layout should be the same as, and parallel to, the ground system. From a practical point of view this is not always possible or necessary. Since power-supply noise can be controlled by the proper use of decoupling capacitors, a power grid (or power plane) distribution system is not as important as a proper ground system. If a compromise is necessary, it is better to use the valuable board space to provide the best ground system possible and control power-supply noise by other means.

Power-Supply Decoupling

Even if one starts with the best possible ground layout, there is still a problem, as shown in Fig. 10-6A. When the logic gate switches, there is a current transient dI that occurs on the power-supply lead. This current transient flows through the ground and power system. The ground induct-

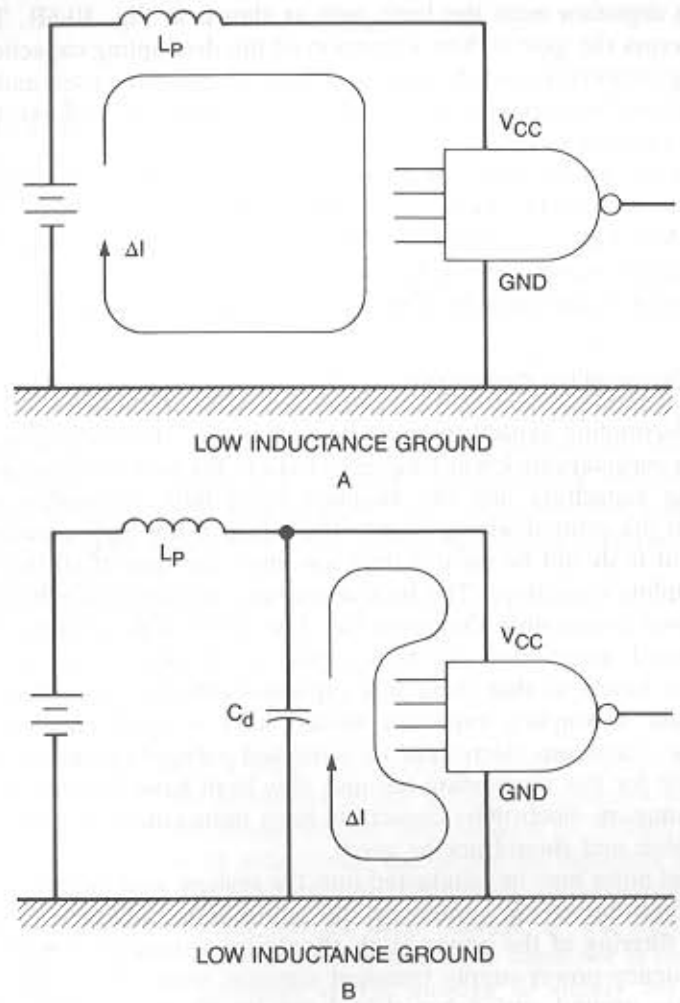

Figure 10-6. *Transient power supply current with (B) and without (A) a decoupling capacitor.*

ance has already been minimized, as much as possible. The major problem now is the voltage drop that occurs across the inductance L_p of the power-supply line. The transient current flowing through this inductance produces a large noise voltage that appears at the V_{cc} terminal of the logic gate.

The magnitude of the power-supply voltage transient can be reduced by decreasing the inductance L_p and/or decreasing the transient current flowing through the inductance. The inductance can be minimized by using a power plane or grid, as in the case of the ground system. The transient current can be minimized or eliminated by supplying the current from another source,

such as a capacitor near the logic gate as shown in Fig. 10-6B. The noise voltage across the gate is then a function of the decoupling capacitor C_d and the wiring between it and the gate. The type of capacitor used and its value and placement with respect to the IC are all important in determining the capacitor's effectiveness.

Even when a power grid or plane is used, decoupling capacitors are still required to control the radiated emission from the transient power-supply current. As Chapter 11 will show, the radiated emission is proportional to the loop area enclosed by the transient current. It can be seen in Fig. 10-6 that this area is considerably reduced when decoupling capacitors are used.

Bulk Decoupling Capacitor

The IC decoupling capacitors must be recharged. The recharging currents occur at a considerably lower frequency than in the case of the individual IC decoupling capacitors and are supplied by a bulk decoupling capacitor located on the printed wiring board. The value of the bulk capacitor is not critical, but it should be greater than ten times the sum of all the values of the decoupling capacitors. The bulk decoupling capacitor should be located where power comes onto the board (see Fig. 10-5). If more than 20 ICs are on the board, more than one bulk capacitor should be used and located around the board so that there is a capacitor close to every 15 to 20 ICs.

The bulk decoupling capacitor should have a small equivalent series inductance. Tantalum electrolytic or metalized polycarbonate capacitors are appropriate for this application because they both have low internal inductance. Aluminum electrolytic capacitors have inductances an order of magnitude higher and should not be used.

External noise may be conducted into the system, and internal noise may be conducted out of the system on the power lines. Therefore the decoupling and filtering of the power leads should be a standard design practice. High-frequency power-supply transient currents should be confined to the digital logic printed wiring board and not be allowed to flow on the dc power-supply wiring. An additional inductor (1 to 10 μH) or a ferrite bead can be used on the "off-board" side of the bulk capacitor to minimize the transient power-supply currents in the off-board wiring, thereby reducing the radiated emission.

Decoupling Capacitor Type and Value

Decoupling capacitors must supply high-frequency (15–150 MHz) currents; therefore they should be low inductance, high-frequency capacitors. For this reason disk ceramic or multilayer ceramic capacitors are preferred.

The decoupling capacitor should be able to supply all the current required by an IC when it switches. The minimum value of the capacitor can be calculated by

$$C = \frac{dI\,dt}{dV}, \tag{10-13}$$

where dV is the transient voltage drop in the supply voltage caused by a current transient of dI occurring in time dt. For example, if an IC requires a transient current of 50 mA for 2 ns, and one wishes to limit the power-supply voltage transient to less than 0.1 V, the capacitor must have a value of at least 0.001 μF.

Most designers tend to use decoupling capacitors that are too large for the application. All capacitors have some inductance in series with their capacitance. The inductance is the result of the capacitor structure, the capacitor leads, and the external paths used to connect the capacitor to the IC terminals. Because of this combination of capacitance and inductance, the capacitor will, at some frequency, become self-resonant. At the self-resonant frequency the capacitor is a very low-impedance and an effective bypass. Above the self-resonant frequency the circuit becomes inductive, its impedance increases with frequency, and consequently it performs poorly as a decoupling capacitor.

The resonant frequency of a series L–C circuit is

$$f = \frac{1}{2\pi\sqrt{LC}}. \tag{10-14}$$

Consider the case of a 0.001 μF decoupling capacitor with an internal inductance of 1 nH. If the inductance of the wiring that connects it to the IC can be kept to 30 nH, the circuit will be self-resonant at 29 MHz.

For the same amount of inductance, the larger the capacitor value, the lower the self-resonant frequency will be. Therefore a decoupling capacitor larger than necessary should not be used because it will have a lower self-resonant frequency. On the other hand, if the capacitor is too small in value, it will not have sufficient charge storage to supply the transient current needed by the IC without an excessive drop in voltage. Therefore an optimum-value capacitor exists for every application.

Many experiments have been performed on 14- and 16-pin ICs to find the optimum value for this capacitor. Often the minimum noise voltage occurred with a 470- to 1000-pF capacitor. The best type (or value) of decoupling capacitor for a specific application can be found by measuring the noise voltage across the IC with the various types (or values) of capacitor being considered.

The smallest value capacitor that will do the job is the best choice. Seldom should a decoupling capacitor be larger than 0.01 μF, except in the case of some random-access memory (RAM) ICs which have large, instantaneous current demands during the refresh cycle.

In the case of a logic IC, only some of the gates switch at any one time (50% is a reasonable assumption). The decoupling capacitor must supply

current only to the gates that are switching. In the case of dynamic RAM ICs, however, all the cells are refreshed at the same time, and there are more cells in a RAM than there are gates in a logic IC. Current must be supplied to all these cells at the same time during the refresh cycle; therefore larger value decoupling capacitors are required for dynamic RAMS than logic ICs. Typically a 256-K dynamic RAM requires a 0.1 μF decoupling capacitor.

Decoupling Capacitor Placement

The decoupling capacitor must be placed as close to the IC as possible. If the ICs are lined up in a row as shown in Fig. 10-7, one capacitor can serve two packages. However, there must be short leads directly from the capacitor to each IC's power and ground terminal. Obviously the standard of placing power and ground pins diagonally opposite on an IC is the worst possible choice with respect to noise. Power and ground should be located on adjacent pins or on opposite pins on one end of the IC.

It is extremely important to minimize the inductance of the conductors between the IC and the decoupling capacitor. This inductance consists of three components as shown in Fig. 10-8: (1) the inductance of the capacitor itself, (2) the inductance of the traces connecting the capacitor to the IC, and (3) the inductance of the lead frame within the IC. If the proper type of capacitor is used, the internal inductance of the capacitor should be negligible compared to the other two components. The inductance of the IC lead frame is 10 to 15 nH for a 14- or 16-pin DIP. The printed circuit traces are usually the only parameters under the designer's control.

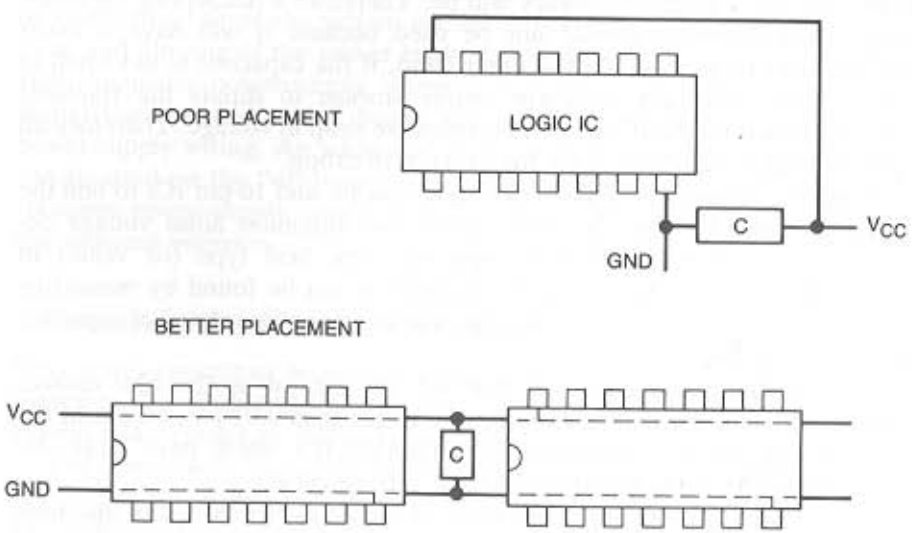

Figure 10-7. *Decoupling capacitor placement. The loop area between the capacitor and the IC must be kept small to decrease the inductance.*

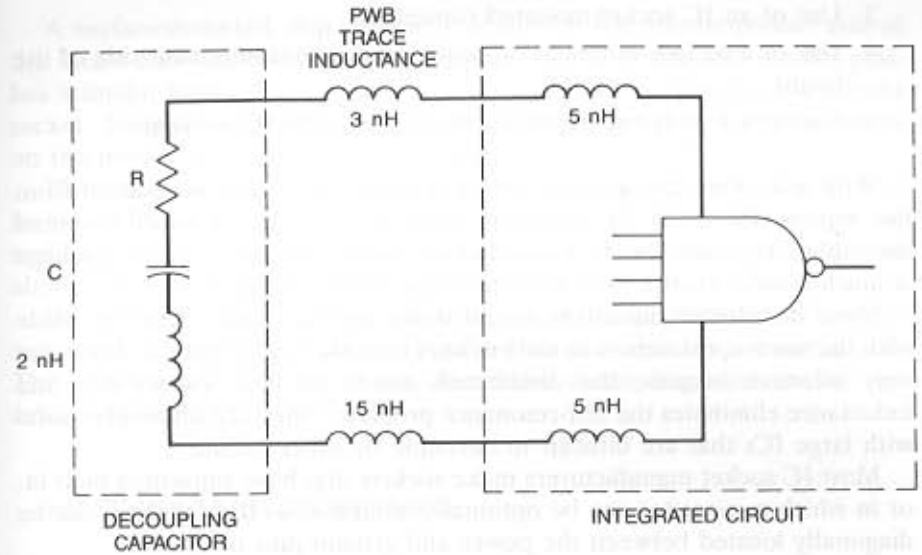

Figure 10-8. *Equivalent circuit for decoupling capacitor connected to an integrated circuit for the case of power and ground on diagonally opposite pins of the IC.*

The printed circuit traces should be as short as possible and should be placed as close together as possible to minimize the loop area. The total length of both conductors (power lead and ground lead) should be less than 1.5 in. Usually the minimum inductance is 25 to 30 nH, as shown in Fig. 10-8.

Figure 10-9 shows the impedance of various decoupling capacitors when in series with 30 nH of trace inductance. Also shown is the frequency range of importance for decoupling various logic families, the frequency ranges from the $1/\pi t_r$ frequency down to the fundamental of the clock frequency. Over this frequency range the impedance should be kept below 5 to 10 Ω. In the case of LSTTL logic, a 0.001 μF decoupling capacitor would be a good choice.

Alternative Decoupling Methods

For large ICs (24 to 40 pins) it is often difficult to find a way to mount a capacitor close enough to the IC to be effective. In these cases some other alternatives to the standard decoupling capacitor may be considered, and some new products have become available because of this problem. These alternatives are

1. Use of a different IC package configuration (e.g., a leadless chip carrier).
2. Use of a distributed capacitor that mounts under the IC.

3. Use of an IC socket-mounted capacitor.
4. Use of a surface-mounted capacitor on the noncomponent side of the board.
5. Use of a lead-frame capacitor molded into the IC package.

With a leadless chip-carrier, the lead-frame inductance is reduced from the typical 10 to 15 nH to about 4 nH. In addition a board-mounted decoupling capacitor can be located closer to the chip, since the IC package is much smaller than a DIP with the same number of leads.

Some distributed capacitors mount under the IC package and are made with the same construction as the bus bars discussed in Chapter 4. These are very effective because the distributed nature of their capacitance and inductance eliminates the self-resonance problem. They are especially useful with large ICs that are difficult to decouple by other means.

Most IC socket manufacturers make sockets that have capacitors built in, or in which a capacitor can be optionally mounted, so the capacitor can be diagonally located between the power and ground pins of the IC.

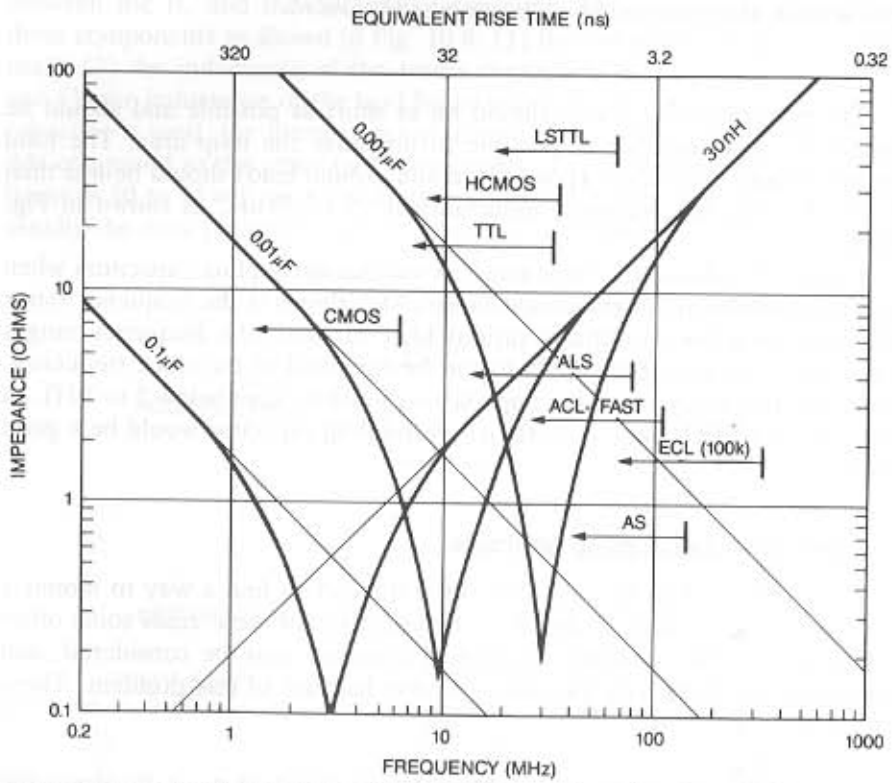

Figure 10-9. *Impedance of various value decoupling capacitors in series with 30 nH of inductance.*

A surface-mounted chip capacitor, placed on the noncomponent side of the board and located diagonally between the IC power and ground pins, has a similar effect as the capacitor in a socket; only it does not require the socket. Surface mounting greatly reduces lead inductance, takes less space on the printed wiring board, and increases circuit reliability.

The incorporation of a multilayer ceramic-chip capacitor in the IC lead frame and within the IC package eliminates most of the inductance associated with lead-frame and board interconnections, and it provides an almost ideal decoupling.

If satisfactory decoupling can be achieved by the standard method, which is less expensive, it should be used rather than the methods just mentioned. The effectiveness of some of the alternative decoupling methods are discussed in Danker (1985).

NOISE VOLTAGE OBJECTIVES

Since noise problems in digital logic produce marginal performance, proper operation of a lab model or prototype system is not enough to guarantee a reliable design. In addition to proper operation the following measurements should be made: (1) ground noise voltage and (2) power-supply noise voltage.

The best method for determining the quality of the power and ground system on a printed wiring board is to measure the peak-differential ground noise voltage between various points on the board, and also the V_{cc} to ground voltage on each IC.

Although many digital devices will work with ground noise differentials as large as 1 V (Motorola Application Note AN-707), operational margins and reliability may well be compromised. Therefore every effort should be made to limit the peak-differential ground voltage to 500 mV or less. Experience has shown that this can be achieved with a ground grid or plane. A well-designed grid system can hold the peak-differential ground noise voltages from 150 to 300 mV, even on boards containing high-speed Schottky logic.* A good ground plane will limit this voltage to 200 mV or less.

Digital logic families are more immune to noise on the dc power than they are to noise on the ground. A reasonable objective for peak noise voltage measured between power and ground on the IC is 500 mV. On large ICs (24 pins or more) it is sometimes difficult to position the decoupling capacitor close enough to the power and ground pins to achieve the 500 mV objective. In these cases one of the alternative methods of decoupling mentioned above may be useful.

*Although this voltage is low enough to prevent functional problems, it may not be low enough to control common-mode radiation from the system (see Chapter 11).

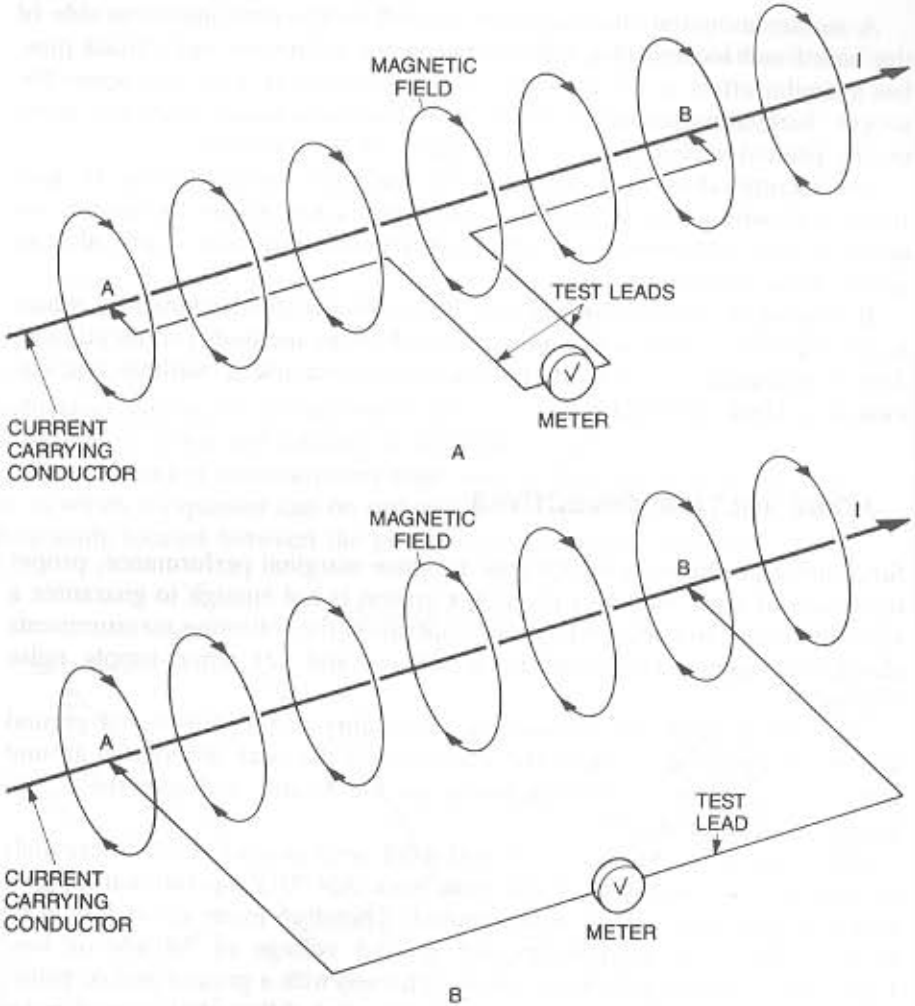

Figure 10-10. *Test set up to measure the voltage drop between points A and B on a current-carrying conductor. (A) Test leads parallel to current-carrying conductor pick up an error voltage due to the current-carrying conductor's magnetic field. (B) Test leads perpendicular to current-carrying conductor do not pick up an error voltage.*

MEASURING NOISE VOLTAGES

When measuring digital logic noise voltages consideration must be given to (1) the bandwidth of the measuring instrumentation, (2) the high-frequency common-mode rejection ratio (CMRR) of the instrumentation, and (3) the dress of the leads from the measuring instrument to the circuit under test.

Noise measurements must be made with a wide-bandwidth oscilloscope (100 MHz minimum, with 200 MHz preferred) and with a wide-bandwidth differential probe with a good high-frequency CMRR (100 to 1 at 100 MHz

or better; e.g., Tektronix P6046 Active Differential Probe). This type of differential probe has high common-mode rejection at high frequencies because it performs the common-mode rejection within the probe body and then transmits the signal back to the single-ended oscilloscope. Instrumentation with large bandwidth and large CMRR is required to measure the high-frequency components of the noise pulses.

Equal length leads should be connected to the two terminals of the differential probe. These leads should be dressed perpendicular to the circuit board to minimize the inductive coupling between the conductors on the board and the test leads (Paul, 1986; also Skilling, 1951, pp. 103–105). Figure 10-10 shows two methods of measuring the voltage between points *A* and *B* of a current-carrying conductor. Figure 10-10A shows an incorrect setup, and Fig. 10-10B, a correct one. When the test leads are run close to, and parallel with, the current-carrying conductor (Fig. 10-10A), the magnetic field from the conductor encircles the test leads, thereby coupling a voltage into the leads. When the leads are perpendicular to the conductor as in Fig. 10-10B coupling does not occur. Ideally the leads should be perpendicular to the conductor for a great distance, to minimize the coupling. Normally the test leads are routed perpendicular to the conductor for at least 5 cm.

If a differential probe is not available, measurements can be made with a wide-bandwidth, single-ended probe and scope, provided the circuit can be floated (with no ground connection) and powered from a battery. This way the only ground on the circuit will be the ground connection of the scope, and common-mode problems will be minimized. The routing of the test leads should be done in the way previously discussed.

UNUSED INPUTS

To prevent unintentional switching and noise generation, all unused inputs must be connected somewhere, and not left open. Otherwise, a floating input, picking up noise, may cause a gate to switch randomly. This connection is especially important for CMOS because of its high input impedance, but applies to other logic families as well. In addition, for CMOS circuits, an unused gate whose inputs are not connected may, because of noise, bias itself into the linear region and significantly increase the dc current drawn by the circuit. The unused inputs are normally connected to V_{cc} voltage through a series resistor, or to ground.

LOGIC FAMILIES

The principles discussed in this chapter are independent of logic families. They can be applied to TTL, STTL, LSTTL, CMOS, HCMOS, FAST, ALS, ACL, and ECL. The most important parameters are the rise/fall time

and the magnitude of the transient switching current. The faster the rise/fall time and the greater the transient current, the more important the principles discussed here are. For example, poor grounds and improper decoupling can often be tolerated, although they should not be encouraged, in the case of slow-speed CMOS when the rise/fall times are 30 to 50 ns. When rise times are under 10 ns, however, these principles are very important.

With the many different logic technologies available today, designers should resist the temptation to use the fastest logic available. Instead, the slowest- and lowest-power logic family that can do the job should be used, to minimize noise and interference.

SUMMARY

- Due to its high switching speed, digital logic can be a source of radiated and conducted emission.
- A properly functioning laboratory model does not guarantee a reliable noise-free circuit.
- Noise-voltage measurements must be made on the ground and power supply, to guarantee a reliable design.
- Digital systems require different techniques for grounding and power distribution than analog systems.
- With regard to noise control, the single most important consideration in the layout of a digital logic system is the minimization of the ground inductance.
- Ground inductance in digital systems can be minimized by using a ground plane or ground grid.
- Decoupling capacitors should be located next to each IC in the system.
- The smallest-value decoupling capacitor that will do the job is best.
- A bulk decoupling capacitor should be used to recharge the individual IC decoupling capacitors.
- Ground and power-supply noise voltages should be measured and should not exceed 500 mV.
- All unused inputs on digital logic gates must be connected to power or ground.

BIBLIOGRAPHY

Allan, A. "Noise Immunity Comparison of CMOS versus Popular Bipolar Logic Families." Motorola Application Note, AN-707, 1973.

Barna, A. *High Speed Pulse and Digital Techniques*. Wiley, New York, 1980.

Blakeslee, T. R. *Digital Design with Standard MSI and LSI*. 2nd ed. Wiley, New York, 1979.

Catt, I. "Crosstalk (Noise) in Digital Systems." *IEEE Transactions on Electronic Computers*, December 1967.

Danker, B. "New Methods to Decrease Radiation from Printed Circuit Boards." 6th Symposium on Electromagnetic Compatibility. Zurich, Switzerland, March 5–7, 1985.

German, R. F. "Use of a Ground Grid to Reduce Printed Circuit-Board Radiation." 6th Symposium on Electromagnetic Compatibility. Zurich, Switzerland, March 5–7, 1985.

Keenan, R. K. "Decoupling and Layout of Digital Printed Circuits." The Keenan Corp., Vienna, Va., 1985.

Mohr, R. J. "Coupling between Open and Shielded Wire Lines over a Ground Plane." *IEEE Transactions on Electromagnetic Compatibility*, vol. EMC-9, no. 2, September 1967, Appendix 1.

Motorola Semiconductor Application Note AN-707. "Noise Immunity Comparison of CMOS Versus Popular Bipolar Logic Families." Motorola, Inc., 1973.

Ott, H. W. "Ground—A Path for Current Flow." IEEE International Symposium on Electromagnetic Compatibility. 1979.

Ott, H. W. "Digital Circuit Grounding and Interconnection." IEEE International Symposium on Electromagnetic Compatibility. 1981.

Paul, C. R. "Modeling and Prediction of Ground Shift on Printed Circuit Boards." 1986 IERE Symposium on EMC. York, England, October 1986.

Rostek, P. M. "Avoiding Wiring Inductance Problems." *Electronic Design*, December 6, 1974.

Skilling, H. H. *Electric Transmission Lines*. McGraw-Hill, New York, 1951.

White, D. R. J. "EMI Control in the Design of Printed Circuit Boards and Backplanes." Don White Consultants, Germantown, Md., 1982.

11 DIGITAL CIRCUIT RADIATION

In today's regulatory environment, electromagnetic compatibility (EMC) engineering plays an important role in bringing digital electronic products to the market. Often the functional performance of a product is not the primary problem in meeting product introduction schedules; passing the required EMC emission test is.

Controlling the emission from digital systems cost-effectively can be as complicated and difficult as designing the digital logic itself. Emission control should be treated as a design problem from the start, and it should receive the necessary engineering resources throughout the design process.

This chapter models the radiation process and outlines the parameters on which radiation depends. It also provides a method for predicting the radiated emission as a function of the electrical characteristics of the signals and the physical properties of the system. Knowing the parameters that affect radiation helps to develop techniques to minimize it.

Radiation from digital electronics can occur as either *differential-mode* or *common-mode* radiation. Differential-mode radiation is the result of current flowing around loops formed by the conductors of the circuit, as shown in Fig. 11-1. These loops act as small antennas radiating magnetic fields. Although these signal current loops are necessary for circuit operation, their size and area must be controlled during the design process, in order to limit the radiation.

Common-mode radiation, on the other hand, is the result of undesired voltage drops in the circuit that cause some parts of the system to be at a common-mode potential above "true" ground. Often this is the result of voltage drops in the digital logic ground system. When external cables are then connected to the system, they are driven at this common-mode potential, forming antennas which radiate electric fields, as shown in Fig. 11-2. Since these undesired voltage drops are not intentionally designed into the system, common-mode radiation is harder to control than differential-mode radiation. During the design, steps must be taken to provide methods for handling the common-mode emission problem.

DIFFERENTIAL-MODE RADIATION

Differential-mode radiation can be modeled as occurring from a small loop antenna. For a small loop of area A carrying current I, the magnitude of the

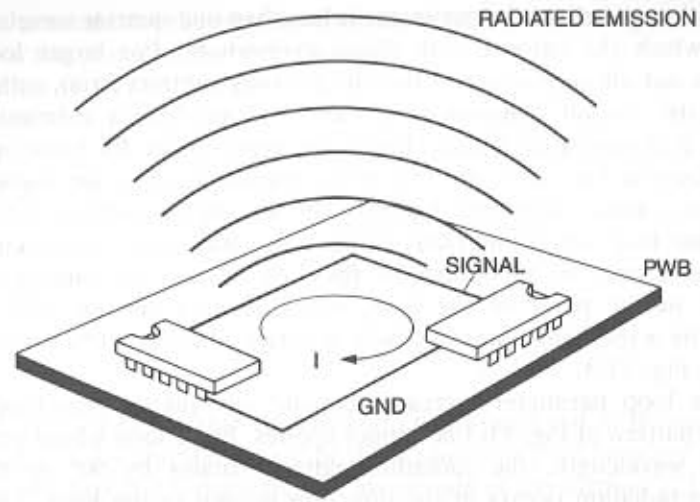

Figure 11-1. *Differential-mode radiation from printed wiring board (PWB).*

electric field E measured in free space at a distance r, in the far field, is equal to (Weeks 1964, p. 565, Eq. 91)

$$E = 131.6 \times 10^{-16}(f^2 A I)\left(\frac{1}{r}\right)\sin\theta\,, \tag{11-1}$$

where E is in volts/meter, f is in hertz, A is in square meters, I is in amperes, and r is in meters.

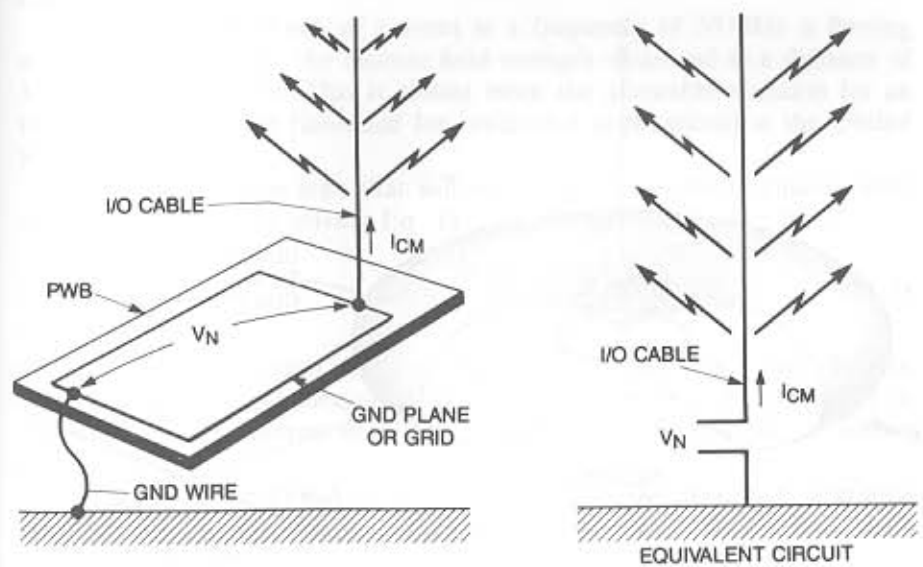

Figure 11-2. *Common-mode radiation from system cables.*

A small loop, where the perimeter is less than one-quarter wavelength, is one on which the current is in phase everywhere. For larger loops the current is not all in phase, and therefore it may subtract from, rather than add to, the overall emission. Equation 11-1 predicts a maximum field strength; it is accurate for small loops and approximate for large ones.

As shown in Fig. 11-3, the free-space antenna pattern for a small loop antenna is a torus (doughnut-shaped). The maximum radiation is from the sides of the loop and in the plane of the loop. Radiation nulls occur in the directions normal to the plane of the loop. Since the electric field is polarized in the plane of the loop, the maximum electric field will be detected by a receiving antenna which is polarized in the same direction, as shown in Fig. 11-3.

As the loop perimeter increases beyond one-quarter wavelength, the radiation pattern of Fig. 11-3 no longer applies. For a loop whose perimeter equals a wavelength, the radiation pattern rotates by 90° so that the maximum radiation occurs in the direction normal to the loop. Therefore the radiation nulls of the small loop become the maxima for a large loop.

Although Eq. 11-1 is derived for a circular loop, it can be used for any planar loop because, for small loops, the maximum radiation is insensitive to the shape of the loop and depends only on its area (Stutzman 1981, p. 99).

The first term in Eq. 11-1 is a constant that accounts for the properties of the transmission medium—in this case, free space. The second term defines the characteristics of the radiation source, that is, the loop. The third term represents the decay of the field as it propagates away from the source. The

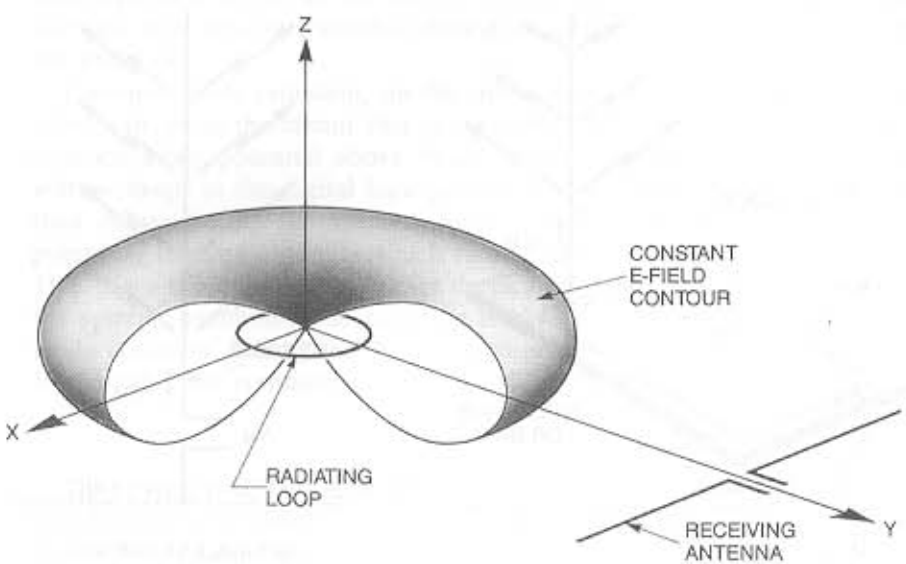

Figure 11-3. *Free-space radiation pattern for a small loop antenna.*

last term accounts for the angular orientation of the measuring antenna with respect to the plane of the radiating loop.

Equation 11-1 is for a small loop located in free space, with no reflecting surfaces nearby. Most measurements of radiation from electronic products, however, are made in an open field over a ground plane, not in free space. The extra ground reflection can increase the measured emission by as much as 6 dB. To account for this, Eq. 11-1 must be multiplied by a factor of two. Correcting for the ground reflection and assuming an orientation that maximizes emission, one can rewrite Eq. 11-1 as

$$E = 263 \times 10^{-16}(f^2 A I)\left(\frac{1}{r}\right). \tag{11-2}$$

Equation 11-2 shows that the radiation is proportional to the current (I) the loop area (A), and the square of the frequency (f). Therefore radiation can be controlled by (1) reducing the magnitude of the current, (2) reducing the frequency or harmonic content of the current, or (3) reducing the loop area. For a current waveform other than a sine wave, the Fourier series of the current must be determined before substitution into Eq. 11-2.

Loop Area

In the design of a digital system, the way to control differential-mode radiation is to minimize the area enclosed by current flow. This means placing signal leads and their associated ground-return leads close together. This is especially important for clock leads, backplane wiring, and interconnecting cables.

For example, if 25 mA of current at a frequency of 30 MHz is flowing around a 10-cm^2 loop, the electric field strength measured at a distance of 3 m will be 197 μV/m. This is almost twice the allowable emission for an FCC Class B product (intended for residential applications) in the United States.

The maximum loop area that will not exceed a specified emission level can be determined by solving Eq. 11-2 for the loop area (A). Thus

$$A = \frac{380 E r}{f^2 I}, \tag{11-3}$$

where E is the radiation limit in microvolts per meter, r is the distance between the loop and measuring antenna in meters, f is the frequency in megahertz, I is the current in milliamperes, and A is the loop area in square centimeters.

For example, for 25 mA of current at 30 MHz, the maximum loop area that will limit the radiation to 100 μV/m at a distance of 3 m (the FCC Class B limit) is 5 cm^2.

If we are to design systems that meet legal requirements for radiated

emission, loop areas must be kept very small. Under such conditions Eq. 11-2 is applicable for predicting the differential-mode radiated emission.

Loop Current

If the current in the loop is known, it is easy to use Eq. 11-2 to predict the radiation. However, the current is seldom known accurately; therefore it must be modeled, measured, or estimated. The current depends on the source impedance of the circuit that drives the loop, as well as the load impedance of the circuit that terminates the loop.

Loop current can be measured with a wide-band current probe. This may require adding a wire in series with a PCB trace, just long enough to clip a current probe to.

Figure 11-4 shows two models typically used to represent the loop and its termination. Figure 11-4A shows a loop with a shorted termination and Fig. 11-4B shows a loop terminated in a capacitor. Various other models are also possible (Keenan, 1983, p. 3.4-1).

A capacitor-loaded loop with zero source impedance is frequently assumed. Examples of this approach are given by Keenan (1984) and Bush (1985).

In this book we have modeled the logic gate as a current source—that is, as a shorted loop driven through the source resistance of the driving gate. For example, for the logic gate of Fig. 10-3 this would be resistor R4. If R4 equals 130 Ω, the peak current into the loop will be 5 V/130 Ω, or 38 mA. Since there will be some small voltage drop in the output transistors, a value of 35 mA is a reasonable value to use.

Fourier Series

Since digital circuits use square waves, the Fourier series of the currents must be known before calculating the emission using Eq. 11-2. For a symmetrical square wave (actually a trapezoidal wave, since the rise and fall

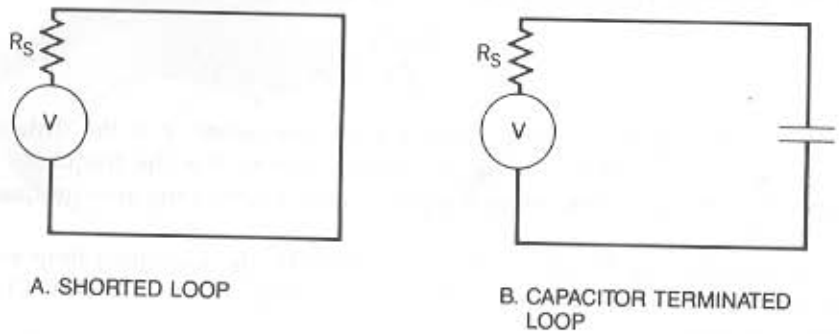

Figure 11-4. *Loop antenna configurations. (A) a shorted loop; (B) a capacitor-terminated loop.*

times are finite, as shown by the wave shape in Fig. 11-5) the current in the nth harmonic is given by (ITT, 1968, p. 42-13)

$$I_n = 2Id\,\frac{\sin(n\pi d)}{n\pi d}\,\frac{\sin(n\pi t_r/T)}{n\pi t_r/T}, \qquad (11\text{-}4)$$

where I is the peak-to-peak amplitude of the wave, d is the duty cycle, t_r is the rise time, T is the period, and n is the harmonic number. The units of I_n will be the same as the units used for I, since the rest of the equation is dimensionless. Equation 11-4 assumes that the rise time equals the fall time. If it does not, the smaller of the two should be used for a worst-case result. For the case of a 50% duty cycle ($d = 0.5$), the first harmonic (fundamental) has an amplitude $I_1 = 0.64I$ and only odd harmonics are present. This is for the case where the rise time (t_r) is much less than the period (T). Figure 11-5 shows the envelope of the harmonics for a symmetrical wave. The harmonics fall off with frequency at a 20 dB per decade rate up to a frequency of $1/\pi t_r$; beyond that they fall off at a rate of 40 dB per decade. This shows that as the rise time increases, the energy in the higher harmonics decreases.

The differential-mode radiated emission can be calculated by first determining the current contained in each harmonic from Eq. 11-4, and then

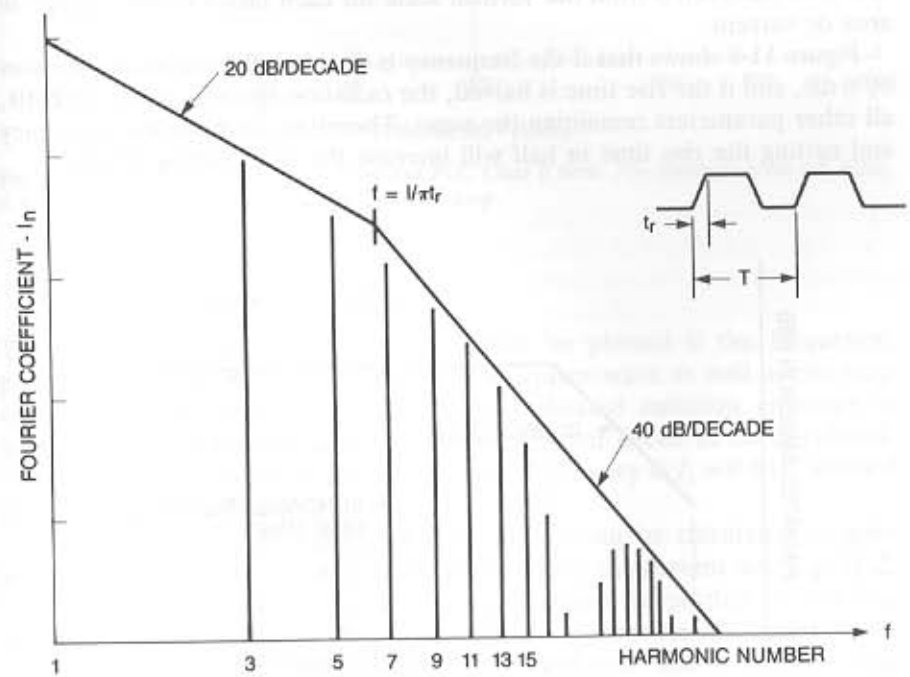

Figure 11-5. *Envelope of Fourier spectrum from a 50% duty cycle trapezoidal wave.*

substituting this current and the respective frequency into Eq. 11-2. This calculation is then repeated for each harmonic frequency.

If the loop is driven by a constant amplitude current, the frequency squared term in Eq. 11-2 represents an increase in emission with frequency of 40 dB per decade. The result of combining Eqs. 11-2 and 11-4 is that the radiated emission increases 20 dB per decade for frequencies less than $1/\pi t_r$, and remains constant above this frequency.

Figure 11-6 shows a plot of the differential-mode radiated emission envelope versus frequency. Figure 11-6 clearly illustrates the important effect of rise time on radiated emission. It is the rise time that determines the breakpoint above which radiation stops increasing with the frequency. To decrease the emission, it is desirable to minimize the frequency and maximize the rise time of the signal.

As an example, the radiated emission measured at 3 m from a 6-MHz clock with a 4-ns rise time flowing around a loop with an area of 10 cm^2 (1.5 $in.^2$) is shown in Fig. 11-7. The loop is being driven by a TTL gate, and the current is assumed to be 35 mA.

If a series of similar calculations are made, each with a different frequency and rise time, and the maximum emission point taken from each is plotted, Fig. 11-8 results. This figure is useful as a quick estimate of the expected maximum emission for various rise time/frequency combinations. For loop areas and currents other than those specified, 6 dB should be added or subtracted from the vertical scale for each factor of two change in area or current.

Figure 11-8 shows that if the frequency is doubled, the radiation increases by 6 dB, and if the rise time is halved, the radiation again increases by 6 dB, all other parameters remaining the same. Therefore doubling the frequency and cutting the rise time in half will increase the radiation by 12 dB.

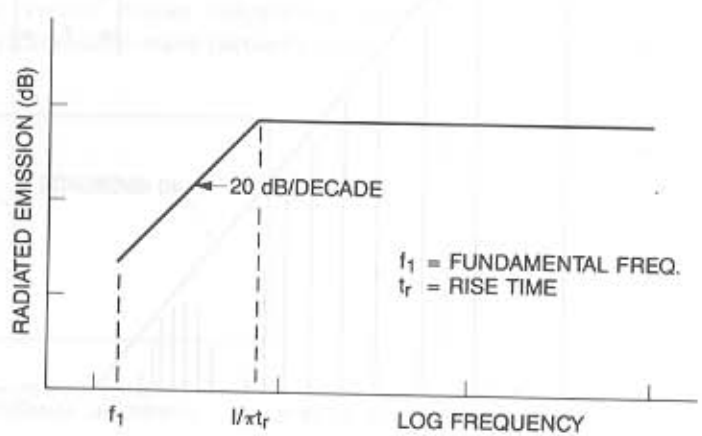

Figure 11-6. *Differential-mode radiated emission envelope versus frequency.*

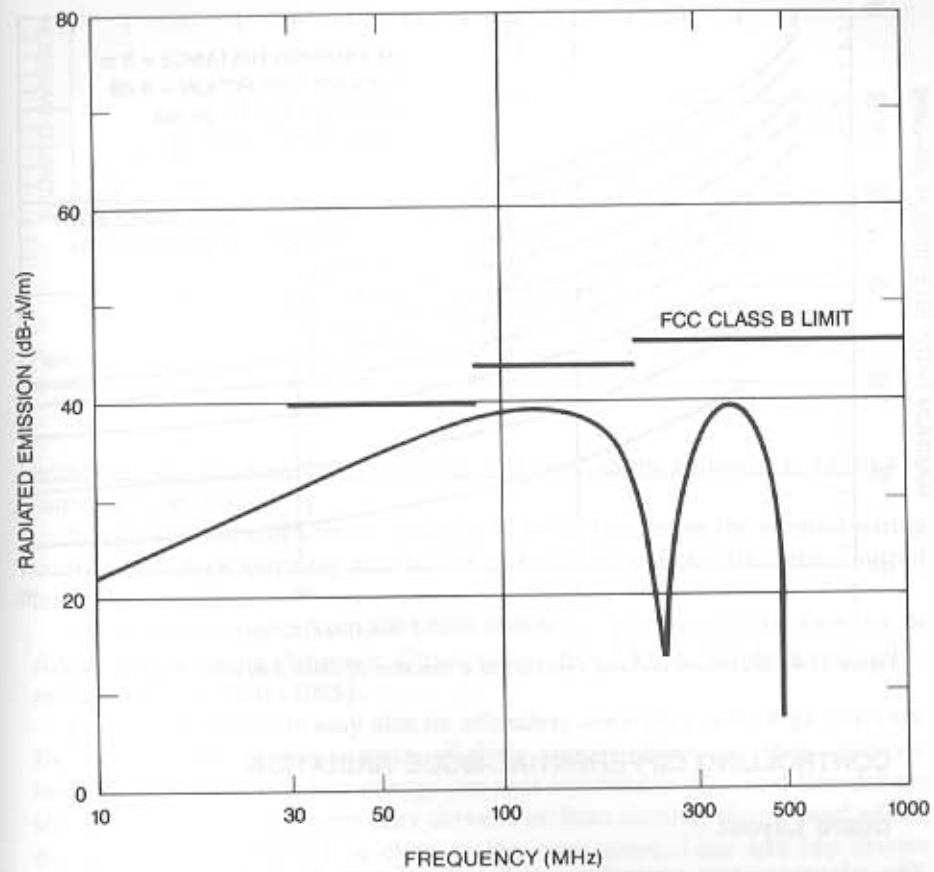

Figure 11-7. *Radiated emission spectrum and FCC Class B limit. The spectrum is for a 6-MHz, 4-ns rise time, 35 mA clock signal in a 10-cm^2 loop.*

Radiated Emission Envelope

The radiated emission envelope can easily be plotted if the frequency, peak-to-peak current, and rise time of the square wave as well as the loop area are known. Since the shape of the radiated emission envelope is known, only the fundamental frequency radiation needs to be calculated. The Fourier coefficient for the fundamental frequency is $I_1 = 0.64I$, where I is the peak-to-peak current of the wave.

The radiation at the fundamental frequency can be calculated by substituting 0.64 times the peak-to-peak amplitude of the current into Eq. 11-2. The radiated emission at this frequency can then be plotted on semilog paper. A line increasing by 20 dB per decade is drawn from this point, up to a frequency of $1/\pi t_r$, beyond which a horizontal line is drawn. This represents the envelope of the radiated emission.

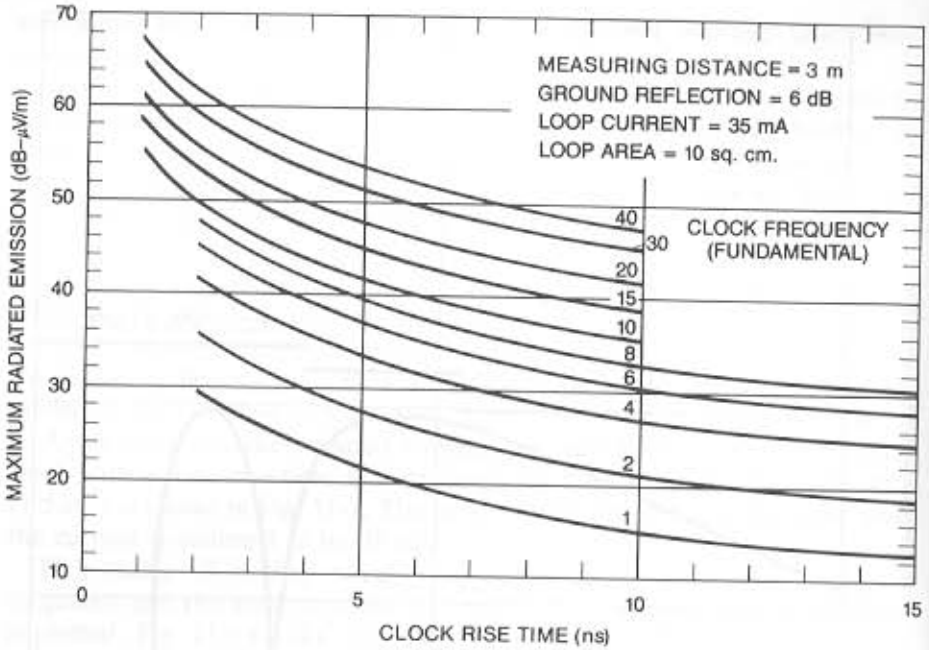

Figure 11-8. *Maximum radiated emission as a function of clock frequency and rise time.*

CONTROLLING DIFFERENTIAL-MODE RADIATION

Board Layout

The place to start controlling radiated emission is on the layout of the printed wiring board. For it to be cost-effective, consideration must be given to emission when the board is initially designed.

When laying out a printed wiring board to control emission, one should minimize the loop areas formed by the signal paths. Trying to control each loop area formed by signal and transient power-supply currents is a formidable job. Fortunately, it is not necessary to handle all loops individually. The most critical loops are those carrying the system clock because they are the primary sources of radiation.

Since the clock is the highest-frequency signal in a system and is periodic, all of its energy is concentrated in narrow frequency bands consisting of the fundamental plus the harmonics. In almost all cases the emission from the clock exceeds the emission from all the other parts of the circuit. Therefore all clock leads must have adjacent ground-return leads for the total area of the clock loops to be less than a few square centimeters. If the board has a ground plane, this can act as the return path for the clock current.

Figure 11-9A shows the radiated emission spectrum from a typical computing device. Figure 11-9B shows the emission from the same device

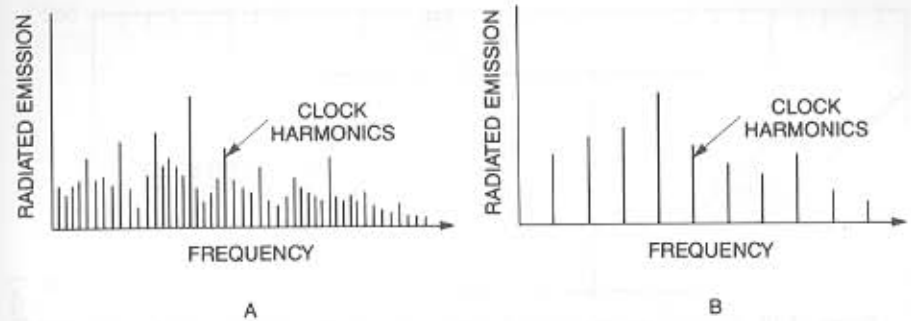

Figure 11-9. *Typical radiated emission spectrum from a digital circuit: (A) with all circuits operational; (B) with only clock circuits operational.*

with only the clock circuit operating. The maximum emission is about the same in both cases.

To prevent the clock from coupling to leads that leave the printed wiring board, the clock circuitry should be located away from the input/output leads or circuitry.

To minimize crosstalk, clock leads should not run parallel to data bus or signal leads for long distances. Crosstalk on digital logic boards is covered in more detail by Paul (1985).

Line and bus drivers may also be offenders since they carry high currents. Because of the random nature of their signals, however, they generate broad-band noise with less energy per unit bandwidth. Bus and line drivers should be close to the lines they drive. For lines leaving the printed wiring board the drivers should be close to the connectors. Line and bus drivers used to drive off-board loads should not also be used to drive other circuits on the board.

Address buses, data buses, and other miscellaneous signal leads are secondary sources of radiation. Not as important as the clock leads, their loop areas should still be kept to a minimum, by providing at least one signal return (ground) lead adjacent to each group of eight data or address leads. This ground return is best placed adjacent to the least significant address lead, since the latter usually carries the highest-frequency current. Most miscellaneous signal loop areas can be controlled by using a ground grid or plane, which is also required to minimize the amount of internally generated noise (see Chapter 10).

Another source of radiated emission is the transient power-supply current required for digital logic gates during switching. These loop areas can be controlled by decoupling capacitors placed next to each IC as was shown in Fig. 10-6.

Transient power-supply currents should be confined to the printed wiring board and kept off backplane and interconnecting cables. This can be accomplished by using IC decoupling capacitors—located physically close to

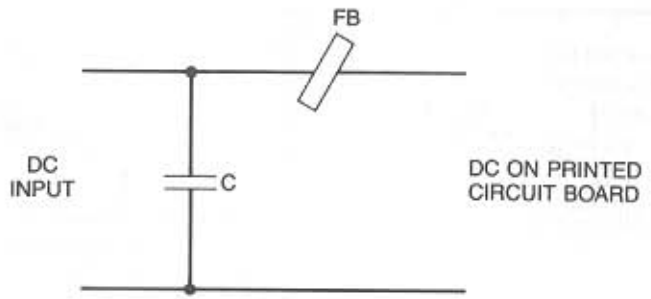

Figure 11-10. *Ferrite bead capacitor filter used where power enters a printed wiring board.*

the gates—together with a bulk decoupling capacitor. If additional filtering is required, a ferrite bead and capacitor filter—located where power enters the board—can be used, as shown in Fig. 11-10. Typical values for this filter are a 0.001 μF capacitor and a ferrite bead whose resistance is greater than 50 Ω from 50 to 100 MHz (Keenan, 1984). In this application it is important to avoid saturation of the ferrite bead by the dc current.

Multilayer Boards

The techniques just described are applicable to both multilayer and two-sided printed wiring boards. In the multilayer case the return (ground) current will flow in the ground plane, following the same path as the signal lead, since this produces the minimum inductance, as was discussed in Chapter 10. The loop area is determined by the length of the signal lead and the spacing between the signal layer and the ground plane. Although ground planes are desirable in many situations, they are expensive, and it is often possible to control radiation by using a ground grid and the other techniques described in this and the previous chapter.

In high-speed logic (rise times less than 3 or 4 ns), ground planes may be required for other reasons—for example, to provide constant impedance signal interconnections. In such cases the use of the ground plane for EMC involves no additional cost.

When the propagation delay of a line is small compared to the rise time of the signal, any reflections that occur are masked by the rise time. However, when the two-way propagation delay becomes appreciable compared to the signal rise time, reflections will travel back and forth on the line, causing ringing. Under these conditions impedance control and line termination become a necessity. These ringing frequencies are also a source of increased radiated emission.

Using a velocity of propagation that is 60% of the speed of light, the maximum permissible unterminated line length occurs when the two-way propagation delay equals the signal rise time, and it is

$$L_{max} = 9t_r \,, \tag{11-5}$$

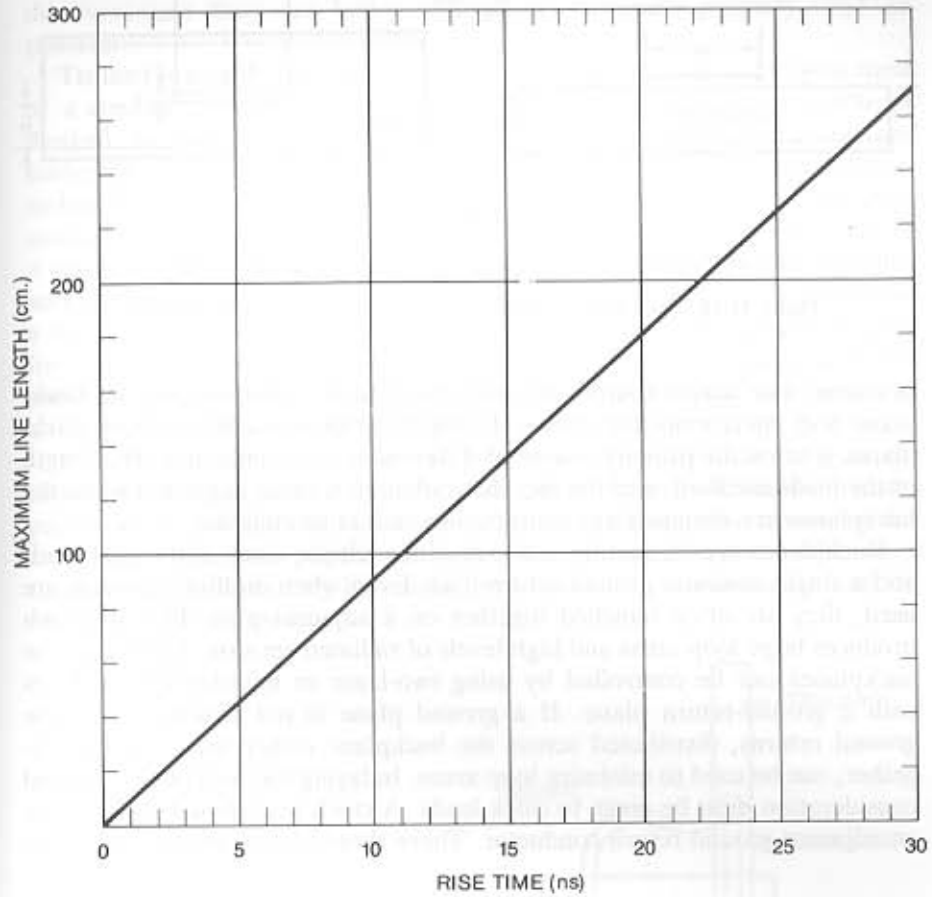

Figure 11-11. *Maximum unterminated line length versus signal rise time.*

where t_r is in nanoseconds and L_{max} is in centimeters. Figure 11-11 shows a plot of this equation.

To terminate a line in its characteristic impedance, the impedance of the signal line must be controlled. The most common way to do this on a printed wiring board is with a microstrip or a strip line. Figure 11-12 shows microstrip and strip-line geometries. To minimize noise problems in logic with rise times of less than a few nanoseconds, printed wiring boards should be laid out following rf or ECL layout rules (see Blood 1983).

Backplanes

If proper grounding, power-supply decoupling, and layout are used, radiated emission from a printed wiring board should not be a major

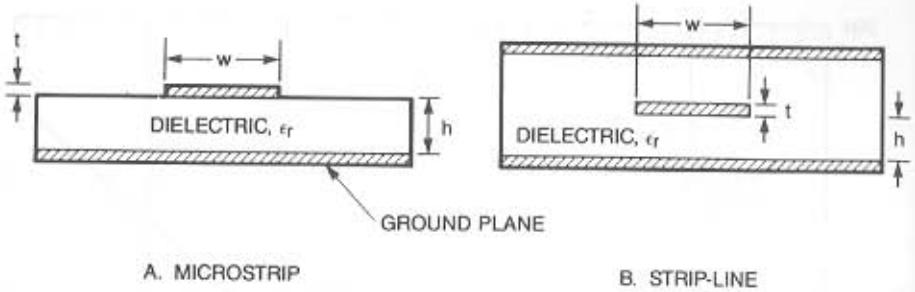

Figure 11-12. *Transmission line geometries: (A) microstrip; (B) strip line.*

problem. The major sources of differential-mode radiation are the backplane and interconnecting cables. In digital systems, radiation from backplanes is often the primary source of differential-mode emission. The length of the leads involved, and the fact that radiation is often neglected when the backplanes are designed are contributing factors to emission.

Backplanes are frequently laid out with multiple clock and signal leads and a single common ground-return lead. Even when multiple grounds are used, they are often bunched together on a adjacent pins. This approach produces large loop areas and high levels of radiated emision. Loop areas on backplanes can be controlled by using two-layer or multilayer backplanes with a ground-return plane. If a ground plane is not practical, multiple ground returns, distributed across the backplane rather than bunched together, can be used to minimize loop areas. In laying out backplanes, special consideration must be given to clock leads. A clock lead should *always* have an adjacent ground return conductor. There should be no exception to this.

Interconnecting Cables

Interboard or interunit cabling can also be a source of differential-mode radiated emission. The primary design objective for cabling is to provide a return current path adjacent to the signal path to minimize the enclosed loop area. How the signal return (ground) is terminated determines the ability of a cable to reduce radiation. An improperly terminated return can destroy the effectiveness of an otherwise good cable design. The following cables are listed in order of decreasing effectiveness in reducing radiation: coax, tri-lead, twisted pair, and ribbon cable (with properly assigned wires).

A coaxial cable, with its shield properly grounded at both ends, provides at high frequencies virtually zero loop area, as discussed in Chapter 3. When shielded cables are used, special considerations must be given to shield termination. An improper shield termination (pigtail) can produce a differential-mode to common-mode transformation, causing the cable to emit common-mode radiation. A good discussion of the effect of shield terminations on coaxial cables is given by Paul (1980). Coaxial cables have some

disadvantages: they are bulky, difficult to terminate properly, and expensive.

Tri-lead is a cable that combines the advantages of a flat cable with those of a coaxial cable. It is a minature cable with a single signal conductor flanked by two larger ground conductors, all in the same plane and embedded in a dielectric as shown in Fig. 11-13A. Its capacitance, characteristic impedance, and propagation delay are similar to those of a miniature coaxial cable. Its crosstalk noise is only slightly worse than that of a coax, as a result of the shielding effect of the two ground conductors. It is smaller and less bulky than coax and can be terminated easily. Figure 11-13B shows a typical termination. Tri-lead is ideally suited as an interconnection cable for high-speed clock signals, where the characteristics of a coax are desired without its complexity, bulk, and cost. A more detailed description of tri-lead can be found in Kolias (1972).

A shielded twisted pair provides a small loop area, as long as the conductors are not separated at the ends (terminations). If shielded twisted pair is used, a single shield can be placed over many pairs, assuming that crosstalk between the pairs is not a problem. At high frequencies the use of twisted pair is limited by its nonuniform characteristic impedance and the reflections caused by it.

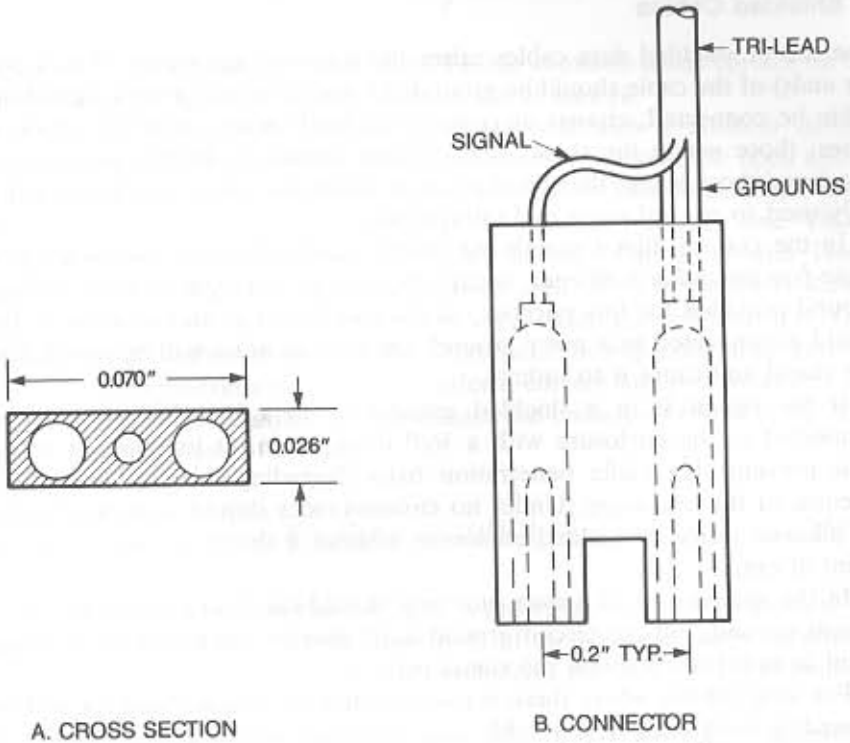

Figure 11-13. *Tri-lead cross section (A) and connector (B).*

If ribbon cables are used, multiple ground conductors should be distributed across the cable to minimize the loop areas. The best arrangement of conductors is ground–signal–ground–signal–ground, etc. Another method that is almost as effective is ground–signal–signal–ground–signal–signal–ground. These configurations are shown in Fig. 2-40.

Signal conductors over a ground plane can also be used in a ribbon cable, provided the ground plane is properly terminated. Proper termination requires that the full width of the ground plane be in contact with ground. Termination should not be made with pigtails or drain wires. Ribbon cables can also be shielded, but an effective 360° termination is difficult to achieve.

The use of fiber optics is another possible option for digital circuit interconnections, especially clock signals. Fibers can provide high-bandwidth, low-propagation delay signal interconnection with no radiated emission or susceptibility involving the cable. As their price decreases, fiber optical systems will become more cost-effective for digital system interconnection, especially in large systems.

The best way to handle clock signals is to use coaxial cable, because a coaxial cable has the largest mutual inductance of any cable configuration. Otherwise, the tri-lead or twisted pair cable should be used.

Shielded Cables

The use of shielded data cables raises the following questions: Which end (or ends) of the cable should be grounded? And to which ground should the cable be connected, chassis or circuit? Shielded cables are of two general types: those where the shield is the return conductor for the signal (i.e., coax) and those where the signal return is within the cable, and the shield is only used to control noise and interference.

In the case of digital signals *the shield should always be connected to a noise-free ground at both ends*, usually the chassis or a separate input/output ground provided for this purpose, as discussed later in this chapter. If the shield is connected to a noisy ground, the ground noise will be coupled to the shield and cause it to radiate.

If the circuit is in a shielded enclosure, the cable shield should be connected to the enclosure with a 360° termination, at its point of entry. This prevents the cable penetration from degrading the shielding effectiveness of the enclosure. Under no circumstances should a shielded cable be allowed inside a shielded enclosure without a shield termination at its point of entry.

In the special case of a coax, not only should the shield be connected to chassis ground, but the circuit ground must also be connected at the same point in order to complete the signal path.

For long cables, where there is concern that the ground loop formed by grounding both ends of the cable may introduce low-frequency noise into the system, a hybrid ground can be used. This is achieved by grounding the receiving end of the cable shield and terminating the shield at the transmitting end through a capacitor.

COMMON-MODE RADIATION

Differential-mode radiation is easily controlled in the design and layout of a product. On the other hand, common-mode radiation is harder to control and normally determines the overall emission performance of the product.

Common-mode radiation emanates from the cables in the system. The radiated frequencies are determined by the common-mode potential (usually the ground voltage), as can be seen from Fig. 11-2. The frequencies radiated are not the same as differential-mode signals in the cable.

Common-mode emission can be modeled as a short (less than one-quarter wavelength), monopole antenna (the cable), driven by a voltage (the ground voltage). For a short monopole antenna of length l over a ground plane, the magnitude of the electric field strength, measured at a distance r in the far field is (Balanis 1982, p. 111, Eq. 4-36a)

$$E = \frac{4\pi \times 10^{-7}(fIl)\sin\theta}{r}, \tag{11-6}$$

where E is in volts/meter, f is in hertz, I is the common-mode current on the cable (antenna) in amperes, and l and r are in meters.

Equation 11-6 is valid for an ideal antenna with a uniform current distribution. For a real antenna the current goes to zero at the open end of the wire. In practice, a uniform current distribution can be achieved if the antenna is capacitively loaded with a metal plate at the open end. This is called a capacitor-plate or top-hat loaded antenna (Stutzman and Thiele 1981, p. 81). This configuration is approximated when the antenna (cable) connects to another piece of equipment that is either grounded or, if it is not grounded, has sufficient capacitance to ground. The capacitor-plate antenna then closely approximates the ideal uniform current antenna model.

Assuming an orientation that maximizes the emission ($\theta = 90°$), Eq. 11-6 can be rewritten as

$$E = 12.6 \times 10^{-7}(fIl)\left(\frac{1}{r}\right). \tag{11-7}$$

Equation 11-7 shows that the radiation is proportional to the frequency, the length of the antenna, and the magnitude of the common-mode current on the antenna. The primary method of minimizing this radiation is to limit the common-mode current.

The frequency term in Eq. 11-7 represents an increase with frequency of 20 dB/decade. If the cable is driven by a constant current, the net result of

combining this with Eq. 11-4 for the Fourier coefficients is that the common-mode emission spectrum is flat up to a frequency of $1/\pi t_r$, and decreases at a rate of 20 dB/decade above that frequency.

Figure 11-14 shows the envelope of the common-mode emission. Because of the fall-off at higher frequencies, common-mode emission is only a problem at frequencies below $1/\pi t_r$. Therefore, for rise times in the 4- to 10-ns range, common-mode emission problems normally occur betwen 30 and 80 MHz.

The ratio of the differential-mode current to the common-mode current needed to produce the same radiated field can be determined by setting Eq. 11-2 equal to Eq. 11-7 and solving for the ratio of the currents. Therefore

$$\frac{I_d}{I_c} = \frac{48 \times 10^6 l}{fA}, \tag{11-8A}$$

where I_d and I_c are, respectively, the differential-mode and the common-mode currents needed to produce the same amount of radiated emission. If the cable length l is equal to 1 m, the loop area A is equal to 10 cm^2 (0.001 m^2) and the frequency is 50 MHz, then Eq. 11-8A reduces to

$$\frac{I_d}{I_c} = 1000. \tag{11-8B}$$

This means that it takes three orders of magnitude more differential-mode current than common-mode current to produce the same field. In other words, a common-mode current of a few microamperes can cause the same amount of radiated emission as a few milliamperes of differential-mode current.

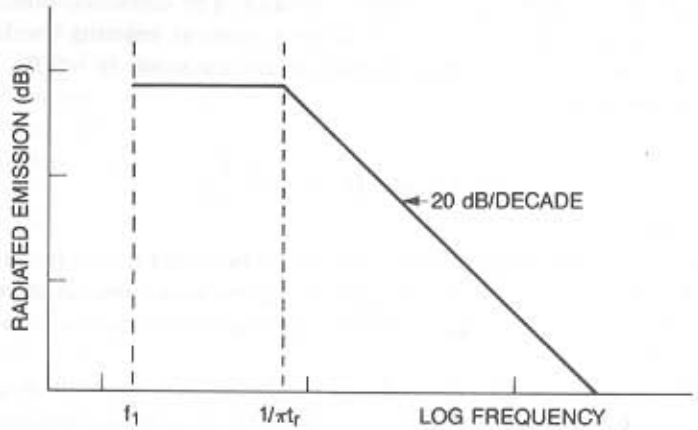

Figure 11-14. *Common-mode radiated emission envelope versus frequency.*

CONTROLLING COMMON-MODE RADIATION

As in the case of differential-mode radiation, it is desirable to limit both the rise time and the frequency of the signal to decrease common-mode emission.

Cable length is determined by the distance between the components being interconnected, and is not usually under the designer's control. In addition, when the cable length reaches one-quarter wavelength, the emission no longer continues to increase with cable length, due to the presence of out-of-phase current.

The only parameter in Eq. 11-7 that the designer can control to minimize the emission is the common-mode current. The common-mode current can be thought of as a "control knob" to the radiated emission. No common-mode current is required for system operation.

Common-mode current can be controlled by:

1. Minimizing the source voltage that drives the antenna (normally the ground potential).
2. Providing a large common-mode impedance (choke) in series with the cable.
3. Shunting the current to ground.
4. Shielding the cable.

The common-mode suppression components used must be such that they affect the common-mode current (usually clock harmonics) and not the functionally required differential-mode signals. Since the interface cables usually carry signals whose frequencies are lower than the clock frequency, this is easy to achieve. For high-frequency interconnections, such as clock signals, decoupling by shunting the current to the ground cannot be used, and other suppression methods such as common-mode chokes or shielding must be considered.

Common-Mode Voltage

The first step in controlling common-mode radiation is to minimize the common-mode voltage that drives the radiating antenna (cable). Most methods of minimizing differential-mode emission will also minimize the common-mode voltage. As an example, use of a ground grid or plane is effective in reducing the voltage drop in the ground system.

The effectiveness of a ground grid in reducing common-mode emission can be seen in Fig. 11-15. The figure shows radiated emission with and without a ground grid on the printed wiring board. The data are from German (1985).

Proper choice of the point where the external (earth) ground connects to the system can also decrease the common-mode voltage. The farther apart

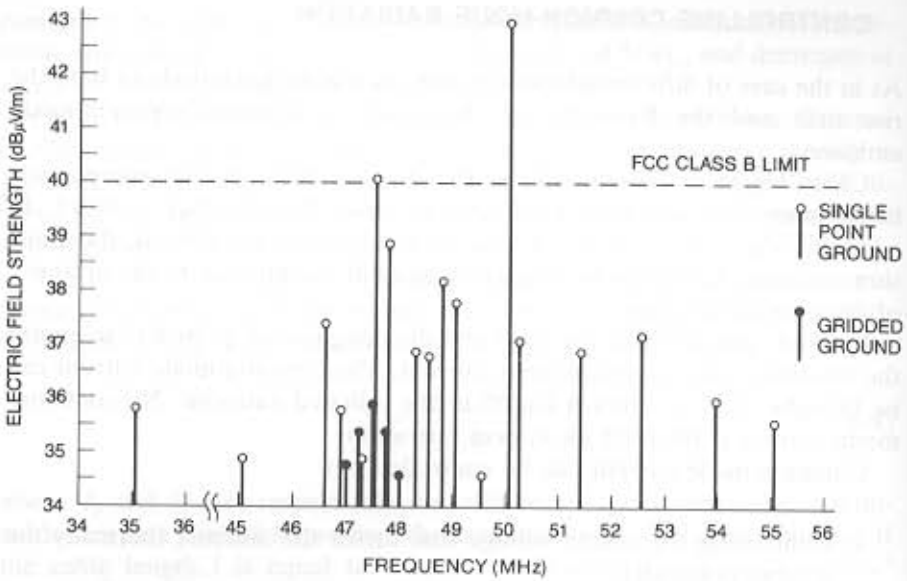

Figure 11-15. *Measured radiated emissions from a printed wiring board, with and without a gridded ground (from German, 1985).*

the external ground connection is from the interface cables, the more likely it is that there is a large noise voltage between the points. Even with a ground grid or plane, the common-mode voltage cannot always be reduced enough to eliminate the emission. Therefore additional control techniques are required.

Cable Decoupling and Shielding

Cable decoupling (shunting the current to ground) and shielding require a "quiet" or "clean" ground (one not contaminated by the digital logic noise). Unless consideration is given to this early in the design, such a ground will not be available.

To use cable decoupling or shielding for common-mode suppression, printed wiring boards must be laid out in such a way that there is a "quiet" input/output (I/O) ground. This can best be done by placing all the I/O leads in one area of the board and providing, in this area, a separate low inductance I/O ground that connects to the digital logic ground at only one point. This way, none of the digital logic ground currents can flow through the "quiet" ground to contaminate it with noise.

Figure 11-16 shows one implementation of this concept. In order to avoid contaminating the I/O ground, the only allowable connections to it should be I/O lead decoupling capacitors and external cable shields. The ground must have a low-impedance connection to an external ground, usually

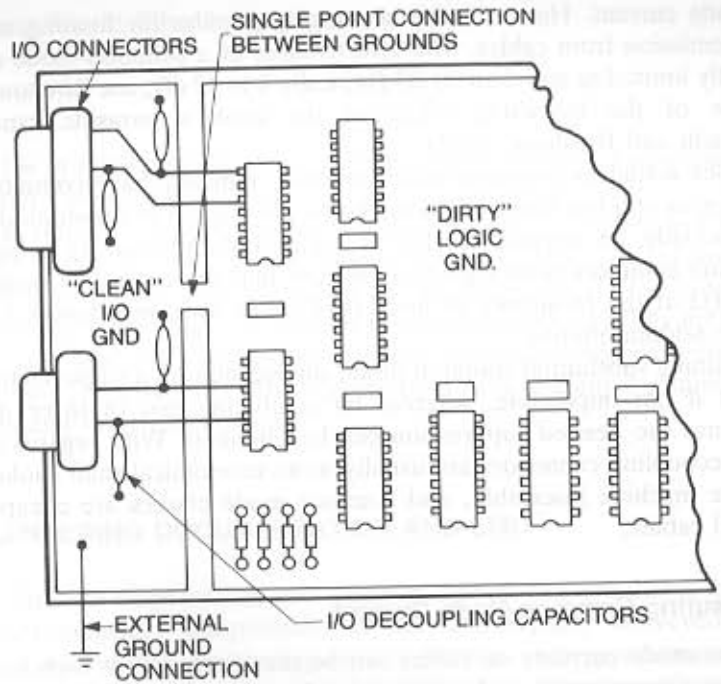

Figure 11-16. *Digital PWB with separate "clean" input/output (I/O) ground and I/O cable decoupling capacitors.*

through the power line green wire (safety) ground. The I/O ground should have multiple connections to the chassis ground in order to minimize its inductance.

This concept can be applied to any system configuration, even in large multiboard systems. The important point is that somewhere in the system there must be a clean I/O ground. All cables should be decoupled to this ground before leaving the system. Once the noise is removed from the cables, their routing must be carefully controlled to avoid coupling system noise back into the cables. Therefore the clean I/O ground should be at the point where the cables leave the system.

The effectiveness of the cable decoupling capacitors depends on the common-mode source impedance of the driving circuit. Sometimes better results can be obtained by using a series resistor or inductor in addition to the cable decoupling capacitor. Filter pin connectors with built-in shunt capacitors and/or series inductive elements (usually ferrites) can also be used.

Common-Mode Chokes

A common-mode choke is the only technique that does not require a ground to function, and by the nature of its operation does not affect the differen-

tial-mode current. Hence chokes are highly popular for limiting common-mode emission from cables. The effectiveness of a common-mode choke is normally limited to less than 20 dB (typically 6 to 12 dB; see Ritenour, 1982) because of the bypassing effect of the choke's parasitic capacitance (Nakauchi and Brashear, 1982).

Cables acting as common-mode antennas typically have common-mode impedances of a few hundred ohms. To be effective, a common-mode choke must provide an impedance that is significantly greater by comparison. Therefore common-mode chokes must have impedances in the range of 100 to 1000 Ω at the frequency of interest. Chokes with impedances less than this are seldom effetive.

Obtaining substantial common-mode suppression by a single technique is difficult if not impossible, whereas by combining two or three different techniques the needed suppression can be obtained. With regards to cost, cable decoupling capacitors are usually more economical than chokes since they are machine insertable, and common-mode chokes are cheaper than shielded cables.

Measuring Common-Mode Current

Common-mode currents on cables can be measured with a high-frequency clamp-on current probe and spectrum analyzer (or EMI receiver) as shown in Fig. 11-17. Therefore the effectiveness of various mitigation techniques can be determined in the development laboratory before radiated emission testing. Since common-mode emission is the predominant radiation mechanism in most products, these common-mode currents determine the maximum emission. The common-mode current is related to the radiated emission by Eq. 11-7.

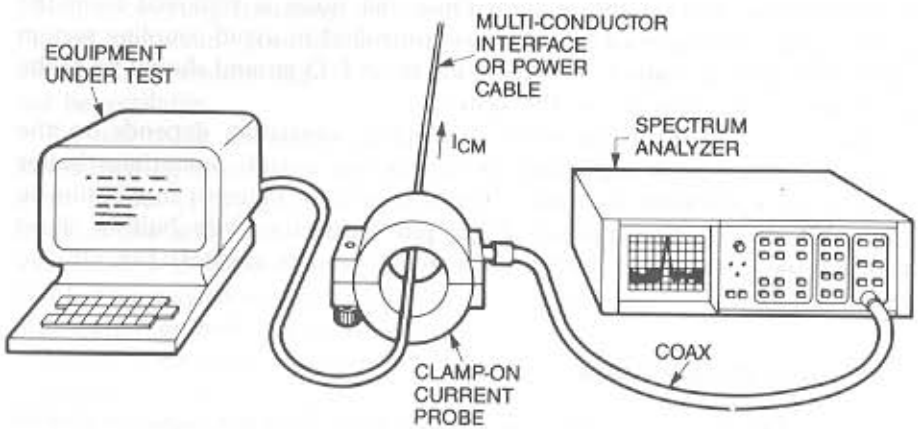

Figure 11-17. *Measuring common-mode currents on system cables.*

Solving Eq. 11-7 for I gives

$$I = \frac{0.8Er}{fl}, \tag{11-9}$$

where I is in microamperes, E is in microvolts per meter, f is in megahertz, and r and l are in meters.

For example, to limit the radiated emission measured at 3 m to 100 μV/m (the FCC Class B limit), the maximum common-mode current on a cable one meter long at 50 MHz is 5μA. For 300 μV/m (the FCC Class A limit) the maximum current is 15 μA under the same conditions. Only millivolts of ground potential are required to produce common-mode currents of this magnitude. Therefore all cables require treatment to control common-mode currents and radiated emission.

ENGINEERING DOCUMENTATION AND EMC

As the last two chapters indicate, much of the information that is important for electromagnetic compatibility is not conveniently conveyed by the standard methods of engineering documentation, such as schematics.

The transmission of engineering documentation alone is insufficient: good EMC design requires cooperation and discussion between the electrical engineer, mechanical engineer, EMC engineer, and printed wiring board designer.

In addition most CAD tools for printed wiring board layout do not include EMC considerations. EMC considerations must therefore be applied manually by overriding the CAD system (i.e., by a ground grid, or by placing a return conductor next to a clock lead).

SUMMARY

- Differential-mode emission can be controlled by circuit layout. Therefore the overall product emission is normally determined by the common-mode emission.
- The key to reducing differential-mode radiation is to minimize the area of all loops carrying signal currents and transient power-supply currents. The most critical of these are loops carrying the clock signals.
- All clock leads must have adjacent ground returns.
- The best conductors for carrying off-board clocks are fiber optics, coax, tri-lead, and twisted pair, in that order.
- Shielded cables, used with digital logic, should have the shield grounded at both ends.

- Ground terminations of cable shields should provide a 360° contact with the shield.
- A ground grid or plane should always be used on digital logic boards to minimize loop areas and common-mode ground potential.
- Both differential-mode and common-mode emission increase with increasing clock frequency and decreasing clock pulse rise time.
- The key to controlling common-mode radiation is to minimize the common-mode current on all the system cables.
- All cables entering or leaving the system require treatment to control common-mode emission.
- All I/O leads should be located in one area of the printed wiring board. A "quiet" I/O ground, connected to the digital logic ground at only one point, should be provided in this area of the board.
- I/O drivers should be near the connector.
- Clock circuitry and leads should be away from the I/O area.
- The following techniques can be used to control common-mode currents and to reduce costs. They should be used in the following order: (1) reduce the common-mode voltage, (2) decoupling, (3) common-mode chokes, and (4) cable shielding.
- Common-mode currents should be measured on all cables, and compared to the prescribed limits, before radiated emission testing takes place. This provides a high degree of confidence that the product will pass the radiated emission test.
- For the control of radiation the summary of Chapter 10 is also relevant.
- Emission control must be considered during the initial design and layout. As a product progresses through its various developmental phases—initial design, prototype, testing, final models, and production—the degrees of freedom available to control emission problems decrease, and consequently the cost of solutions increases.

BIBLIOGRAPHY

Balanis, C. A. *Antenna Theory*. Harper & Row, New York, 1982.

Blood, W. R. "MECL System Design Handbook." Motorola Semiconductor Products, Phoenix, Ariz., 1983.

Bush, D. R. "Radiated Emissions of Printed Circuit Board Clock Circuits." 6th Symposium on Electromagnetic Compatibility. Zurich, Switzerland, March 5–7, 1985.

German, R. F. "Use of a Ground Grid to Reduce Printed Circuit-Board Radiation." 6th Symposium on Electromagnetic Compatibility. Zurich, Switzerland, March 5–7, 1985.

ITT. *Reference Data for Radio Engineers*. 5th ed. Howard W. Sams & Co., New York, 1968.

Keenan, K. K. "Digital Design for Interference Specifications." Keenan Corp., Vienna, Va., 1983.

Keenan, K. K. "FCC/VDE Noise Specifications: Application of Ferrite Beads to Decoupling Printed Circuit Boards from Backplanes." Technical Report, Keenan Corp., Vienna, Va., 1984.

Kolias, J. T. "TRI-LEAD: A New Interconnection Scheme for Computers." *Electronic Packaging and Production*, February 1972.

Nakauchi, E., and Brashear, L. "Technique for Controlling Radiated Emission Due to Common-Mode Noise in Electronic Data Processing Systems." IEEE International Symposium on Electromagnetic Compatibility. September 1982.

Ott, H. W. "Digital Circuit Grounding and Interconnection." IEEE International Symposium on Electromagnetic Compatibility. August 1981.

Ott, H. W. "Controlling EMI by Proper Printed Wiring Board Layout." 6th Symposium on EMC. Zurich, Switzerland, March 5–7, 1985.

Parker, J. W. "A Useful Model for Evaluating Cable Radiation." IEEE International Symposium on Electromagnetic Compatibility. 1984.

Paul, C. R. "Effect of Pigtails on Crosstalk to Braided Shielded Cables." *IEEE Transactions on Electromagnetic Compatibility*, August 1980.

Paul, C. R. "Printed Circuit Board EMC." 6th Symposium on EMC. Zurich, Switzerland, March 5–7, 1985.

Ritenour, T. J. "Designing to Control Common Mode Current Related Emissions from Computer Systems." Session 28 Record, MIDCON/82, Dallas, Tx., 1982.

Stutzman, W. L., and Thiele, G. A. *Antenna Theory and Design*. Wiley, New York, 1981.

Weeks, W. L. *Electromagnetic Theory for Engineering Applications*. Wiley, New York, 1964.

12 ELECTROSTATIC DISCHARGE

Static electricity is familiar to all of us as the static cling of clothing, as sparking caused by touching a doorknob or other metal object, and as lightning. Static electricity was known to the ancient Greeks over 2000 years ago. In medieval times magicians used electrostatic effects as part of their "bag of tricks." In our time static electricity has been harnessed to perform many useful functions. Examples of products using this principle are electrostatic copiers, dust precipitators, air cleaners, and electrostatic spray painters.

However, uncontrolled electrostatic discharge (ESD) has become a hazard to the electronics industry. Since the early 1960s it has been recognized that thick and thin film solid state devices, metal-oxide-semiconductor devices, and many discrete electrical parts such as film resistors, capacitors, crystals, and bipolar ICs are susceptible to damage by electrostatic discharge. As devices become smaller and faster, their susceptibility to ESD will increase.

ESD control is a special case of the overall subject of EMC. As will be seen, the techniques used to decrease the susceptibility of a system to ESD are, in many cases, similar to those used to control radiation.

STATIC GENERATION

Static electricity is generated by contact and subsequent separation of materials. The materials may be solids, liquids, or gases. When two nonconductors (insulators) are in contact, some charge (electrons) is transferred from one material to the other. When the two materials are then separated, this charge may not return to the original material since charge is not very mobile in an insulator. If the two materials were originally neutral, they are now charged, one positively and the other negatively.

This method of generating static electricity is referred to as the triboelectric effect. Some materials readily absorb electrons while others tend to give them up easily. The triboelectric series is a listing of materials in order of their affinity for giving up electrons. Table 12-1 is a typical triboelectric series. The materials at the top of the table easily give up electrons and therefore acquire a positive charge. The materials at the bottom of the table

Table 12-1 Triboelectric Series

POSITIVE	
1. Air	18. Hard rubber
2. Human skin	19. Mylar[a]
3. Asbestos	20. Epoxy glass
4. Glass	21. Nickel, copper
5. Mica	22. Brass, silver
6. Human hair	23. Gold, platinum
7. Nylon	24. Polystyrene foam
8. Wool	25. Acrylic
9. Fur	26. Polyester
10. Lead	27. Celluloid
11. Silk	28. Orlon
12. Aluminum	29. Polyurethane foam
13. Paper	30. Polyethylene
14. Cotton	31. Polypropylene
15. Wood	32. PVC (vinyl)
16. Steel	33. Silicon
17. Sealing wax	34. Teflon[a]
	NEGATIVE

[a]Trademark of E. I. du Pont de Nemours.

easily absorb electrons and therefore acquire a negative charge. It should be kept in mind, however, that this series is only approximate.

When two materials are in contact, electrons will be transferred from the material higher on the list to the material lower on the list. The degree of separation of two materials in Table 12-1 does not necessarily indicate the magnitude of charge created by the triboelectric effect. The magnitude depends not only on the ordering of the materials in the series but also on the surface cleanliness, pressure of the contact, amount of rubbing, surface area in contact, smoothness of surface, and the speed of separation. A charge can also be generated when two pieces of the same material are in contact and then separated; a good example is the opening of a plastic bag.

The relationship between charge, voltage, and capacitance is

$$V = \frac{Q}{C}. \tag{12-1}$$

As two materials are separated, the charge imbalance Q remains fixed; therefore the product VC is a constant. When the materials are close together, the capacitance is large; hence the voltage is low. As the materials are separated, the capacitance decreases and the voltage increases.

For example, if the capacitance is 75 pF and the charge is 3 μC the voltage will be 10,000 V.

This effect also occurs when an insulator is separated from a conductor, but it will not occur between two conductors. In the latter case, as soon as separation starts, the charge returns to the original material because the mobility of the charge is large in a conductor.

Thus both conductors and insulators can easily be charged by contact and separation with another insulator. Intimate contact is all that is needed to give rise to a static charge. Rubbing just tends to bring more of the surface in good contact and hence increases the charge transfer. Faster separation gives less time for charge reflow and also increases the stored charge, and the voltage.

Table 12-2, from DOD-HDBK-263, shows typical electrostatic voltages that can be generated under various conditions. The generation of 10 to 20 kV on common materials in the home and work environment is not unusual.

Static electricity is a surface phenomenon. The charge exists solely on the surface of the material and not inside. The charge on an insulator remains in the area in which it is generated, and it is not distributed over the entire surface. For this reason, grounding an insulator will not eliminate the charge. Unlike an insulator, a charged conductor will lose its charge if grounded.

Electrostatic discharge is normally a three-step process: (1) a charge is generated on an insulator, (2) this charge is transferred to a conductor by contact or induction, and (3) the charged conductor comes near a metal object, usually grounded, and a discharge occurs.

For example, when you walk across a carpet, the soles of your shoes (insulators*) become charged as they contact and separate from the floor. This charge is then transferred to your body (a conductor). If you then touch a metallic object, grounded or not, a discharge occurs. When a discharge occurs to an ungrounded object (e.g., a doorknob), the discharge current flows through the capacitance between the object and ground.

Table 12-2 Typical Electrostatic Voltages

	Electrostatic Voltage	
Means of Static Generation	10 to 20% Relative Humidity	65 to 90% Relative Humidity
Walking across carpet	35,000	1500
Walking on vinyl floor	12,000	250
Worker moving at bench	6000	100
Opening a vinyl envelope	7000	600
Picking up common polyethylene bag	20,000	1200
Sitting on chair padded with polyurethane foam	18,000	1500

*Some shoes are static dissipative (e.g., those with leather soles).

A charged insulator by itself is not directly a problem. Since the charge is not free to move, it cannot produce a static discharge. The danger from an insulator comes from its potential for inducing a charge on a conductor. Static damage is done by conductors. The most important of these are metals, carbon, and people (due to the conductivity of their moist skin).

Inductive Charging

An electrically charged object (insulator or conductor) is surrounded by an electrostatic field. If a charged object is brought into the vicinity of a neutral conductor, the electrostatic field will cause the balanced charges on the neutral conductor to separate. The polarity of charge opposite to that on the charged body will be on the surface of the conductor nearest the charged body, and the opposite charge will be on the surface farthest away, as shown in Fig. 12-1. The conductor will remain neutral, however, with equal amounts of positive and negative charge.

If a temporary connection is then made to ground (e.g., if the object is momentarily touched by a grounded person or object), the charge on the side of the neutral body farthest away from the charged object will bleed off, as shown in Fig. 12-2. This leaves the conductor charged, without ever having come in contact with a charged body. The ground connection necessary to produce the induced charge can have considerable impedance (a megohm or more).

Charge Storage

The charge that accumulates on an object is stored in that object's capacitance. Normally we think of capacitance as something occurring between parallel plates. However, all objects have a free-space capacitance of their own, with the second plate in effect at infinity. This is the minimum capacitance that an object can have. The free-space capacitance of even an irregularly shaped object is primarily a function of its surface area. There-

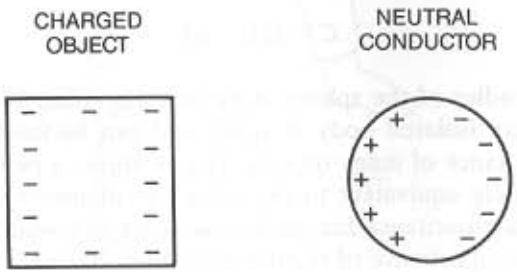

Figure 12-1. *The charge on a neutral conductor separates in the vicinity of a charged object.*

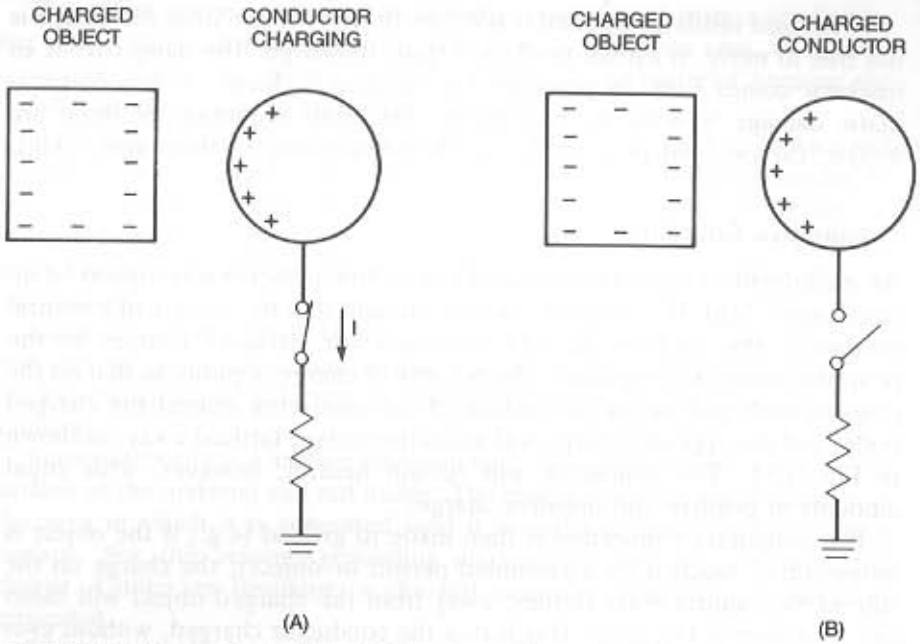

Figure 12-2. *If the conductor of Fig. 12-1 is momentarily grounded (A), the negative charge will bleed off and leave the conductor charged (B).*

fore the free-space capacitance can be approximated by considering the simple geometry of a sphere with the same surface area as the object.

The capacitance between two concentric spheres (Hayt, 1974, p. 159) is

$$C = \frac{4\pi\epsilon}{(1/r_1) - (1/r_2)}, \tag{12-2}$$

where r_1 and r_2 are the radii of the two spheres ($r_2 > r_1$), and ϵ is the dielectric constant of the region between the spheres.

For free space $\epsilon = 8.85 \times 10^{-12}$ F/m. If the radius of the outer sphere is allowed to go to infinity, Eq. 12-2 becomes

$$C = 111r \quad \text{pF}, \tag{12-3}$$

where r is the radius of the sphere in meters. Equation 12-3 represents the capacitance of an isolated body in space and can be used to estimate the minimum capacitance of many objects. For example, a person has a surface area approximately equivalent to that of a 1-m diameter sphere; therefore Eq. 12-3 gives a capacitance for the human body of about 50 pF. The earth has a free-space capacitance of slightly more than 700 μF, and an object the size of a marble has a free-space capacitance of slightly more than 1 pF.

Besides the capacitance given by Eq. 12-3, additional capacitance (parallel plate capacitance) exists due to the proximity of an object to other surrounding objects.

HUMAN BODY MODEL

Humans are a prime source of electrostatic discharge. A charged object readily transfers its charge to a person's conductive skin layer.

In addition to the 50 pF of free-space capacitance, the primary contribution to the capacitance of the human body comes from the capacitance between the soles of the feet and ground, as shown in Fig. 12-3. This is

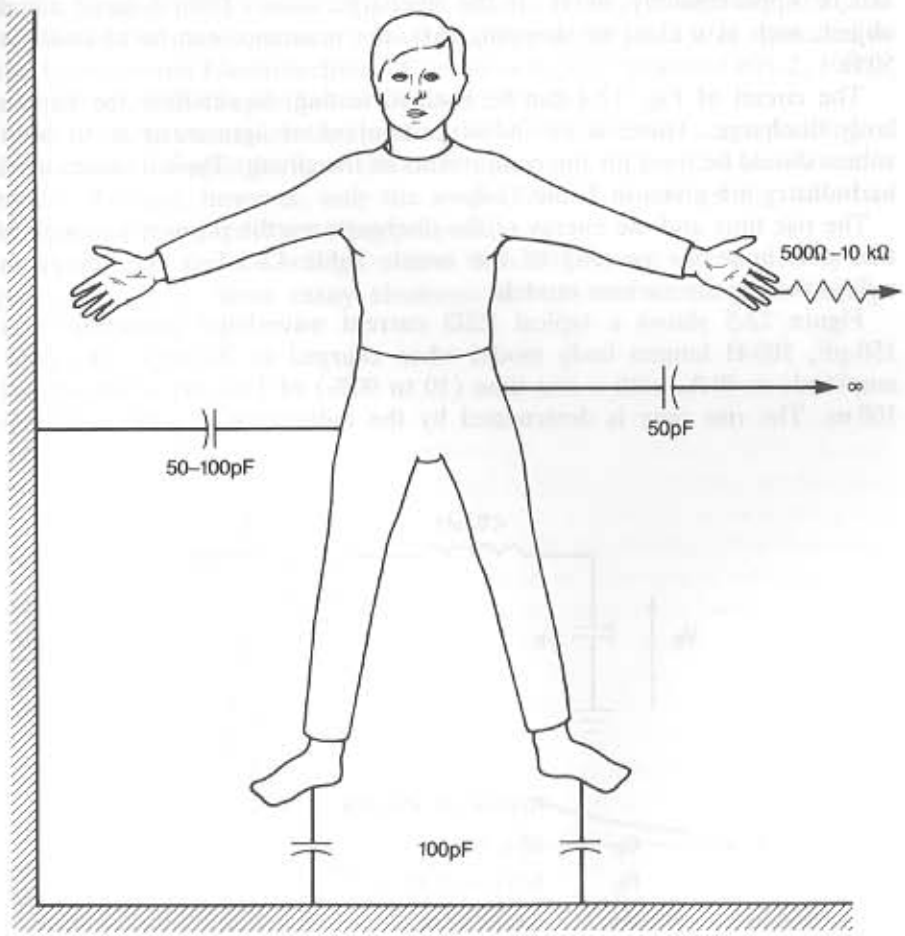

Figure 12-3. *Human body capacitance and resistance.*

typically 100 pF. An additional capacitance from 50 to 100 pF may exist due to the proximity of the person to some surrounding objects, such as walls. Therefore the capacitance of the human body is the combination of free-space capacitance plus parallel-plate capacitance, and it varies from about 50 to 250 pF.

A model for electrostatic discharge from a human body is shown in Fig. 12-4. The charge is stored in the body capacitance. The discharge occurs through a resistor, which represents the resistance of the body. The inductance, although often left out of the model, is important in determining the rise time of the discharge current and should be included.

The body resistance can vary from about 500 to 10,000 Ω, depending on which part of the body the discharge occurs. If the discharge is from the tip of the finger, the resistance will be about 10,000 Ω; if from the palm of the hand, about 1000 Ω; if from a metal object (e.g., a key) held in the hand, it will be approximately 500 Ω. If the discharge occurs from a large metal object, such as a chair or shopping cart, the resistance can be as small as 50 Ω.

The circuit of Fig. 12-4 can be used in testing, to simulate the human body discharge. There is no industry standard or agreement as to what values should be used for the components of the circuit. Typical values used by industry are given in Table 12-3.

The rise time and the energy of the discharge are the primary parameters that determine the severity of the event. Table 12-3 lists the energy in millijoules for the various models.

Figure 12-5 shows a typical ESD current waveshape produced by a 150-pF, 500-Ω human body model when charged to 20,000 V. The peak amplitude is 40 A, with a rise time (10 to 90%) of 1 ns and a fall time of 100 ns. The rise time is determined by the inductance in series with the

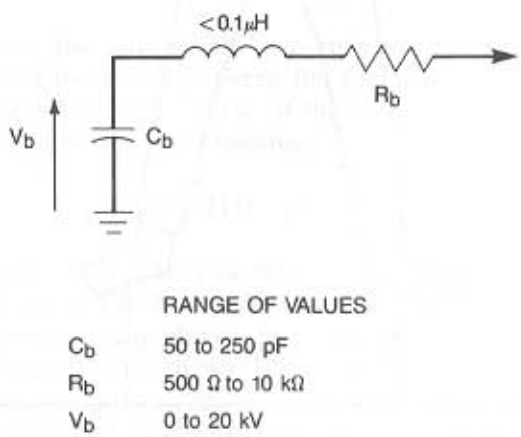

Figure 12-4. *Electrostatic discharge model of the human body.*

Table 12-3 Typical Human Body Model Component Values

Source	C (pF)	R (Ω)	V (volts)	Energy (mJ)
IEC 801-2	150	150	15,000	16.9
SAE	200	250	15,000	22.5
DOD-HDBK-263	100	1500	15,000	11.3
Company A	250	1000	20,000	50
Company B	150	500	20,000	30
Company C	50	10,000	20,000	10
Company D	300	500	15,000	33.8
Company E	350	100	15,000	39.4
Company F	100	500	10,000	5.0

discharge probe. Minimizing this inductance is one of the primary concerns in the design of ESD testers. Its value should be kept to less than 0.1 μH.

Two of the more commonly used models are 150 pF, 150 Ω, specified in the International Electrotechnical Commission (IEC Standard 801-2, 1984), and 100 pF, 1500 Ω specified in DOD-HDBK-263.

More elaborate models that produce multiple discharges corresponding to actual human discharges have also been proposed. Figure 12-6 shows such a model. To date, however, only the simple R–L–C model of Fig. 12-4 has been widely accepted for testing purposes.

A discharge from a voltage of less than 3500 V will not be felt by the person involved. Since many electronic devices are sensitive to damage

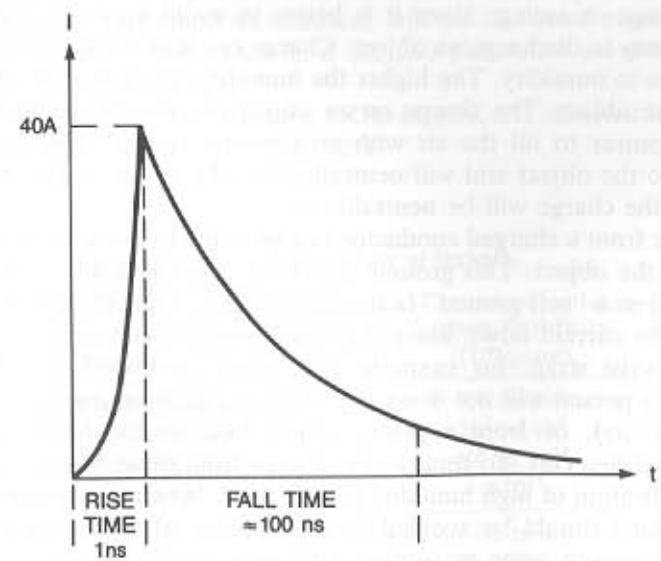

Figure 12-5. *Typical electrostatic discharge current waveform.*

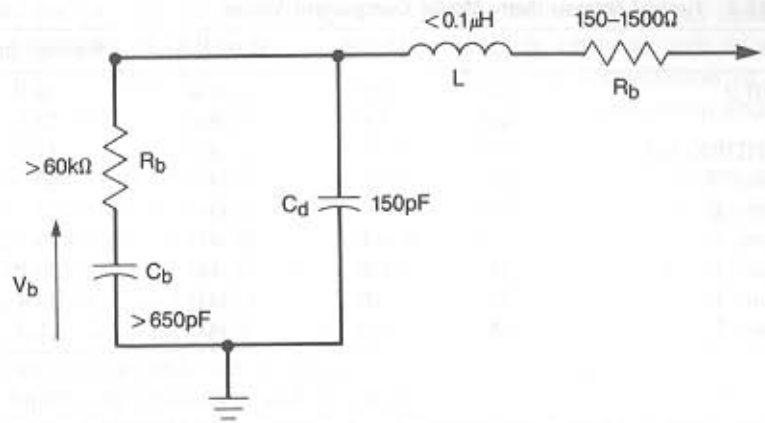

Figure 12-6. *Multiple discharge, human body model.*

from discharges of only a few hundred volts, component damage can occur from a discharge that is not felt, heard, or seen. At the other extreme, discharges at potentials greater than 25 kV are painful to the person involved.

STATIC DISCHARGE

Charge accumulated on an object usually leaves the object by one of two ways, leakage or arcing. Since it is better to avoid arcing, leakage is the preferred way to discharge an object. Charge can leak off an object through the air, due to humidity. The higher the humidity, the faster the charge will leak off the object. The charge on an object can also be counteracted by using an ionizer to fill the air with an opposite charge. The ions will be attracted to the object and will neutralize the charge on it. The more ions, the faster the charge will be neutralized.

Leakage from a charged conductor can be made to occur by intentionally grounding the object. This ground may be a "hard ground" (close to zero impedance) or a "soft ground" (a large impedance, typically a megohm, that will limit the current flow). Since the human body is conductive, grounding it with a wrist strap, for example, will drain off the charge. However, grounding a person will not drain the static charge from his or her clothing (nonconductors), or from a plastic object held in the hand, such as a Styrofoam coffee cup. To remove the charge from these objects, ionization or the application of high humidity can be used. When grounding a person, a hard ground should be avoided because of the safety hazard that would exist if the person came in contact with an ac power line. The minimum impedance used in grounding a person should be 250 K-Ω (wrist straps

usually have 1 MΩ of resistance to ground). The higher the impedance to ground, the longer it will take for the charge to bleed off the object.

Decay Time

Since the charge on an object may leak off over a period of time, an important parameter is the decay time—the time it takes for the charge to be reduced to a given percentage of its initial value. The decay time (sometimes called the relaxation time) is equal to

$$\tau = \frac{\epsilon}{\sigma}, \tag{12-4}$$

where ϵ is the dielectric constant for the material and σ is the conductivity (Moore 1973, p. 26, Eq. 15). The decay time can also be written in terms of the resistivity ρ of the material and is

$$\tau = \epsilon\rho . \tag{12-5}$$

From Eq. 12-5 we see that the decay time can be used as an indirect method of measuring the resistivity of a material.

Since static electricity is a surface phenomenon, materials can be classified by their surface resistivity. Surface resistivity has the dimensions of ohms per square. It is equivalent to the resistance measured across a square section of the material. Surface resistivity is measured with a fixture having two electrodes that form the opposite sides of a square. As long as the length of the measuring electrodes is the same as the spacing between the electrodes, the resistance measurment will be the same regardless of the length of the electrodes. That is, if the two electrodes are 1 in. long, they must be placed 1 in. apart.

Based on the surface resistivity, DOD-HDBK-263 classifies materials into four categories, as listed in Table 12-4.

Table 12-4 Surface Resistivity of Various Classes of Materials

Material	Surface Resistivity (Ω/Square)
Conductive	0 to 10^5
Static dissipative	10^5 to 10^9
Antistatic[a]	10^9 to 10^{14}
Insulative[a]	$>10^{14}$

[a]A surface resistivity of 10^{14} is high for the transition from antistatic to insulative. A more realistic value would be 10^{12} Ω/square.

Materials with surface resistivities of $10^9\ \Omega$ per square or less can be discharged rapidly by grounding. If a charge already exists on an object, it should be discharged slowly in order to limit the current and avoid damage.

Conductive materials are the fastest to dissipate charge and can be dangerous when used near an already charged device. If a charged device should come in contact with a grounded conductive material, it will be rapidly discharged with a large peak current, and damage may result.

Static-dissipative materials are preferred to conductive materials because charge dissipation occurs at a slower, safer rate. Grounded static-dissipative materials can be used to prevent charge buildup and to safely discharge objects already charged.

Antistatic materials are the slowest to dissipate charge. Nevertheless, they are useful because they can dissipate charge faster than it is generated and therefore prevent an object from accumulating a charge. An example of this is a pink polyethylene bag. To prevent triboelectric charging the surface resistivity of the material should not exceed $10^{12}\ \Omega$/square.

Neither static-dissipative nor antistatic materials will charge when separated from themselves or any other materials. They have similar applications and are sometimes grouped together. They are the preferred materials to use in an ESD-sensitive environment.

Insulators do not dissipate charge but retain whatever charge they have. Examples are a polyethylene bag and Styrofoam packing material. They should not be allowed in an ESD-sensitive environment.

ESD PROTECTION IN EQUIPMENT DESIGN

Energy from a static discharge can be coupled to an electronic circuit in three ways:

1. By direct conduction.
2. By capacitive coupling.
3. By inductive coupling.

Direct conduction occurs when the discharge current flows directly through the sensitive circuit. This often results in damage to the circuit. Capacitive and inductive couplings occur when there is a discharge to a nearby metal object or cable, and the resulting fields are coupled to the susceptible circuit.

A circuit or system may be protected from a static discharge by

1. Eliminating the static buildup on the source.
2. Insulating the product to prevent a discharge.

3. Providing an alternative path for the discharge current to bypass the circuit.
4. Shielding the circuit against the electric fields produced by the discharge.
5. Protecting the circuit against the magnetic fields produced by the discharge.

Most of what has been written on the subject of ESD discusses methods of preventing charge buildup and/or preventing a discharge from occurring (items 1 and 2 of the list). Although these methods are useful in protecting a system from ESD damage in the process of manufacturing, handling, and shipping, they cannot be forced on the users of the product.

ESD-induced effects in electronic circuits can be divided into three categories: hard errors, soft errors, and transient upset. Hard errors cause actual damage to the hardware (e.g., destruction of an IC). Soft errors affect system operation but do not physically damage it (e.g., a changed memory bit or a program locked in an infinite loop). Transient upset does not cause an error, but it is perceptible (e.g., snow, rolling of a CRT display, or the momentary flashing of an indicator light). Electronic products and systems should be designed to tolerate an electrostatic discharge without damage (hard error) and often without soft error. Transient upsets are usually tolerated.

The first step in designing equipment to be immune to ESD is to prevent the direct discharge current from flowing through the susceptible circuits. This can be accomplished either by insulating the circuit or by providing an alternative path for the current flow. If insulation is used, it must be complete, since a spark will jump across an air gap at a discontinuity, such as the air gap between the plastic keys of a keyboard.

In order to divert the ESD current from sensitive circuits, *all exposed metallic components of the system must be grounded*. Since the discharge current follows a path that is dependent on the physical layout of the product, the number and location of metallic structures and their ground ties are very important.

The basic principle of ESD-protective grounding is to use low inductance multipoint grounds where ESD current flow is desired and single-point grounds where discharge current flow is not wanted.

In the case of a grounded metallic enclosure, the housing can be used to divert the discharge current to ground. To be effective, the case must be electrically continuous; otherwise, a portion of the current may be forced to flow through the internal circuitry, as shown in Fig. 12-7. Good high-frequency electrical continuity (multipoint) must be provided across all joints, hinges, and so forth. For an ungrounded or improperly grounded system, the ESD current paths are complex and unpredictable, flowing through the capacitance among the parts of the system and between the system and its environment.

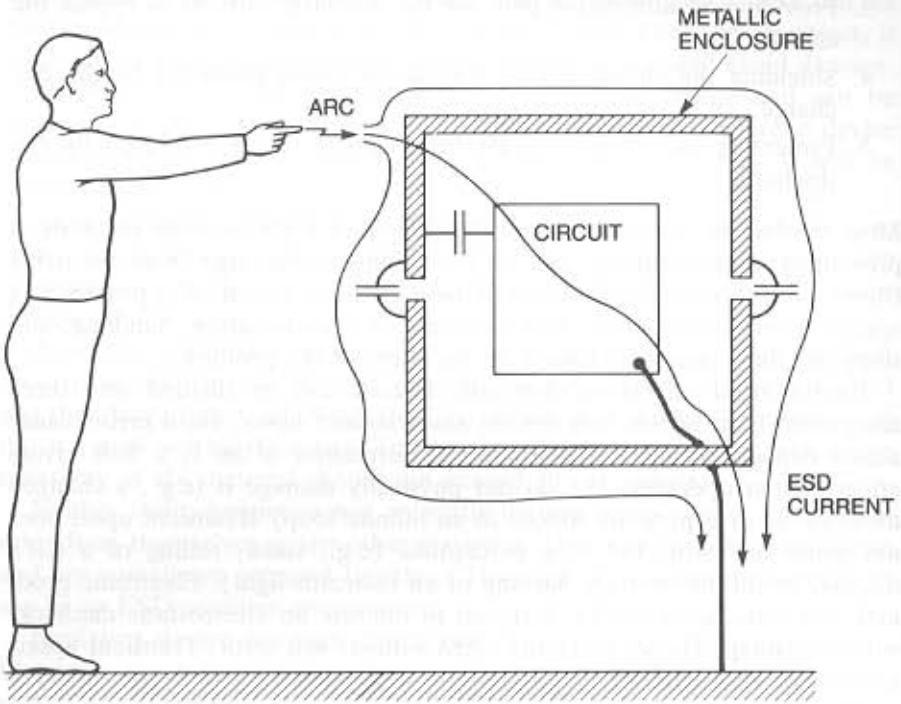

Figure 12-7. *Electrostatic discharge to a metallic enclosure that does not have electrical contact across the seams.*

Metallic Enclosures

Consider the situation shown in Fig. 12-8 of a circuit insulated from and completely enclosed by a grounded metal box. The circuit has no connection to anything outside the metallic enclosure. When a discharge occurs to the box, the box rises in potential due to the inductance of the ground lead. In the case of a 20,000-V discharge, the box may rise in potential by a few thousand volts. The circuit inside the box also rises to a few thousand volts with the box, so there are no potential differences between points of the circuit or the circuit and the box. No damage will be done, provided the box completely encloses the circuit.

Discontinuities in the enclosure (e.g., seams or holes) can cause differential voltages to appear on the enclosure. These voltages, combined with the parasitic capacitance between the portions of the enclosure and the circuit, can produce voltages in the circuit that may affect its operation. There are two approaches to solving this problem. The first is to make the enclosure as complete as possible. The second is to add an internal shield to block the capacitive-coupling between the enclosure and the circuit. This second shield should be connected to the circuit common, as shown in Fig. 12-9.

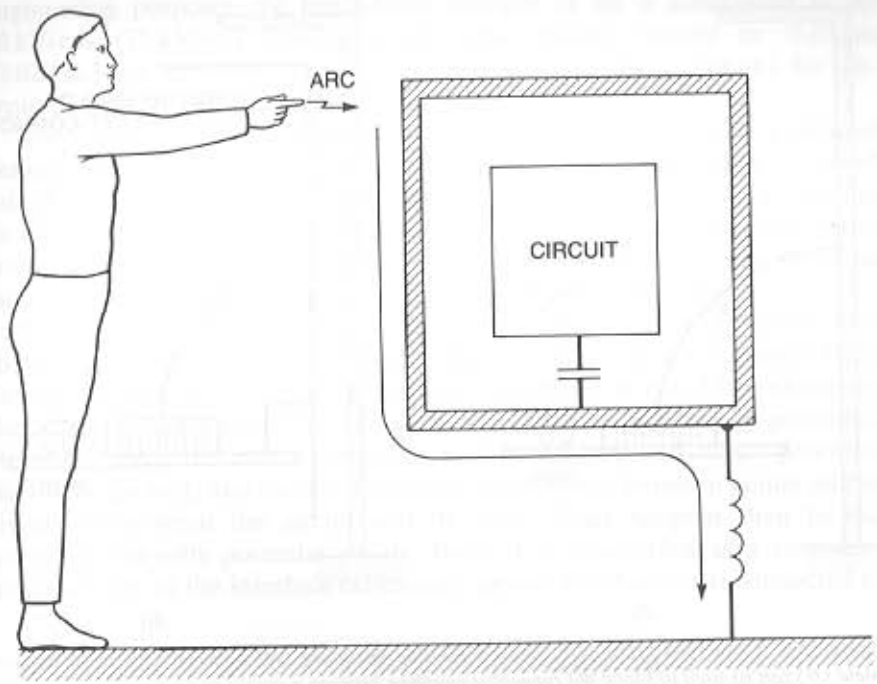

Figure 12-8. *Electrostatic discharge to a metallic enclosure that completely encloses a circuit. The circuit has no external connections.*

A more practical case is shown in Fig. 12-10, where the enclosed circuit has a connection to an outside ground either through a cable (I/O or power) or through capacitance to ground (as the result of holes or discontinuities in the enclosure). When a discharge occurs to the box, the box rises in potential. The circuit, however, due to the external ground connection, will remain at the ground or close to it. There is now a large potential difference between the box and the circuit, and this may cause a secondary arc to occur between them. This secondary arc occurs without the current-limiting body resistance and produces currents much larger, and more destructive than the primary arc.

A similar effect occurs if the metallic enclosure is ungrounded. However, instead of rising to a few thousand volts, as in the case of a grounded enclosure, the enclosure may rise close to the potential of the source. Therefore all exposed metal parts should be grounded to the green wire ac power ground to limit this voltage rise.

The secondary arc can be prevented by providing sufficient space between all metal parts and the circuit or by connecting the circuit to the metallic enclosure. The gap should be able to withstand about 1500 V for a grounded enclosure and at least 25,000 V for an ungrounded enclosure. For

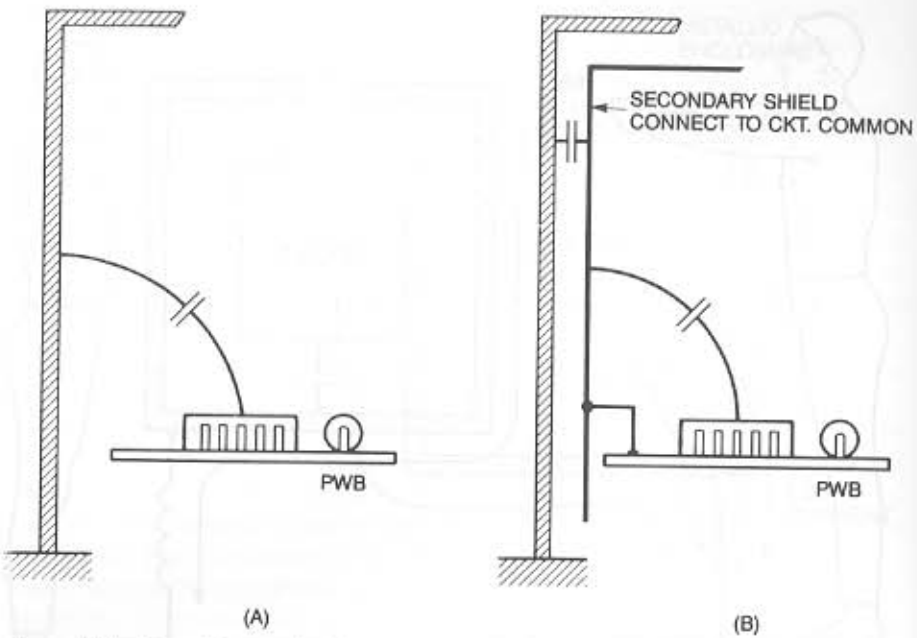

Figure 12-9. *Capacitive coupling between a metallic enclosure and a circuit (A). A secondary shield (B) can be used to block the capacitive coupling between a circuit and a metallic enclosure.*

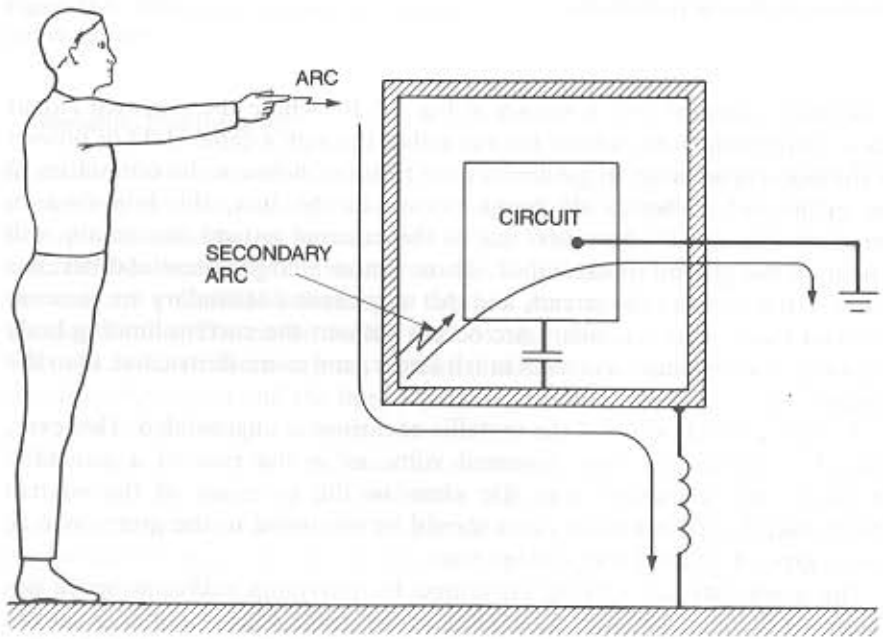

Figure 12-10. *Electrostatic discharge to a metallic enclosure containing a circuit with an external ground connection.*

engineering purposes the breakdown strength of air is considered to be 30 kV/cm (75 kV/in.); therefore minimum spacing should be 0.05 cm (0.020 in.) for grounded metal parts, and 0.84 cm (about 3/8 in.) for ungrounded metal parts.

Even without the secondary arc, the strong electric field produced between the metal box and the circuit can cause a problem. Often a second shield inside the metal box will be needed to break the electric field coupling to the circuit. This second, unexposed shield should be connected to the circuit ground, as was shown in Fig. 12-9. This could be a separate shield or part of a ground plane on an existing printed wiring board.

If the circuit is connected to the metallic enclosure, this connection should be made at one point only to prevent the discharge currents from flowing through the circuit. The configuration shown in Fig. 12-11 illustrates the result. When a discharge occurs to the box, the box rises in potential. However, since the circuit ground is tied to the box, the circuit potential rises with the box, and there is no potential difference between points on the circuit or between the circuit and the box. What happens then to the few-thousand-volts potential on the box? It is transferred as a common-mode voltage to the interface cables and applied to whatever is connected at

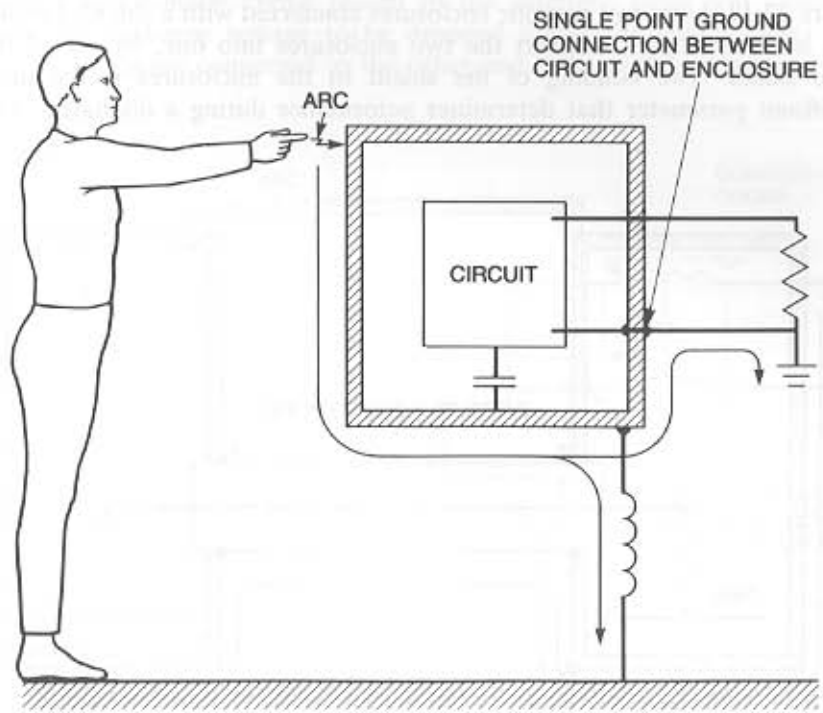

Figure 12-11. *Electrostatic discharge to a metallic enclosure containing a circuit with a single-point connection between the enclosure and the circuit.*

the other end of the cables. Therefore the problem is transferred from the circuit in the enclosure to the circuit at the other end of the cables. If the cable is the ac power line, momentarily applying a few thousand volts into it will not do any harm. But, if the cable is a signal cable connected to a logic gate, the gate will be damaged.

The situation can also be reversed, with the discharge applied to the circuit at the end of the cable and the damage done to the circuit inside the box. For a complete conductive enclosure, which is connected to the circuit ground at one point, the primary ESD problem involves the interface cables. These cables must be treated to prevent ESD damage.

Input/Output Cable Treatment

Interface cables can be protected from ESD by the following methods:

1. Use of cable shielding.
2. Common-mode chokes.
3. Overvoltage clamping devices.
4. Cable bypass filters.

Figure 12-12 shows two metallic enclosures connected with a shielded cable. This is an attempt to convert the two enclosures into one, by use of the cable shield. The bonding of the shield to the enclosures is the most significant parameter that determines peformance during a discharge. The

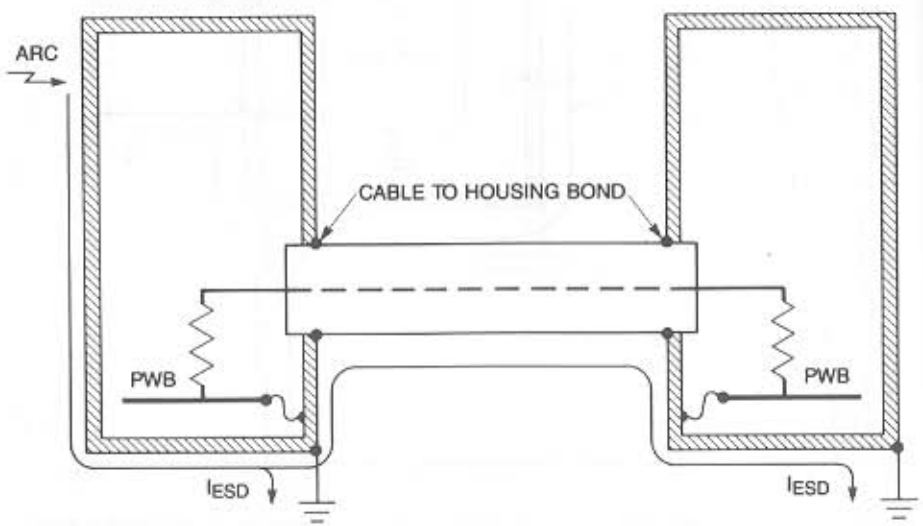

Figure 12-12. *Two enclosures connected with a shielded cable, in an attempt to turn the two into one continuous enclosure.*

Table 12-5 The Effect of Shield Termination on ESD-Induced Voltage (from Palmgren, 1981)

Shield Termination Method	Induced Signal Voltage
No shield, or shield not connected to cabinet	>500
Drain wire ground connection	16
Shield soldered to connector; connector in contact with cabinet through jack screws only	2
Shield soldered to connector; a 360° contact between connector and cabinet	1.25
Shield clamped directly to cabinet with a 360° contact (no connector)	0.6

data shown in Table 12-5 are from Palmgren (1981) and list the voltage measured between the cable signal conductor and ground in one box when a 10,000 V discharge occurs to the other box. In all cases the shield has a 360° bond to the box where the discharge occurs, whereas the shield termination on the other end is varied.

A common-mode choke placed in the interface cable will cause the transient discharge voltage to be dropped across the choke rather than across the circuit connected to the other end. This is shown in Fig. 12-13.

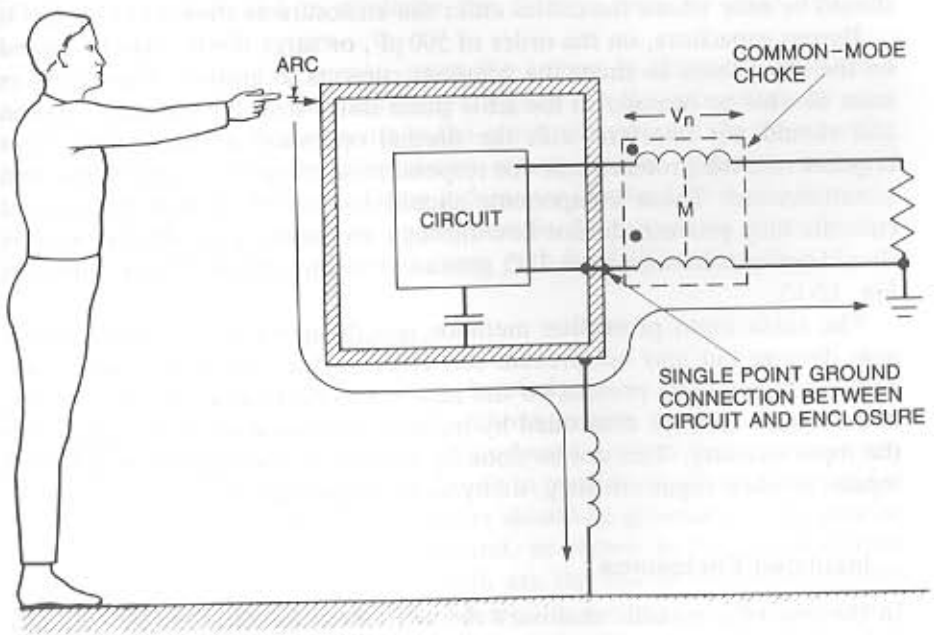

Figure 12-13. *A common-mode choke can be used on the interface cable to drop the ESD-induced noise voltage (V_N).*

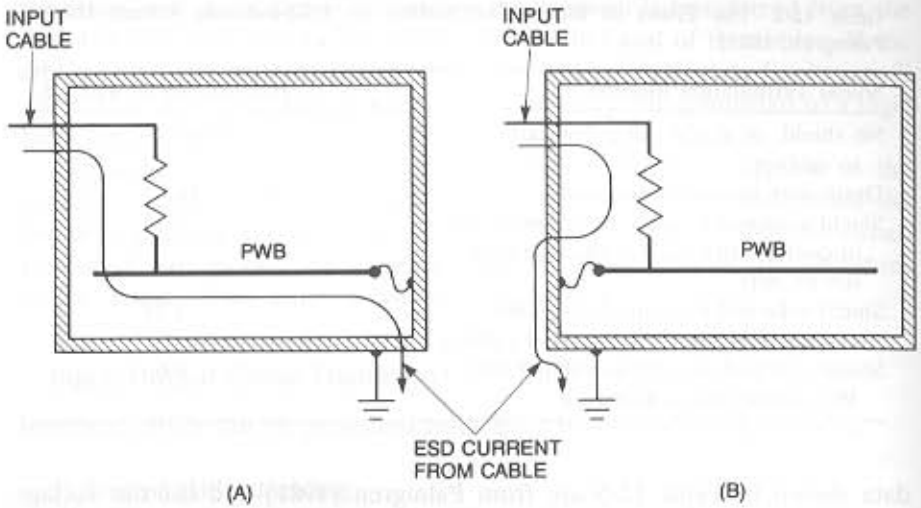

Figure 12-14. *Improper connection between PWB and chassis (A) forces ESD currents on cables to flow through the PWB. Proper connection (B) diverts ESD current from PWB.*

Due to the fast rise time of the ESD pulse, stray capacitance across this choke must be minimized in order for it to be effective (see Chapter 3 for a discussion of the effect of stray capacitance across a common-mode choke). When the circuit is connected to the enclosure at only one point, this point should be near where the cables enter the enclosure as shown in Fig. 12-14.

Bypass capacitors, on the order of 500 pF, or surge diodes may be placed on the input leads to shunt the transient currents to ground. These devices must be able to respond to the ESD pulse faster than the protected system and should not interfere with the normal operation of the system. This requires that the protective device respond to a voltage transient in less than a nanosecond. These components should be placed so that the ground currents they produce do not flow through the circuit ground; that is, they should connect to a separate I/O ground or to the chassis. This is shown in Fig. 12-15.

The cable input protection methods just discussed will prevent component damage but may not prevent soft errors or transient upset, since noise voltages may still be present on the inputs. In order to prevent soft errors, noise signals must be controlled by building additional noise immunity into the input circuitry. This can be done by additional filtering, use of balanced inputs, strobed input circuitry, or by software design.

Insulated Enclosures

In the case of a metallic enclosure the chassis or enclosure is used as a low inductance path to route the ESD current around the internal circuitry. In

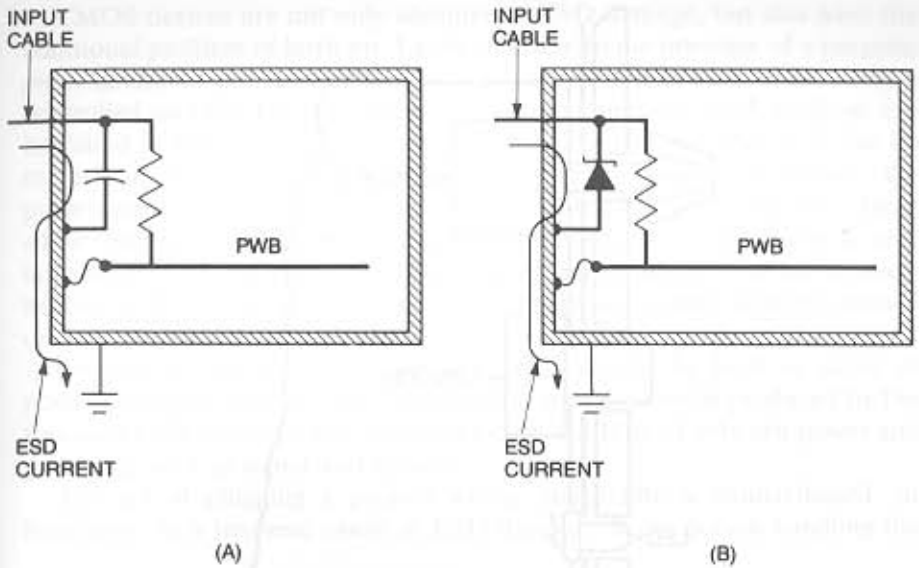

Figure 12-15. *A capacitor (A) or surge diode (B) can be used to bypass the ESD current from the cable to ground.*

the case of a nonmetallic enclosure this low inductance path does not exist, which makes ESD more difficult to control. Circuit ground can be used in place of chassis ground to minimize the damage done by ESD, but this usually results in soft errors.

If all cables, including power, enter the system in the same area and a separate I/O ground plane is used (see Chapter 11), this ground can be used to bypass the ESD cable currents to the green wire ground. In this case the techniques used for the metallic chassis are applicable, although they will not be as effective, due to the larger inductance involved. It is an advantage to have a large metal structure somewhere in the system to act as both a reference potential and a low inductance path for ESD current flow.

Keyboards and Control Panels

Keyboards and control panels must be designed in such a way that a discharge can go directly to ground without passing through the sensitive electronics. In the case of an insulated keyboard a metal spark arrester can be placed between the keys and the circuit to provide an alternative path for the discharge current. This spark arrester should be grounded to the case or frame ground, and not to circuit ground, as shown in Fig. 12-16. Other protection methods shown in Fig. 12-16 are the use of an insulated shaft and/or a large knob to prevent a discharge to a control or potentiometer and the use of an insulator over the keyboard, with no air gaps.

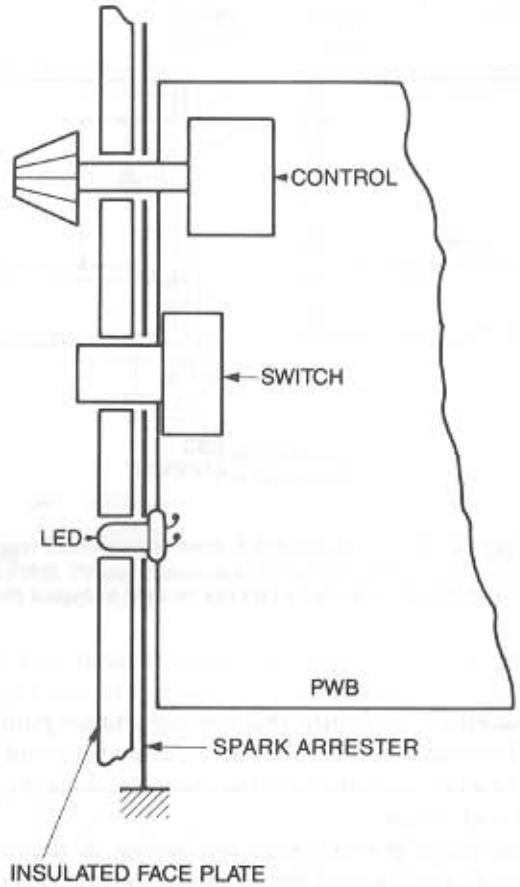

Figure 12-16. *Metallic spark arrestor placed behind an insulated face plate to divert the ESD current to ground.*

Circuit Design and Board Layout

Edge-triggered inputs are very susceptible to the transients caused by ESD; therefore inputs should not be edge triggered but strobed and latched. This way only a coincidence between the ESD event and the strobe can cause an error.

It is best to avoid printed wiring board layouts that bring sensitive MOS device leads directly to connector pins that are prone to ESD. If sensitive leads are connected to connector pins, protection can be provided by adding series resistance, shunts, or voltage clamps to these leads or by buffering them with less ESD-sensitive logic families. Additional protection to MOS devices can be provided by adding series resistance to the inputs. Most CMOS gates can tolerate 1000 Ω or more of series-input resistance.

CMOS devices are not only sensitive to ESD damage, but also have the additional problem of latch-up. Latch-up is due to the presence of a parasitic *pnpn* device to the substrate. This *pnpn* device can behave like a silicon-controlled rectifier (SCR). Additional information on CMOS latch-up can be found in RCA application note ICAN-6525. The parasitic SCR can be turned on by an input or output voltage transient that is outside the power-supply voltage levels. The SCR can also be turned on by a large dV/dt on the power supply. Once latch-up occurs, it produces a low-impedance path between the power supply and ground, resulting in over-heating and possibly device failure. Once the parasitic *pnpn* device is turned on, the only way to turn it off is to remove power.

On printed wiring boards all loop areas should be kept as small as possible because they are susceptible to the magnetic fields produced by the transient ESD currents. This includes loop areas formed between power and ground as well as signal and ground.

The act of plugging a printed wiring board into a mother-board, or backplane, is a frequent cause of ESD damage. If the person handling the

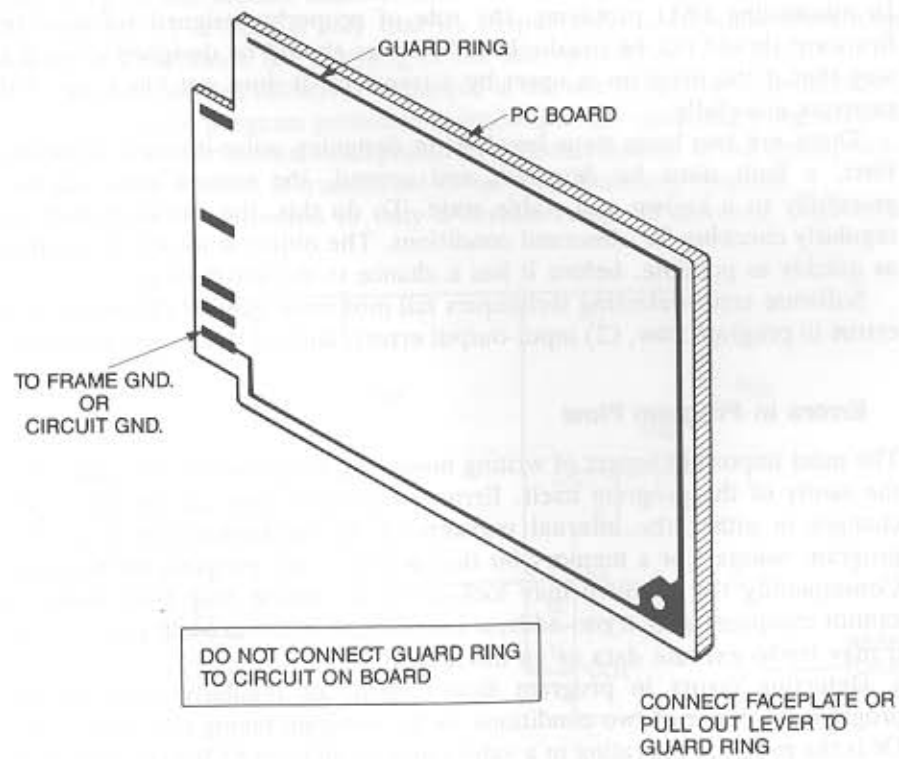

Figure 12-17. *Guard ring on PWB used to protect board from ESD damage when board is handled and subsequently plugged into the system.*

board has acquired a static charge, it is transferred to the traces on the board; then when the connector makes contact, a discharge occurs. This problem can be minimized by using a guard ring around the board as shown in Fig. 12-17. If the board is handled carefully by the edges or the faceplate, the person's charge is transferred to the guard ring since this is the closest conductor to the hand. When the connector makes contact, the discharge occurs through the guard ring and not through the circuitry on the board. The spacing between the guard ring and any other circuitry on the board should be a minimum of 0.05 cm (0.02 in.) to prevent a voltage breakdown when the guard ring rises in potential, as the discharge current flows through its inductance.

The guard ring is also useful in protecting a board after it is plugged into the system. If a charged person or object comes close to the board's periphery, any discharge that occurs will most likely be to the grounded guard ring and not to the circuitry on the board.

SOFTWARE AND ESD PROTECTION

In minimizing ESD problems, the role of properly designed software or firmware should not be overlooked. Software should be designed in such a way that if the program is upset by a transient, it does not "lock up" but recovers gracefully.

There are two basic steps involved in designing noise-immune software. First, a fault must be detected, and second, the system must recover gracefully to a known and stable state. To do this, the software must be regularly checking for abnormal conditions. The object is to detect an error as quickly as possible, before it has a chance to do any damage.

Software error-detecting techniques fall into three general categories: (1) errors in program flow, (2) input-output errors, and (3) data memory errors.

Errors in Program Flow

The most important aspect of writing noise-tolerant software is to guarantee the sanity of the program itself. Errors in program flow can be caused by changes in either the internal registers of the microprocessor (e.g., the program counter) or a memory bit that is part of the program instructions. Consequently the problem may lock-up in an infinite loop from which it cannot escape, it may try to address instructions in nonexistent memory, or it may try to execute data as an instruction.

Detecting errors in program flow consists of regularly checking the program for either of two conditions: Is the program taking too much time? Or is the program operating in a valid range of memory? Checking for these conditions is not difficult and may only require a few extra lines of code in the program. Some of the techniques for checking include hardware timers,

software checkpoints, error traps, "no-op" codes, and the trapping of unused interrupts.

The most effective protection against the infinite loop is an external hardware timer. An external hardware counter connected to the system clock is configured to count up to a specified number and then reset the microprocessor. The software is designed to reset the timer by periodically sending a sanity pulse, which prevents the counter from ever reaching its final count unless the system is locked in an infinite loop. Often the sanity pulse code can be added to an existing subroutine that is constantly used by the main program with only a few extra instructions.

A retriggerable monostable multivibrator may also be used as a sanity timer, as shown in Fig. 12-18. The timing on the first multivibrator (R_{x1} and C_{x1}) is set to be much longer than the time between sanity pulses from the microprocessor. Under normal operation this multivibrator is retriggered by the sanity pulse before it times out. This input must be edge triggered, not level triggered, since it may be possible for the sanity signal to lock up in either a high or low state.

If the sanity pulse is not received in time, the first multivibrator times out and triggers the second multivibrator. The second multivibrator is timed (R_{x2} and C_{x2}) in such a way that its output pulse is of a duration long enough to guarantee the resetting of the microprocessor.

Another, but less effective, technique is the use of software checkpoints. Here a separate program periodically interrupts the operating program and checks to see that certain checkpoints have been reached. If the checkpoints are incorrect, control is transferred to an error-handling program.

If a program is limited to only a certain range of memory, such as a

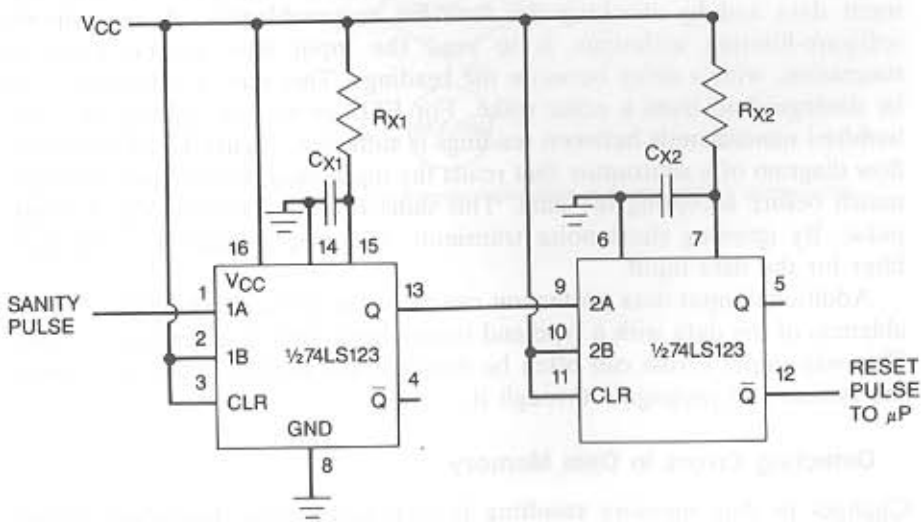

Figure 12-18. *A hardware sanity timer made from a dual retriggerable multivibrator.*

program in ROM, traps can be written into the software to prevent the program from trying to access instructions outside the valid range of memory. Unused program memory locations should be filled with "no-op" (or similar) instructions with a jump to an error-handling routine at the end. This way, if an inadvertent jump to unused or nonexistent memory occurs, the error-handling routine will be called.

Unused microprocessor interrupts are often the source of program-flow errors. If a noise transient appears on an unused interrupt, it will force a jump to an interrupt vector location. If this location is in the middle of a program, unpredictable results can occur. The solution to this problem is to put a jump to an error-handling routine in all unused interrupt vector locations.

Once an error in program flow is detected, it becomes necessary to get the system back to a known and stable state, with as little damage as possible. This is accomplished by transferring control to an error-handling routine. The simplest routine is a system reset. In some instance, however, this brute force approach is unacceptable.

Error recovery consists of assessing the damage and then repairing the program as necessary. How this can be done depends on the specific system in question and cannot be discussed in general.

Detecting Errors in Input/Output

Transient errors in the input or output can cause incorrect information to be communicated in or out of the system. Output errors can be detected by echoing (reading back) the output and comparing the data to those that were sent.

Input errors can be controlled by software filtering (de-bouncing) the input data and by checking the data for reasonableness. A very simple software-filtering technique is to read the input data several times in succession, with a delay between the readings. This way, a valid input can be distinguished from a noise spike. For ESD protection a delay of a few hundred nanoseconds between readings is sufficient. Figure 12-19 shows the flow diagram of a subroutine that reads the input until N successive readings match before accepting the data. This same routine also produces a sanity pulse. By ignoring short noise transients, the program acts as a low-pass filter for the data input.

Additional input data protection can be provided by checking the reasonableness of the data with a type and range check, before accepting the data. This way, input errors can often be detected and flagged before they enter the system and propagate through it.

Detecting Errors in Data Memory

Changes in data memory resulting from induced noise transients seldom have immediate effect. However, left undetected, these errors can affect the

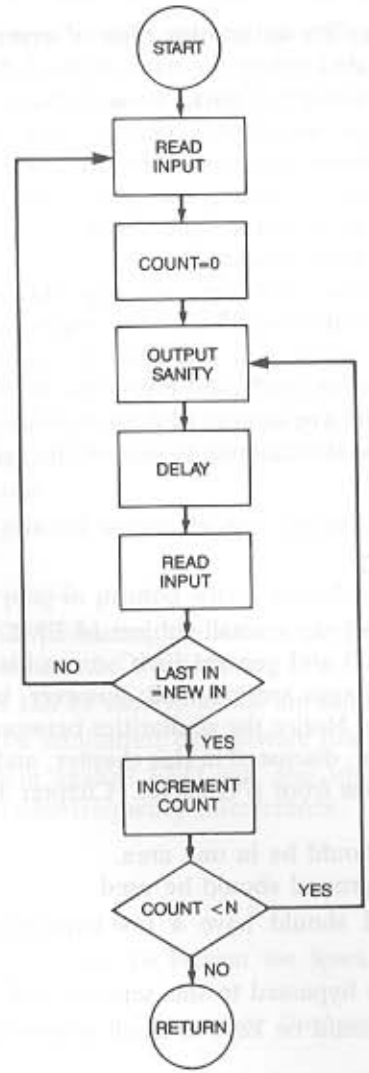

Figure 12-19. *Software subroutine for filtering input data and outputting a sanity pulse.*

system at a later time. To detect this type of error, all data taken from memory must be validated before the data are used. Many useful techniques exist for checking the validity of data. Some of these are the use of a parity bit, checksums, cyclical redundancy checks, and use of error-correcting codes. Most of these techniques detect the presence of an error but cannot correct it. For example, by adding one parity bit per data word, all odd number bit errors can be detected. The system uses this information to flag the data and question their validity.

Error-correcting codes, however, are capable of both detecting and correcting certain types of errors. This is accomplished by adding extra data bits to each memory word. For example, by adding six extra bits per sixteen-bit word, single- or double-bit errors can be detected, and single-bit errors can be corrected. The degree of data memory protection required is something that must be determined as part of the system specifications.

ESD VERSUS EMC

ESD is a special case of the overall subject of EMC control. The primary difference between ESD and general EMC control is that with ESD much larger currents and voltages are involved; however, both can be controlled by the same techniques. Notice the similarities between the methods used to provide ESD protection, discussed in this chapter, and those used to control common-mode emissions from I/O cables (Chapter 11):

1. All I/O cables should be in one area.
2. A separate I/O ground should be used.
3. The I/O ground should have a low-impedance connection to the earth.
4. Cables should be bypassed to this separate I/O ground.
5. All loop areas should be kept as small as possible.

A system properly designed for ESD control will usually perform well with respect to EMC susceptibility. Furthermore ESD testing can often be used to find flaws in the EMC design of a product (Mardiguian, 1985).

SUMMARY

- ESD protection should be part of the original system design.
- ESD hardening of a system involves the electrical, mechanical, and software design of a system.
- All exposed metal must be grounded to chassis ground.

- Keyboards and control panels must be carefully designed to tolerate a static discharge.
- Multipoint ground should be used where ESD current flow is desired, and single-point ground should be used where discharge current flow is not acceptable.
- Secondary shields may be needed between sensitive circuits and the chassis to prevent capacitive coupling from upsetting the circuit.
- Inputs should not be edge triggered but latched and strobed.
- Layouts that put sensitive MOS leads directly to connector pins should be avoided.
- All cables must be treated for ESD protection.
- If shielded cables are used, 360° contact with the shield is essential.
- Cable bypassing must be done to the chassis or a separate I/O ground, not to circuit ground.
- Loop areas on printed wiring boards should be kept as small as possible.
- A guard ring on plug-in printed wiring boards should be provided.
- In minimizing ESD problems, the role of properly designed software, or firmware, should not be overlooked.
- A hardware timer can be used to check the sanity of a microprocessor.
- Input errors can be minimized by software filtering.
- Hardening a system against ESD will also make it immune to most other sources of radio-frequency interference.

BIBLIOGRAPHY

Anderson, D. C. "ESD Control: To Prevent the Spark That Kills." *Evaluation Engineering*, July 1984.

Bhar, T. N., and McMahon, E. J. *Electrostatic Discharge Control*. Hayden Book Co., New York, 1983.

Calvin, H., Hyatt, H., and Mellberg, H. "A Closer Look at the Human ESD Event." EOS/ESD Symposium, 1981.

DOD-HDBK-263. "Electrostatic Discharge Control Handbook." Department of Defense, May 2, 1980.

Gerke, D., and Kimmel, W. "Designing Noise Tolerance into Microprocessor Systems." *EMC Technology*, March–April 1986.

Hayt, W. H. *Engineering Electromagnetics*. McGraw-Hill, New York, 1974.

IEC Specification 801-2, 1984.

Jowett, C. E. "Electrostatics in the Electronics Environment." Halsted Press, New York, 1976.

King, W. M., and Reynolds, D. "Personnel Electrostatic Discharge: Impulse Waveforms Resulting from ESD of Humans Directly and through Small Hand-

Held Metallic Objects Intervening in the Discharge Path." IEEE EMC Symposium Record, 1981.

Kutzavitch, W. G. "A Tutorial on Equipment Effects of Electrostatic Discharge." Unpublished paper, 1982.

Mardiguian, M. "The ESD Simulator, an EMI Engineer's Multi-Faceted Friend." *EMC Technology*, January–March 1985.

Mardiguian, M. "Electrostatic Discharge." Interference Control Technologies, 1986.

Moore, A. D."Electrostatics and its Applications." Wiley, New York, 1973.

Palmgren, C. M. "Shielded Flat Cables for EMI and ESD Reduction." IEEE Symposium on EMC, 1981.

RCA Integrated Circuit Application Note ICAN-6525. "Guide to Better Handling and Operation of CMOS Integrated Circuits."

Wong, S. W. "ESD Maturity Test for a Desktop Digital System." *Evaluation Engineering*, October 1984.

APPENDIX A THE DECIBEL

One of the most commonly used, but often misunderstood, terms in the field of electrical engineering is the decibel, abbreviated dB. The decibel is a logarithmic unit expressing the ratio of two powers. It is defined as

$$\text{Number of dB} = 10 \log \frac{P_2}{P_1} . \tag{A-1}$$

The unit can be used to express a power gain ($P_2 > P_1$) or loss ($P_2 < P_1$).

Since the definition of the decibel involves logarithms, it is appropriate to review some of their properties. The common logarithm Y of a number X is the power to which 10 must be raised to equal that number. Therefore, if

$$Y = \log X , \tag{A-2}$$

then

$$X = 10^Y \tag{A-3}$$

Some useful identities involving logarithms are

$$\log AB = \log A + \log B , \tag{A-4}$$

$$\log \frac{A}{B} = \log A - \log B , \tag{A-5}$$

$$\log A^n = n \log A . \tag{A-6}$$

USING THE DECIBEL FOR OTHER THAN POWER RATIOS

It has become common practice to use dB to express voltage or current ratios. The commonly used definitions for voltage and current ratios expressed as dB are

$$\text{dB voltage gain} = 20 \log \frac{V_2}{V_1} , \tag{A-7}$$

$$\text{dB current gain} = 20 \log \frac{I_2}{I_1} . \tag{A-8}$$

These equations are only correct when both voltages, or both currents, are measured across equal impedances. Common usage, however, is to use the definitions in Eqs. A-7 and A-8 regardless of the impedance levels.

The relationship between voltage gain and power gain can be determined by referring to Fig. A-1. The power into the amplifier is

$$P_1 = \frac{V_1^2}{R_1} . \tag{A-9}$$

The power out of the amplifier is

$$P_2 = \frac{V_2^2}{R_2} . \tag{A-10}$$

The power gain G of the amplifier, expressed in dB is

$$G = 10 \log \frac{P_2}{P_1} = 10 \log \left(\frac{V_2}{V_1}\right)^2 \frac{R_1}{R_2} . \tag{A-11}$$

Using the identities of Eqs. A-4 and A-6, Eq. A-11 can be rewritten as

$$G = 20 \log \frac{V_2}{V_1} + 10 \log \frac{R_1}{R_2} . \tag{A-12}$$

Comparing Eq. A-12 with A-7 shows that the first term of the power gain is the voltage gain, as defined in Eq. A-7. If $R_1 = R_2$, then both the voltage gain and the power gain, expressed in dB, are numerically equal. The values of resistances R_1 and R_2 must be known, however, to determine the power gain from a given voltage gain.

In a similar manner, the power gain of the circuit in Fig. A-1 can be expressed as

$$G = 20 \log \frac{I_2}{I_1} + 10 \log \frac{R_2}{R_1} . \tag{A-13}$$

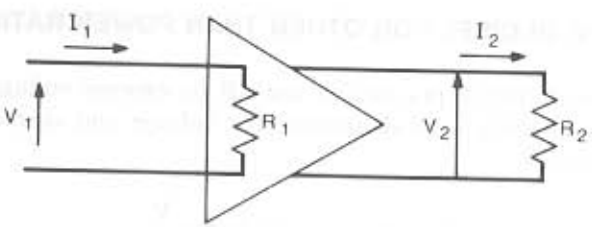

Figure A-1. *Circuit for comparing power gain and voltage gain.*

Notice that in this case the resistance ratio is the reciprocal of that in Eq. A-12.

Example A-1. A circuit has a voltage gain of 0.5, an input impedance of 100 Ω, and a load impedance of 10 Ω. From Eq. A-7 the dB voltage gain is −6 dB. From Eq. A-12

$$\text{dB power gain} = -6 + 10 \log \frac{100}{10} = 4 \quad \text{dB} . \tag{A-14}$$

Therefore in this case the power gain in dB is positive while the voltage gain in dB is negative.

POWER LOSS OR NEGATIVE POWER GAIN

Let us compute the power gain from point 1 to point 2 for the case where the power at point 2 is less than the power at point 1. The power gain in dB is

$$G = 10 \log \frac{P_2}{P_1} . \tag{A-15}$$

To express the power ratio P_2/P_1 as a number greater than 1, we can rewrite Eq. A-15 as

$$G = 10 \log \left(\frac{P_1}{P_2}\right)^{-1} \tag{A-16}$$

From the identity of Eq. A-6 this becomes

$$G = -10 \log \frac{P_1}{P_2} . \tag{A-17}$$

Therefore power loss is indicated by a negative dB power gain.

ABSOLUTE POWER LEVEL

The decibel may also be used to represent an absolute power level by replacing the denominator of Eq. A-1 with a reference power P_0, such as 1 mW. This gives

$$\text{Number of dB (absolute)} = 10 \log \frac{P}{P_0} , \tag{A-18}$$

and represents the absolute power level above or below the reference power. In this case the user must know the reference power, which is

Table A-1 Reference Levels of Various dB Units

Unit	Type unit	Reference	Use	Remarks
dBa	Power	$10^{-11.5}$ W	Noise	Measured with F1A weighting
dBm	Power	1 mW		
dBrn	Power	10^{-12} W	Noise	Reference noise power
dBrnc	Power	10^{-12} W	Noise	Measured with "C-message" weighting
dBV	Voltage	1 V		
dBmV	Voltage	1 mV		
dBμV	Voltage	1 μV		
dBw	Power	1 W		
dBx	Power	(See Crosstalk Units Section)	Crosstalk	90 dB of crosstalk coupling loss is the reference

expressed by adding additional letters to the abbreviation dB. For example, dBm is used to signify a reference power of 1 mW. Table A-1 lists some of the more commonly used dB units and their references level and abbreviations.

NOISE MEASUREMENTS

In the telephone industry, noise on voice-frequency analog communications circuits is measured in terms of the annoyance effects of the noise on the listener. This is done by using a frequency weighting function, which accounts for the listeners' hearing as well as the frequency response of the telephone receiver. For example, if a 500-Hz interfering tone is deemed only half as annoying as a 1000-Hz interfering tone, the weighting function would assign only one half as much importance to the 500-Hz tone as to the 1000-Hz tone. The weighting function is physically obtained by placing an electric filter network in the noise meter.

Weighting Functions

In the 1920s the Western Electric 144-type telephone hand set was used for noise interference experiments. This resulted in the "144 weighting" curve shown in Fig. A-2. This curve is primarily determined by the frequency response of the 144-type telephone hand set.

In the 1930s the 302-type telephone set became prevalent and led to "F1A weighting." As shown in Fig. A-2, the F1A weighting has a wider bandwidth than 144 weighting. This is because the 302 telephone set itself had a wider response, and thus more noise could be transmitted through it to impair speech transmission.

With the advent of the 500-type telephone set in the 1950s, a new

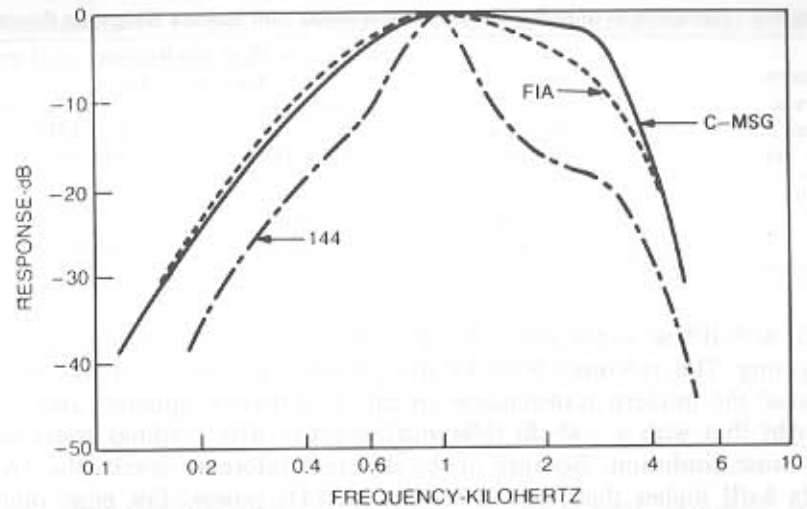

Figure A-2. *Various weighting functions used in noise measurements.*

weighting function was developed. This has a slightly wider bandwidth and is known as "C-message weighting" (see Fig. A-2). C-message weighting is now the standard used for noise measurements in the telephone industry.

Noise Units

When the early noise measuring sets were designed, it was decided to define noise in dB-type units compared to a reference noise power of 10^{-12} W, or −90 dBm. This amount of noise power (−90 dBm) is on the threshold of detection by the ear. The noise unit is called dBrn (dB reference noise). Thus 0 dBrn means a noise power of −90 dBm. Such early test sets read 0 dBrn if −90 dBm of 1000-Hz power is measured. Due to the 144 weighting, however, equal amounts of power at other frequencies give different noise readings.

When the 302-type telephones became common, the 2B noise set incorporating F1A weighting was developed. The set's designer decided to make the 2B noise set give the same numerical reading as the early noise sets for measurements of 0- to 3000-Hz bandlimited white noise. Due to the different weighting networks used, however, the 2B noise set reads 5-dB lower than the early sets for 1000-Hz power. Thus the reference power for the 2B set was raised to −85 dBm ($10^{-11.5}$ W) at 1000 Hz. The change in reference power necessitated a change in units. The new unit was called dBa (dBrn adjusted). Thus 0 dBa is equal to −85 dBm of 1000-Hz power. This unit dBa was used almost exclusively for 25 years.

When the 500-type telephone sets became widely used, the 3A noise measuring set was developed. This set incorporates "C-message weighting." It was decided to return to the original −90 dBm of 1000 Hz as the reference

Table A-2 Comparison of Noise Measurements Made with Various Weighting Functions

Western Electric Noise Test Set	Weighting Function	Test Set Reading for 0 dBm Input: 1000 Hz	Test Set Reading for 0 dBm Input: 0–3 kHz White Noise
Early	144	90 dBrn	82 dBrn
2B	F1A	85 dBa	82 dBa
3A	C	90 dBrnc	88 dBrnc

level, with dBrnc as the unit. The unit dBrnc means dBrn using C-message weighting. This reference level for the 3A noise measuring set was selected because the modern transmission circuits had become quieter, and it was thought that with a −85-db reference, negative dBa readings could occur and cause confusion. Because of the different reference levels, the 3A set reads 5-dB higher than the 2B set for 1000-Hz power. For most random noises, however, the 3A set reads about 6 dB higher than the 2B set due to the difference in weighting.

Table A-2 shows a comparison of readings from each of these three test sets.

CROSSTALK UNITS

The unit of crosstalk is the dBx. This is an unusual unit since the reference is not an absolute power level. The reference is 90 dB loss from the interfering circuit to the circuit being interfered with. The unit is a measure of how much the crosstalk coupling loss is above 90 dB of coupling loss. Therefore

$$\text{dBx} = 90 - (\text{crosstalk coupling loss in dB}) \tag{A-19}$$

For example, suppose that circuit B picks up a signal from circuit A, but at a 62 dB lower power level. The crosstalk from A to B, then, is 28 dBx.

SUMMING POWERS EXPRESSED IN DECIBELS

It is often necessary to determine the sum of two powers when the individual powers are expressed in dB with respect to some reference power level (e.g., dBm). The individual powers could always be converted to absolute power, added, and converted back to dB, but this is time-consuming. The following procedure can be used when combining such terms.

Y_1 and Y_2 are two power levels expressed in dB above or below a reference power level P_0. P_1 and P_2 represent the absolute power levels

corresponding to Y_1 and Y_2, respectively. Let us also assume that $P_2 \geq P_1$. From Eqs. A-18 and A-3 we can write

$$\frac{P_1}{P_0} = (10)^{Y_1/10} \tag{A-20}$$

and

$$\frac{P_2}{P_0} = (10)^{Y_2/10}; \tag{A-21}$$

therefore

$$\frac{P_1}{P_2} = (10)^{(Y_1 - Y_2)/10}. \tag{A-22}$$

Let us define the difference (D) between the two powers, expressed in dB as

$$D = Y_2 - Y_1. \tag{A-23}$$

Therefore

$$P_1 = P_2(10)^{-D/10}. \tag{A-24}$$

Adding P_2 to both sides gives

$$P_1 + P_2 = P_2(1 + 10^{-D/10}). \tag{A-25}$$

Expressing the sum of the powers P_1 and P_2 in terms of dB referenced to P_0 gives

$$Y_T = 10 \log \left(\frac{P_1 + P_2}{P_0} \right). \tag{A-26}$$

This can be rewritten as

$$Y_T = 10 \log (P_1 + P_2) - 10 \log P_0. \tag{A-27}$$

Substituting from Eq. A-25 for $P_1 + P_2$ gives

$$Y_T = 10 \log [P_2(1 + 10^{-D/10})] - 10 \log P_0 \tag{A-28}$$

$$Y_T = 10 \log \left(\frac{P_2}{P_0} \right) + 10 \log (1 + 10^{-D/10}). \tag{A-29}$$

The first term represents Y_2, the larger of the two individual powers expressed in terms of dB. The second term represents how much Y_2 must be increased when the two are combined.

The sum of two powers expressed in dB is therefore equal to the larger power increased by

$$\boxed{10 \log (1 + 10^{-D/10})}$$

where D equals the difference in dB between the two original powers. The maximum value of this expression is 3 dB and occurs when $D = 0$. Values of this expression are tabulated in Table A-3.

Table A-3 Sum of Two Powers Expressed in dB

Amount D by Which Two Powers Differ (dB)	Amount by Which Larger Quantity Is Increased to Obtain Sum (dB)
0	3.00
0.5	2.77
1	2.54
1.5	2.32
2	2.12
3	1.76
4	1.46
5	1.19
6	0.97
7	0.79
8	0.64
9	0.51
10	0.41
11	0.33
12	0.27
15	0.14
20	0.04

APPENDIX B
SUMMARY OF NOISE REDUCTION TECHNIQUES

The check list that follows is intended to summarize, in short form, the more commonly used noise reduction techniques. Those items with an asterisk are essentially free of added cost and should be used whenever applicable. The remaining techniques should be used whenever additional noise reduction is required.

NOISE REDUCTION CHECK LIST

A. Suppressing Noise At Source

- ☐ Enclose noise sources in a shielded enclosure.
- ☐ Filter all leads leaving a noisy environment.
- ☐ Limit pulse rise times.
- ☐ Relay coils should be provided with some form of surge damping.
- ☐ Twist noisy leads together.*
- ☐ Shield and twist noisy leads.
- ☐ Ground both ends of shields used to suppress radiated interference (shield does not need to be insulated).*

B. Eliminating Noise Coupling

- ☐ Twist low-level signal leads.*
- ☐ Place low-level leads near chassis (especially if the circuit impedance is high).
- ☐ Twist and shield signal leads (coaxial cable may be used at high frequencies).
- ☐ Shielded cables used to protect low-frequency, low-level signal leads should be grounded at *one end only* (coaxial cable may be used at high frequencies with shield grounded at both ends).*
- ☐ Insulate shield on signal leads.

- ☐ When low-level signal leads and noisy leads are in the same connector, separate them and place the ground leads between them.*
- ☐ Carry shield on signal leads through connectors on a separate pin.
- ☐ Avoid common ground leads between high- and low-level equipment.*
- ☐ Keep hardware grounds separate from circuit grounds.*
- ☐ Keep ground leads as short as possible.*
- ☐ Use conductive coatings in place of nonconductive coatings for protection of metallic surfaces.
- ☐ Separate noisy and quiet leads.*
- ☐ Ground low-frequency, low-level circuits at one point only (high frequencies and digital logic are exceptions).*
- ☐ Avoid questionable or accidental grounds.
- ☐ For very sensitive applications, operate source and load balanced to ground.
- ☐ Place sensitive equipment in shielded enclosures.
- ☐ Filter or decouple any leads entering enclosures containing sensitive equipment.
- ☐ Keep the length of sensitive leads as short as possible.*
- ☐ Keep the length of leads extending beyond cable shields as short as possible.*
- ☐ Use low-impedance power distribution lines.
- ☐ Avoid ground loops in low-frequency, low-level circuits.*
- ☐ Consider using the following devices for breaking ground loops:
  - Isolation transformers
  - Common-mode chokes
  - Optical couplers
  - Differential amplifiers
  - Guarded amplifiers
  - Balanced circuits
  - Hybrid ground

C. Reducing Noise at Receiver

- ☐ Use only necessary bandwidth.
- ☐ Use frequency-selective filters when applicable.
- ☐ Provide proper power-supply decoupling.
- ☐ Bypass electrolytic capacitors with small high-frequency capacitors.
- ☐ Separate signal, noisy, and hardware grounds.*
- ☐ Use shielded enclosures.
- ☐ With tubular capacitors, connect outside foil end to ground.*

D. Guidelines for Controlling Emissions in Digital Systems

- ☐ Minimize ground inductance by using a ground plane or ground grid.
- ☐ Locate decoupling capacitors next to each IC in the system.
- ☐ Use the smallest value decoupling capacitor that will do the job.
- ☐ Use a bulk decoupling capacitor to recharge the individual IC decoupling capacitors.
- ☐ Clock signal loop areas should be kept as close to zero as possible.
- ☐ All cables should be treated to minimize their common-mode current.
- ☐ All unused inputs on logic gates should be connected to either power or ground.
- ☐ I/O drivers should be located near where the cables leave the system.
- ☐ Use the lowest-frequency clock, and slowest rise time that will do the job.
- ☐ Keep clock circuits and leads away from the I/O cables.

APPENDIX C
MULTIPLE REFLECTIONS OF MAGNETIC FIELDS IN THIN SHIELDS

Consider the case of a magnetic field with a wave impedance Z_1 incident on a thin shield of characteristic impedance Z_2, as shown in Chapter 6, Fig. 6-13. Since the shield is thin and the velocity of propagation is large, the phase shift through the shield can be neglected. Under these conditions the total transmitted wave can be written as

$$H_{t(\text{total})} = H_{t2} + H_{t4} + H_{t6} + \cdots . \tag{C-1}$$

From Eqs. 6-10 and 6-15 we can write

$$H_{t2} = \frac{2Z_1H_0}{Z_1 + Z_2}(e^{-t/\delta})K , \tag{C-2}$$

where K equals the transmission coefficient at the second interface from medium 2 to medium 1 (Eq. 6-17).

We can now write for H_{t4},

$$H_{t4} = \frac{2Z_1H_0}{Z_1 + Z_2}(e^{-t/\delta})(1-K)(e^{-t/\delta})(1-K)(e^{-t/\delta})K , \tag{C-3}$$

which reduces to

$$H_{t4} = \frac{2Z_1H_0}{Z_1 + Z_2}(e^{-3t/\delta})(K - 2K^2 + K^3) . \tag{C-4}$$

Consider the case of a metallic shield where $Z_2 \ll Z_1$. Then $K \ll 1$, $K^2 \ll K$, $K^3 \ll K$, etc. The total transmitted wave can then be written as

$$H_{t(\text{total})} = 2H_0K(e^{-t/\delta} + e^{-3t/\delta} + e^{-5t/\delta} + \cdots) . \tag{C-5}$$

The infinite series in brackets in Eq. C-5 has the limit*

Standard Mathematical Tables, 21st edition, p. 343 (Chemical Rubber Co., 1973).

$$e^{-t/\delta} + e^{-3t/\delta} + e^{-5t/\delta} + \cdots = \frac{\operatorname{cosech}(t/\delta)}{2} = \frac{1}{2\sinh(t/\delta)} . \tag{C-6}$$

Substituting Eq. 6-17 for K and Eq. C-6 for the infinite series in Eq. C-5, gives

$$H_{t(\text{total})} = \frac{4H_0Z_2}{Z_1}\left[\frac{1}{2\sinh(t/\delta)}\right] , \tag{C-7}$$

or

$$\frac{H_0}{H_{t(\text{total})}} = \left(\frac{Z_1}{4Z_2}\right)2\sinh\left(\frac{t}{\delta}\right) . \tag{C-8}$$

Shielding effectiveness is 20 times the log of Eq. C-8, or

$$S = 20\log\frac{Z_1}{4Z_2} + 20\log\left[2\sinh\left(\frac{t}{\delta}\right)\right] . \tag{C-9}$$

Replacing Z_1 with the impedance of the wave at the shild Z_w, and replacing Z_2 with the shield impedance Z_s, gives

$$S = 20\log\frac{Z_w}{4Z_s} + 20\log\left[2\sinh\left(\frac{t}{\delta}\right)\right] . \tag{C-10}$$

The first term of Eq. C-10 is the reflection loss R, as defined by Eq. 6-22. To calculate the correction factor B, we must put Eq. C-10 into the form of Eq. 6-8. The second term of Eq. C-10 must therefore be equal to $A + B$. Thus we can write

$$B = 20\log\left[2\sinh\left(\frac{t}{\delta}\right)\right] - A . \tag{C-11}$$

Substituting for A, from Eq. 6-12a, gives

$$B = 20\log\left(2\sinh\frac{t}{\delta}\right) - 20\log e^{t/\delta} . \tag{C-12}$$

Combining terms

$$B = 20\log\left[\frac{2\sinh(t/\delta)}{e^{t/\delta}}\right] , \tag{C-13}$$

expressing the $\sinh(t/\delta)$ as an exponential, gives the correction factor B as

$$B = 20\log[1 - e^{-2t/\delta}] . \tag{C-14}$$

Figure 6-14 is a plot of Eq. C-14 as a function of t/δ. Note that the correction factor B is always a negative number, indicating that less shielding is obtained from a thin shield due to the multiple reflections.

Table C-1 lists values of B for very small values of t/δ which are not shown in Fig. 6-14.

Table C-1 Reflection Loss Correction Factor (B) for Very Thin Shields

t/δ	B(dB)
0.001	−54
0.002	−48
0.004	−42
0.006	−38
0.008	−36
0.01	−34
0.05	−20

APPENDIX D PROBLEMS

PROBLEM 1-1

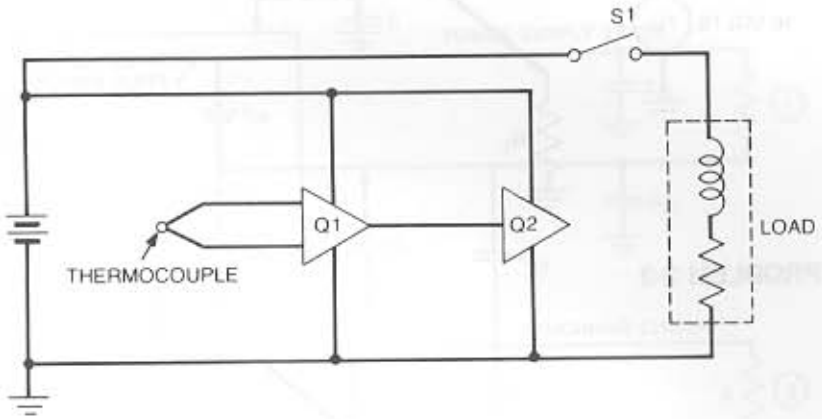

In the circuit shown, amplifiers $Q1$ and $Q2$, are used to amplify the low-level signal from a thermocouple. A high-power load, periodically operated by switch $S1$, is also powered from the same battery. Assuming the circuit is wired as shown in the figure, identify potential noise sources, coupling channels, and receptors.

PROBLEM 2-1

The stray capacitance between conductors 1 and 2 is 50 pF. Each conductor has a capacitance to ground of 150 pF. Conductor 1 has a 10-V ac signal at a frequency of 100 kHz on it. See figure at top of p. 366. What is the noise voltage picked up by conductor 2 if it is terminated (R_T):

a. In an infinite resistance?
b. In a 1000-Ω resistance?
c. In a 50-Ω resistance?

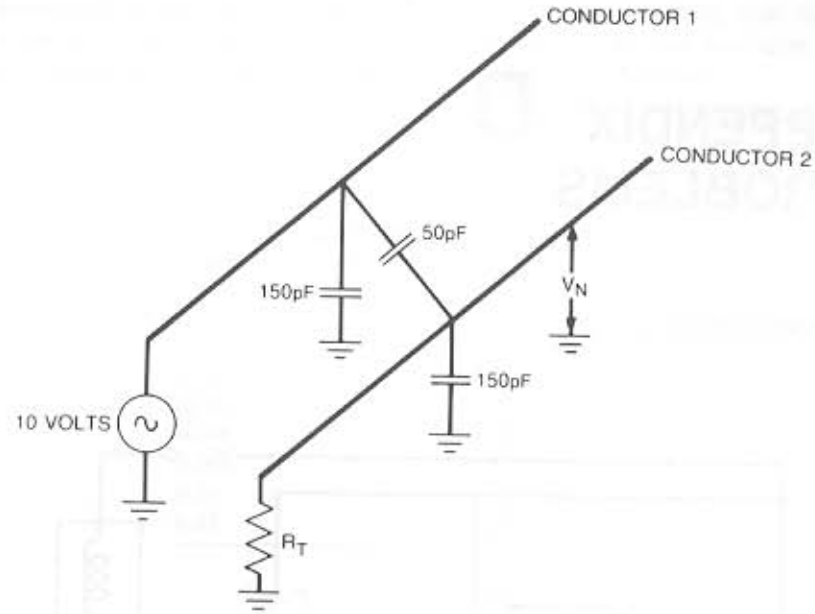

PROBLEM 2-2

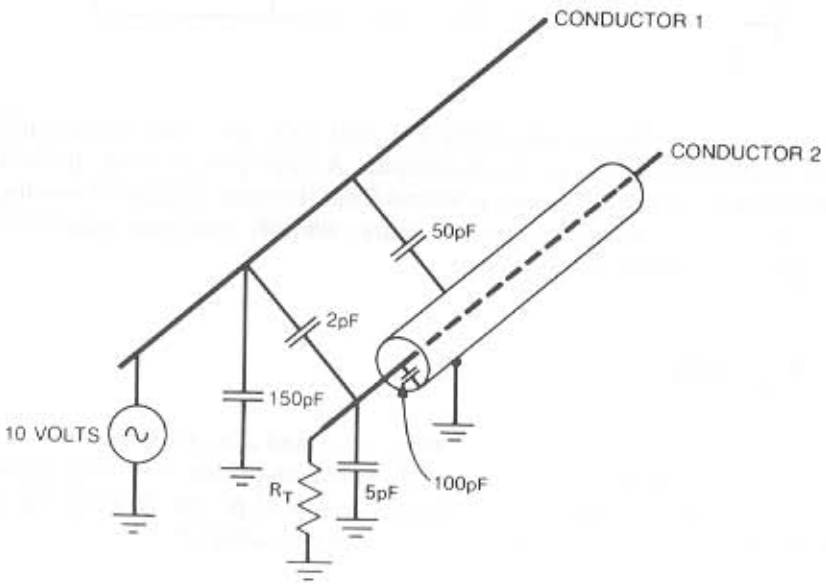

In the illustration, a grounded shield is placed around conductor 2. The capacitance from conductor 2 to the shield is 100 pF. The capacitance

between conductors 2 and 1 is 2 pF, and the capacitance between conductor 2 and ground is 5 pF. Conductor 1 has a 10-V ac signal at a frequency of 100 kHz on it. For this configuration, what is the noise voltage picked up by conductor 2 if it is terminated (R_T):

a. In an infinite resistance?
b. In a 1000-Ω resistance?
c. In a 50-Ω resistance?

PROBLEM 2-3

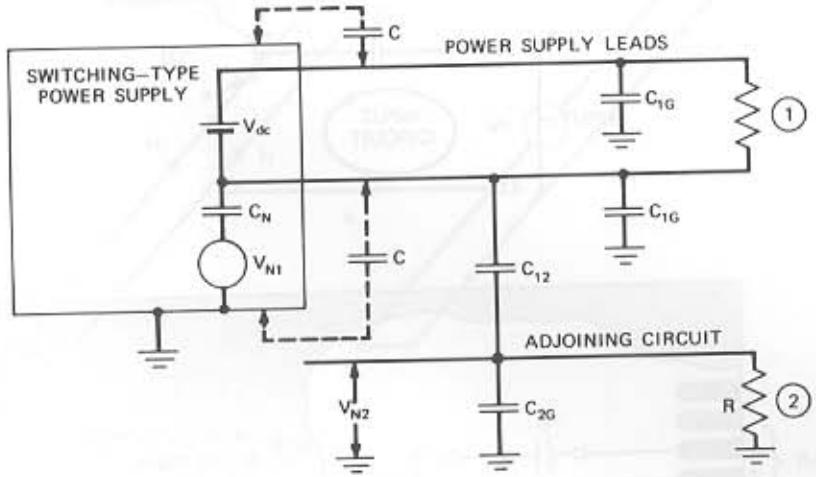

Due to the switching action of power transistors, a noise voltage is usually introduced in switching-type power supplies between the power-supply output leads and the case. This is V_{N1} in the illustration. This noise voltage can capacitively couple into adjoining circuit 2 as illustrated. C_N is the equivalent coupling capacitance between the case and the output power leads.

a. For this circuit configuration, determine and sketch the ratio V_{N2}/V_{N1} as a function of frequency. (Neglect the capacitors C, shown dotted.)

Next, capacitors (C) are added between the output power leads and the case, as indicated.

b. How does this affect the noise coupling?
c. How would shielding of the power-supply leads improve the noise performance?

PROBLEM 2-4

Two conductors, each 10-cm long and spaced 1-cm apart, form a circuit. This circuit is located where there is a 10-gauss magnetic field at 60 Hz.

What is the maximum noise voltage coupled into the circuit due to the magnetic field?

PROBLEM 2-5

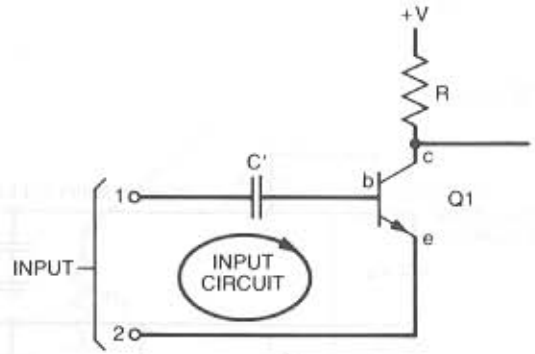

A

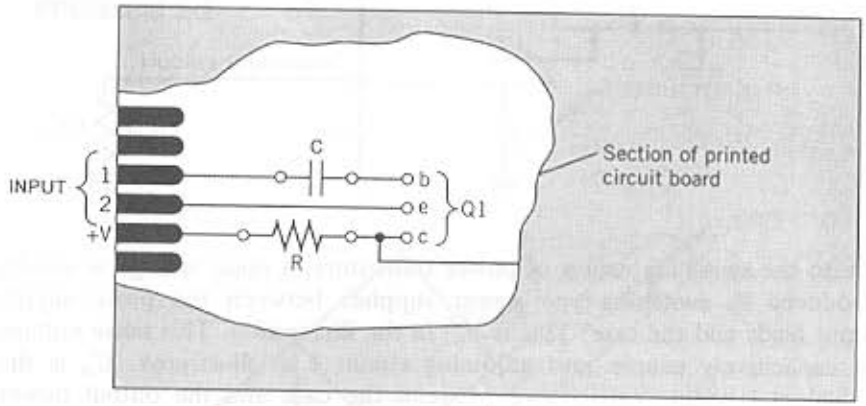

B

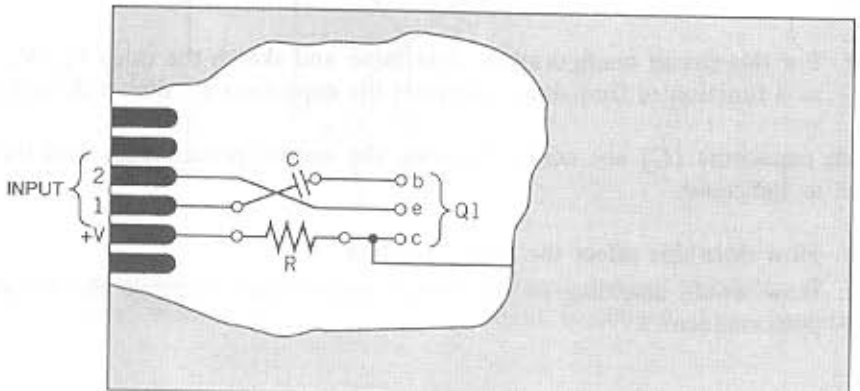

Figure A in the illustration is a partial schematic for a low-level transistor amplifier. A printed circuit layout for the circuit is shown in Fig. B. The circuit is located within a strong magnetic field.

What is the advantage of the alternate layout shown in Fig. C over that of Fig. B?

PROBLEM 2-6

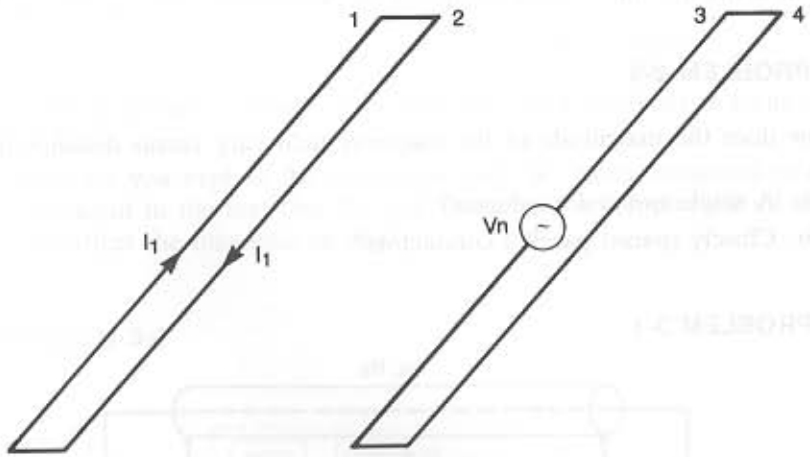

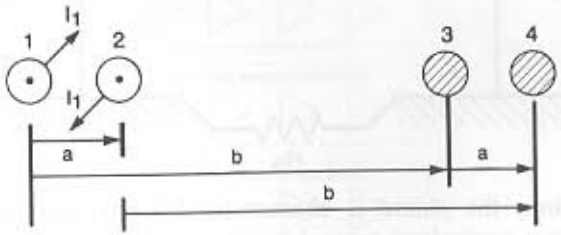

Calculate the mutual inductance per unit length between the two coplaner parallel loops shown in the illustration.

PROBLEM 2-7

Using the results of Problem 2-6:

a. Calculate the mutual inductance per unit length between adjacent pairs (first and second pair) of a ribbon cable having a conductor

spacing of 0.05 in. Also calculate the mutual inductance between the first and third pair, and between the first and fourth pair.

b. If the signal in one pair is a 10 MHz, 5 V sine wave and the cable is terminated with 500 Ω, what is the voltage induced into the adjacent pair?

PROBLEM 2-8

What is the maximum value of the mutual inductance between two circuits?

PROBLEM 2-9

How does the magnitude of the magnetic field vary versus distance from:

a. A single isolated conductor?
b. Closely spaced parallel conductors?

PROBLEM 3-1

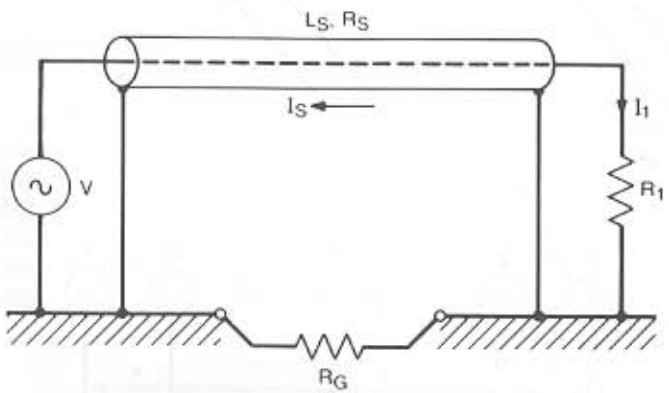

In the illustration, the shield is characterized by its inductance L_S and resistance R_S. An equivalent ground resistance R_G is also associated with the arrangement.

a. Make an asymptotic plot of $|I_S/I_1|$ versus frequency.
b. Above what frequency does 98% of the current I_1 return through the shield?

PROBLEM 3-2

If a bead of magnetic material is placed on a shielded cable, what effect does this have on the shield cutoff frequency?

PROBLEM 3-3

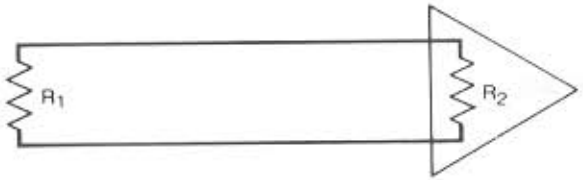

A magnetic field induces a noise voltage into the above circuit.

a. What is the noise voltage at the amplifier input terminals as a function of R_1?
b. How do you explain the answer to part "a" when compared to the statement in the text that the impedance of the receptor circuit does not affect the magnetic pickup?

PROBLEM 3-4

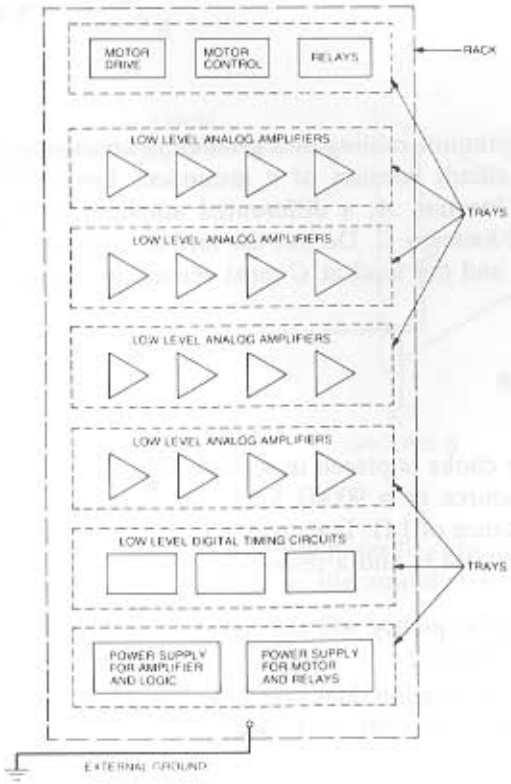

For the physical arrangement of a tape recorder shown in the preceding illustration, design a grounding system.

PROBLEM 3-5

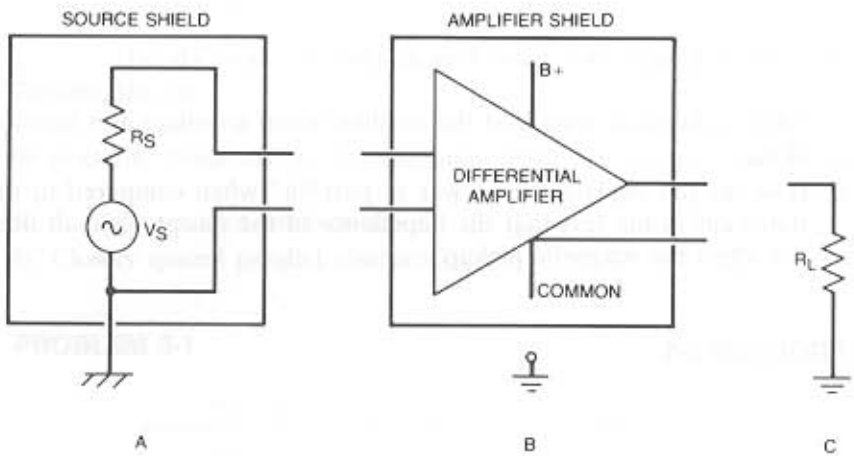

Determine the optimum cabling and grounding arrangement for the circuit illustrated. The circuit consists of a grounded, low-level, low-frequency, signal source at location A; a differential amplifier at location B; and a grounded load at location C. Do not use any transformers or guard shields. The source at A and the load at C must remain grounded.

PROBLEM 3-6

A common-mode choke is placed in series with a transmission line connecting a low-level source to a 900-Ω load. The transmission-line conductors each have a resistance of 1 Ω. Each winding of the common-mode choke has an inductance of 0.044 H and a resistance of 4 Ω.

a. Above what frequency will the choke have a negligible effect on the signal transmission?
b. How much attenuation does the choke provide to a ground differential noise voltage at 60, 180, and 300 Hz?

PROBLEM 3-7

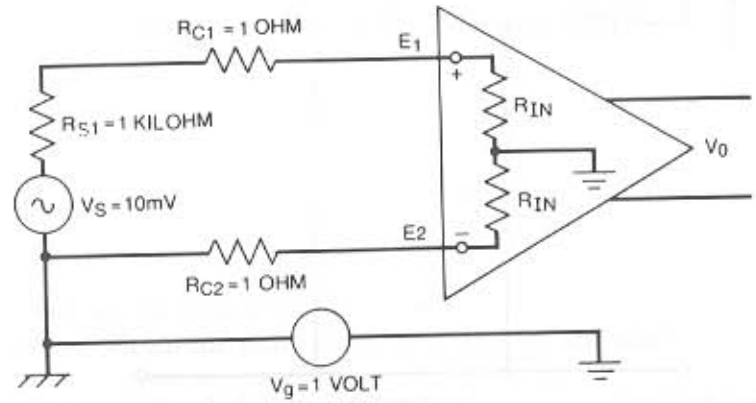

For the circuit illustrated, what restriction must there be on the value of R_{IN} in order to keep the ground noise coupled into the differential amplifier to less than 0.1% of the signal voltage (V_s)?

PROBLEM 3-8

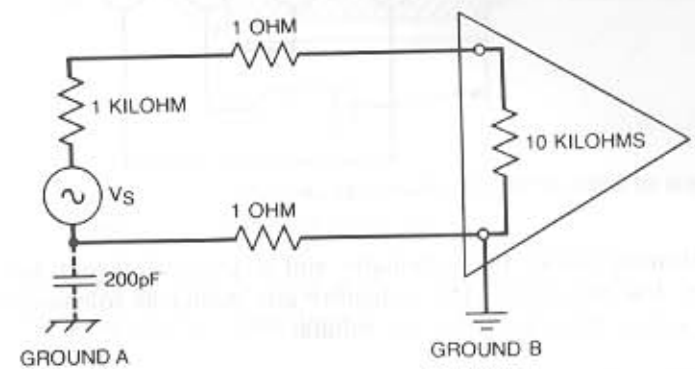

The circuit in the illustration has 200 pF of parasitic capacitance from source to ground. What is the noise voltage at the amplifier if the noise voltage between the two grounds is

a. 100 mV at 60 Hz?
b. 100 mV at 6000 Hz?

PROBLEM 3-9

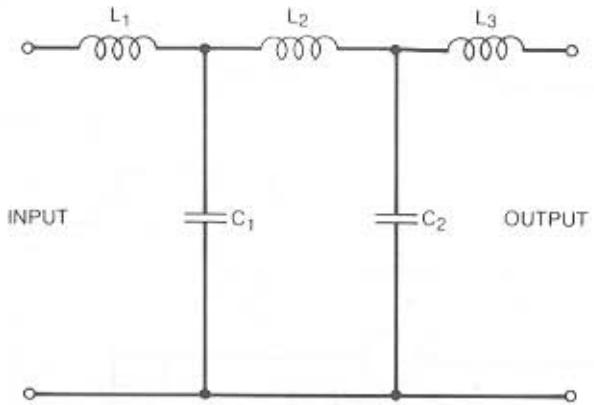

SCHEMATIC

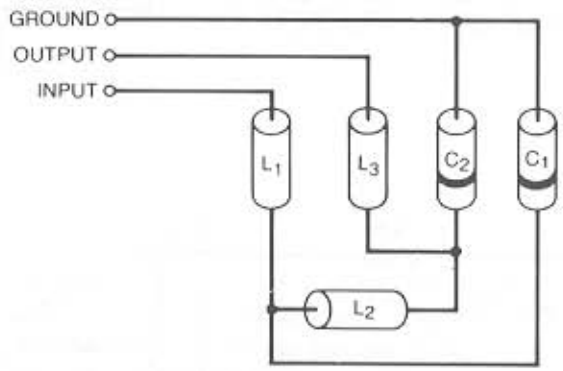

PHYSICAL LAYOUT

The illustration shows the schematic and a physical layout for a high-frequency, low-pass filter. The inductors are wound as solenoids on open magnetic cores. The capacitors are tubular.

a. List the disadvantages of the layout shown.
b. Propose a new layout that overcomes these disadvantages.

PROBLEM 3-10

A digital voltmeter with guard shield is used to make a voltage measurement in the following bridge circuit.

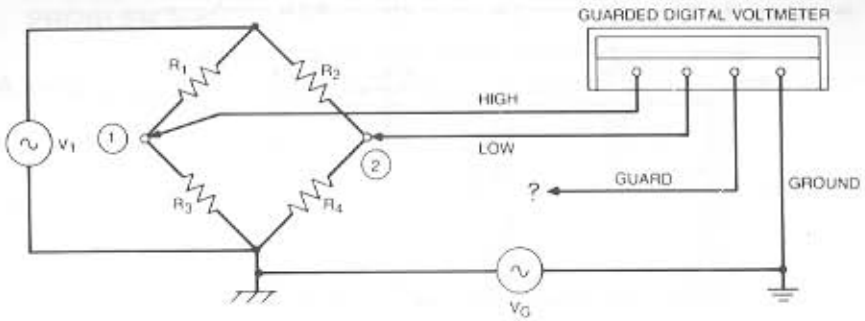

a. What are the common-mode sources?
b. Where should the guard shield be connected and why?

Note: The correct solution to this problem requires careful thought and analysis.
Hint: Take the Thevenin's equivalent circuit looking into terminals 1 and 2.

PROBLEM 4-1

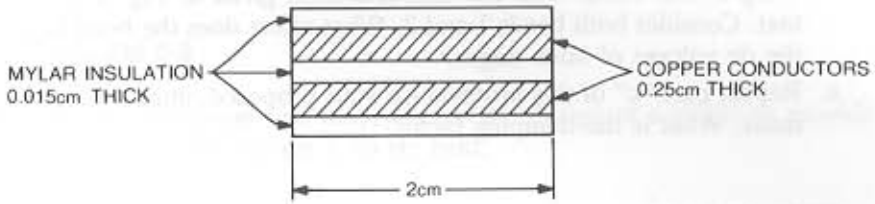

The power bus arrangement shown in the illustration is used to transmit 5 V dc to a 10-A load. The bus bar is 5 m long.

a. What is the dc voltage drop in the distribution system?
b. What is the characteristic impedance of the line?

PROBLEM 5-1

Power is supplied to a two-stage high-frequency electronic circuit by a 20-gauge wire of length $l(l \geqslant 2\text{ in.})$ and via two feed-through capacitors, as illustrated. Stage 2 of the circuit operates at a frequency of 25 MHz, and each stage is in a shielded enclosure to prevent coupling between the stages. In this arrangement a resonant circuit is formed by the power line induct-

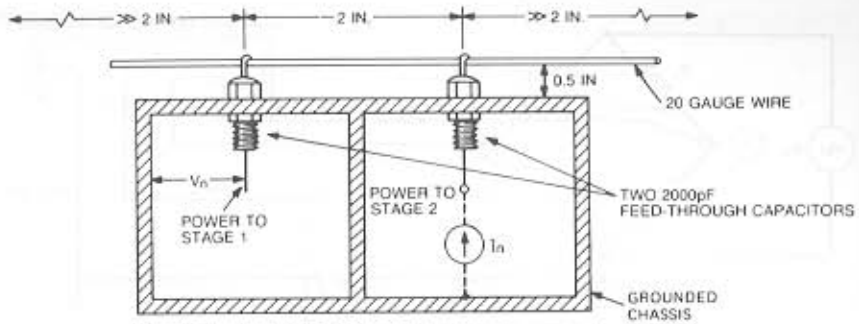

ance and the two feed-through capacitors. This resonant circuit could possibly provide a coupling path between the two circuits.

a. What is the resonant frequency and damping factor of this L–C circuit? (Use wire data given in Table 5-4 on p. 151.)
b. If the noise source can be represented by an equivalent current source $I_n(j\omega)$ in stage 2, as shown in the illustration, derive an expression for the noise voltage $V_n(j\omega)$ coupled into the first stage.
c. For $I_n = 1$ mA and $f = 25$ MHz, determine $|V_n|$.
d. Propose a way to reduce noise coupling between stages 1 and 2 by using ferrite beads with the characteristics given in Fig. 5-16 of the text. Consider both beads 1 and 2. What effect does the bead have on the dc voltage of both stages?
e. Repeat part "c" of this problem for your proposed, improved arrangement. What is the damping factor?

PROBLEM 5-2

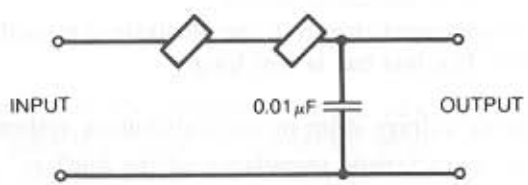

What is the attenuation at 5 MHz of a filter consisting of two ferrite beads (bead 2 in Fig. 5-16) and a 0.01-μF capacitor connected as shown.

PROBLEM 5-3

Make a table of the ratio of the ac resistance to the dc resistance of a 22-gauge copper conductor at the following frequencies: 0.2, 0.5, 1, 2, 5, 10, and 50 MHz.

PROBLEM 5-4

A copper conductor has a rectangular cross section of 0.5×2 cm.

a. Calculate the dc resistance per 100 ft of conductor length.
b. Calculate the 1-MHz resistance per 100 ft of conductor length.

PROBLEM 6-1

What is the magnitude of the characteristic impedance of silver, brass, and stainless steel at 10 kHz?

PROBLEM 6-2

Calculate the skin depth and absorption loss for a brass shield 0.062-in. thick at the following frequencies:

a. 0.1 kHz.
b. 1.0 kHz.
c. 10 kHz.
d. 100 kHz.

PROBLEM 6-3

Considering absorption loss only, discuss the design of a shield to provide 30 dB of attenuation against a 60-Hz field.

PROBLEM 6-4

a. What is the reflection loss of a 0.001-in. thick copper shield to a 1000-Hz electric field?
b. If the thickness is increased to 0.01 in., what is the reflection loss?

PROBLEM 6-5

Calculate the shielding effectiveness of a 0.015-in. thick copper shield located 2.5 cm from the source of a 10-kHz magnetic field.

PROBLEM 6-6

What would be the shielding effectiveness of the shield of the previous problem if it were located in the far field?

PROBLEM 6-7

What is the shielding effectiveness of a 0.032-in. thick aluminum shield located 1 ft away from the source of a 10-kHz electric field?

PROBLEM 6-8

A shield is located 6 in. from the source of an electric or magnetic field. Above what frequency should the far-field equations be used?

PROBLEM 6-9

Calculate the absorption loss of three different copper shields, 0.020-in., 0.040-in., and 0.060-in. thick, to a 1-kHz magnetic field.

PROBLEM 6-10

List as many reasons as you can why a "paint can" would make a good medium- to high-frequency shield.

PROBLEM 6-11

A shield containing 40 identical slots is required to have 20 dB of shielding effectiveness at 100 MHz. What is the maximum linear dimension of one slot?

PROBLEM 7-1

A 1-H, 400-Ω relay coil is to be operated from a 30-V dc supply. The switch controlling the relay has plantinum contacts. Design a contact-protection network for this circuit.

PROBLEM 7-2

For the zener diode protection circuit of Fig. 7-15E, plot the following three waveshapes when the contact closes and then opens. Assume no contact breakdown.

a. The voltage across the load (V_L).
b. The current through the load (I_L).
c. The voltage across the contact (V_c).

PROBLEM 8-1

Calculate the noise voltage produced by a 5000-Ω resistor in a system with a 10-kHz bandwidth, at a temperature of:

a. 27°C (300°K).
b. 100°C (373°K).

PROBLEM 8-2

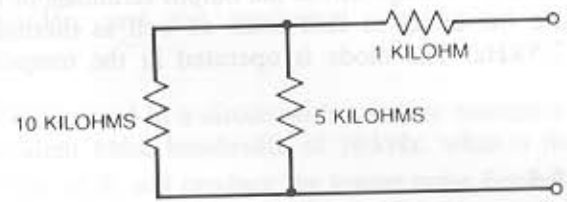

Calculate the thermal noise voltage per square root of bandwidth for the illustrated circuit at room temperature.

PROBLEM 8-3

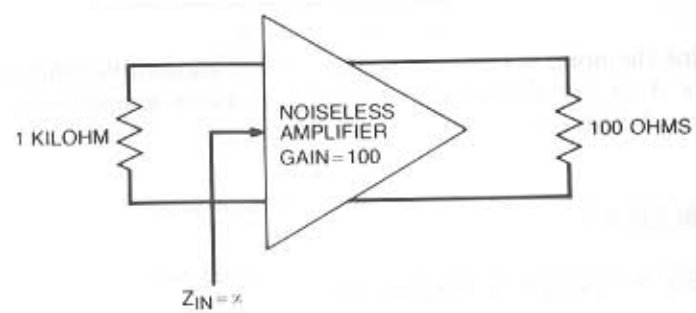

Determine the noise voltage at the amplifier output for the circuit illustrated. Assume the amplifier has a frequency response equivalent to:

a. An ideal low-pass filter with a cutoff frequency of 2 kHz.
b. An ideal bandpass filter with cutoff frequencies of 99 and 101 kHz.

PROBLEM 8-4

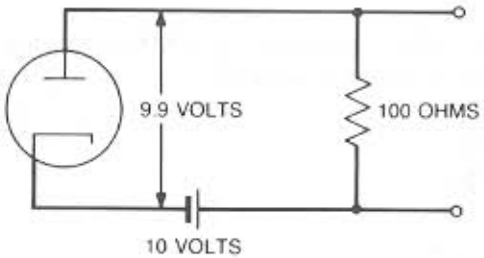

What is the total noise voltage across the output terminals of the illustrated circuit? Calculate the effect of shot noise as well as thermal noise for a bandwidth of 2.5 kHz. The diode is operated in the temperature-limited region.

PROBLEM 8-5

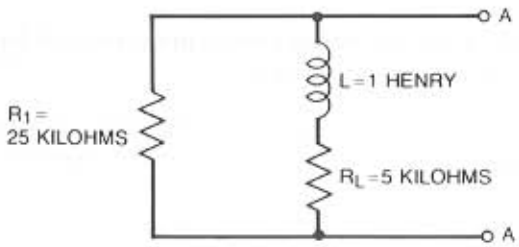

Determine the noise voltage per square root of bandwidth generated across terminals A–A for the circuit illustrated at room temperature and at a frequency of 1590 Hz.

PROBLEM 9-1

Derive Eq. 9-3 (in text) from Eq. 9-1.

PROBLEM 9-2

Which device produces the least equivalent input device noise ($V_{nd}/\sqrt{B}$)?

a. A bipolar transistor with a noise figure of 10 dB measured at $R_s = 10^4\ \Omega$.
b. An FET with a noise figure of 6 dB measured at $R_s = 10^5\ \Omega$.

PROBLEM 9-3

A transistor has a noise figure of 3 dB measured with a source resistance of 1.0 MΩ. What is the output power–signal-to-noise ratio if this transistor is used in a circuit with an input signal of 0.1 mV and a source resistance of 1.0 MΩ? Assume the system has an equivalent noise bandwidth of 10 kHz.

PROBLEM 9-4

The noise of an FET is specified as follows. Equivalent input noise voltage is $0.06 \times 10^{-6}\ \mathrm{V}/\sqrt{\mathrm{Hz}}$, and the equivalent input noise current is $0.2 \times 10^{-12}\ \mathrm{A}/\sqrt{\mathrm{Hz}}$.

a. If the FET is used in a circuit with a source resistance of 100 kΩ and an equivalent noise bandwidth of 10 kHz, what is the noise figure?
b. What value of R_s will produce the lowest noise figure, and what is the noise figure with this value of R_s?

PROBLEM 9-5

A low-noise preamplifier is to be driven from a 10-Ω source. Data supplied by the manufacturer specify V_n and I_n at the operating frequency as

$$\frac{V_n}{\sqrt{B}} = 10^{-8}\ \mathrm{V}/\sqrt{\mathrm{Hz}},$$

$$\frac{I_n}{\sqrt{B}} = 10^{-13}\ \mathrm{A}/\sqrt{\mathrm{Hz}}.$$

a. Determine the input-transformer turns ratio to provide optimum noise performance.
b. Calculate the noise figure for the circuit using the transformer of part "a."
c. What would be the noise figure with the preamplifier directly coupled to the 10-Ω source?
d. What would be the signal-to-noise improvement factor (SNI) for this circuit?

PROBLEM 9-6

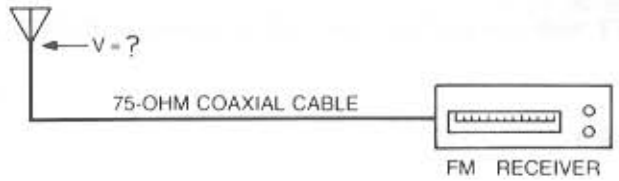

The illustration shows an FM antenna connected to an FM receiver by a section of 75-Ω matched coaxial cable. The required signal-to-noise ratio at the input terminals to the set for good quality reception is 18 dB, and the noise figure of the receiver is 8 dB.

a. If the cable connecting the receiver to the antenna has 6 dB of insertion loss, what signal voltage is required at the point where the antenna connects to the cable, to provide good quality reception? The noise bandwidth of the receiver is 50 kHz.
b. Why is the voltage considerably less than that required in the case of a TV set as worked out on p. 259 of the text?

PROBLEM 9-7

Find the noise figure for a system with a noise temperature (T_e) equal to 290°K.

PROBLEM 9-8

A transistor is operated at a frequency $f \ll f_\alpha$. The transistor parameters are $r_b' = 50\,\Omega$ and $\beta_0 = 100$. Calculate the minimum noise factor and the value of source resistance for which it occurs when collector current is

a. 10 μA.
b. 1.0 mA.

Note: $r_e \approx 26/I_C(\text{mA})$

PROBLEM 9-9

A junction FET has the following parameters measured at 100 MHz: $g_{fs} = 1500 \times 10^{-6}$ mhos and $g_{11} = 800 \times 10^{-6}$ mhos. If the transistor is to be used in a circuit with a source resistance of 1000 Ω, what is the noise figure?

PROBLEM 9-10

Derive Eq. 9-37. Start with the equivalent circuit of Fig. 9-4 and Eq. 9-1.

PROBLEM 9-11

Derive Eq. 9-40. Start with the equivalent circuit of Fig. 9-4.

PROBLEM 10-1

An IC requires 33 mA of current for 3 ns when it switches. The total trace length on the printed wiring board between the IC power and ground pins and the decoupling capacitor is 1 in.

a. To limit the voltage transient of the IC to 0.01 V, what is the minimum value decoupling capacitor that should be used?
b. For the value of capacitor determined in part "a," estimate the self-resonant frequency of the capacitor, printed wiring board trace combination?

PROBLEM 10-2

At what frequency will a 470 pf decoupling capacitor be most effective, if it is used in series with 35 nH of inductance?

PROBLEM 11-1

A 3-ft long ribbon cable is carrying a 5-MHz, 5-ns rise time clock signal. The signal flows down one conductor and returns on the adjacent conductor (conductor spacing is 0.05 in.). Assume the peak current is 25 mA.

a. Determine the radiated field strength in dB μV/m at the fundamental frequency, at a distance of 3 m from the cable.
b. Using the result of part "a," plot the envelope of the radiated emission from 5 to 500 MHz.
c. Calculate the radiated emission due to the 17th harmonic.
d. Compare the results of part "b" to the FCC Class B limit for computing devices.

PROBLEM 11-2

A 12-in. long backplane has a 9-MHz clock signal running its entire length. The ground-return conductor is located 1 in. from the clock signal. The clock has a 4-ns rise time and a peak current of 25 mA. Calculate the radiated emission at a distance of 3 m from the backplane and compare it to the FCC limit for a Class A computing device.

PROBLEM 11-3

What is the maximum length cable that can be connected to a system with 25 mV of ground noise at 94 MHz, without exceeding the FCC radiated emission limit for a Class A computing device? Assume the cable has a common-mode impedance of 200 Ω.

PROBLEM 12-1

Calculate the free-space capacitance for the following:

a. A $\frac{1}{2}$ inch diameter ball bearing.
b. A 5-ft diameter Mylar balloon.

PROBLEM 12-2

If polyester and aluminum are rubbed together and then separated, what will be the polarity of the charge on each material?

APPENDIX E
ANSWERS TO PROBLEMS

Note: For some of these problems, a single unique solution may not exist. Therefore solutions other than the ones listed here may also be acceptable.

PROBLEM 1-1

Source	Coupling Channel	Receptor
Arc in switch	Radiation	*TC*[a] *Q*1 *Q*2
	Radiation + conduction	*Q*1 *Q*2
Transient load current	Radiation	*TC*[a] *Q*1 *Q*2
	Common battery resistance + conduction	*Q*1 *Q*2
	Common impedance of ground	*Q*1 *Q*2
	Radiation + conduction	*Q*1 *Q*2
Steady-state load current	Common impedance of ground	*Q*1 *Q*2
Magnetic field of inductor	Radiation	*TC*[a] *Q*1 *Q*2
	Radiation + conduction	*Q*1 *Q*2

[a]Thermocouple.

PROBLEM 2-1

a. 2.5 V.
b. 314 mV.
c. 15.7 mV.

PROBLEM 2-2

a. 187 mV.
b. 12.6 mV.
c. 628 μV.

PROBLEM 2-3

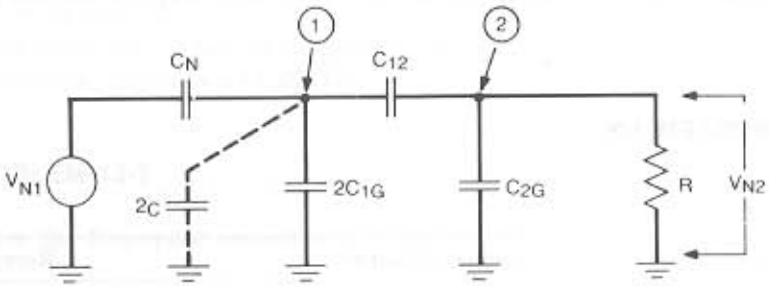

An equivalent circuit of the noise coupling is shown here. A reasonable assumption to simplify the problem is that $2C_{1G} \gg C_{12}$.

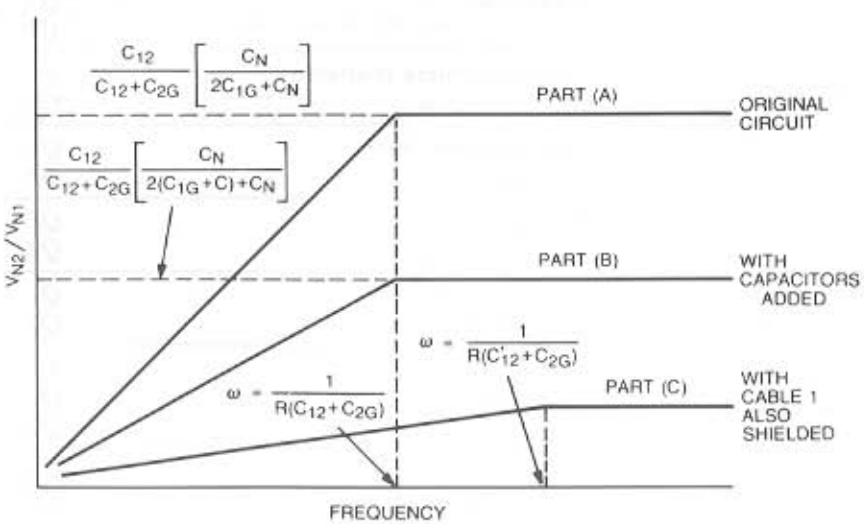

a. The asymtotic plot of V_{N2}/V_{N1} is shown as the top curve in the plot.
b. If capacitors C are added, it has the effect of increasing C_{1G}, which decreases the maximum coupling while keeping the breakpoint constant. This is shown as the middle curve in the plot.
c. Shielding cable 1 reduces C_{12} to a value C'_{12}. This lowers the maximum coupling further and also increases the break frequency. This is shown as the bottom curve in the plot. A second effect of shielding is to increase capacitance C_{1G}, which further decreases the coupling.

PROBLEM 2-4

377 μV.

PROBLEM 2-5

The magnetic field pickup is of opposite polarity on either side of the crossover, thereby canceling the noise voltage.

PROBLEM 2-6

$$M = \frac{\mu}{2\pi} \ln\left(\frac{b^2}{b^2 - a^2}\right)$$

PROBLEM 2-7

a. 58×10^{-9} H/m.
13×10^{-9} H/m.
6×10^{-9} H/m.

b. 36 mV/m.

PROBLEM 2-8

The mutual inductance is less than, or equal to, the self-inductance of the circuit producing the magnetic flux.

PROBLEM 2-9

a. $1/r$.

b. $1/r^2$.

PROBLEM 3-1

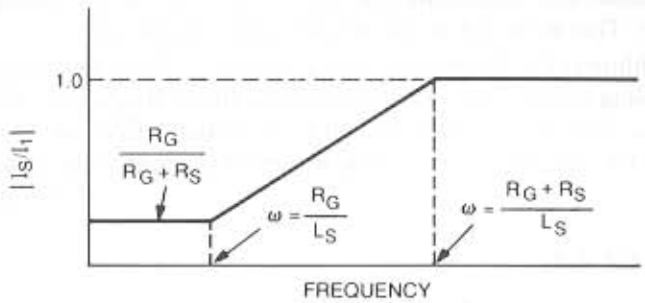

a. This solution is shown in the illustration.
b. $f_{98\%} = [5(R_G + R_S)]/2\pi L_S$.

PROBLEM 3-2

The addition of magnetic material increases the shield inductance and hence decreases the shield cutoff frequency.

PROBLEM 3-3

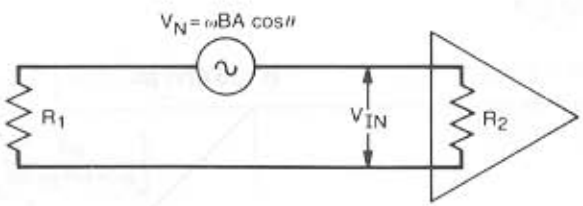

For magnetic coupling, we have the equivalent circuit shown.

a. $V_{IN} = V_N R_2/(R_1 + R_2)$
b. The total voltage (V_N) magnetically coupled into the circuit is not a function of the values of resistors R_1 and R_2. However, how this voltage distributes itself between resistors R_1 and R_2 is a function of their relative values.

PROBLEM 3-4

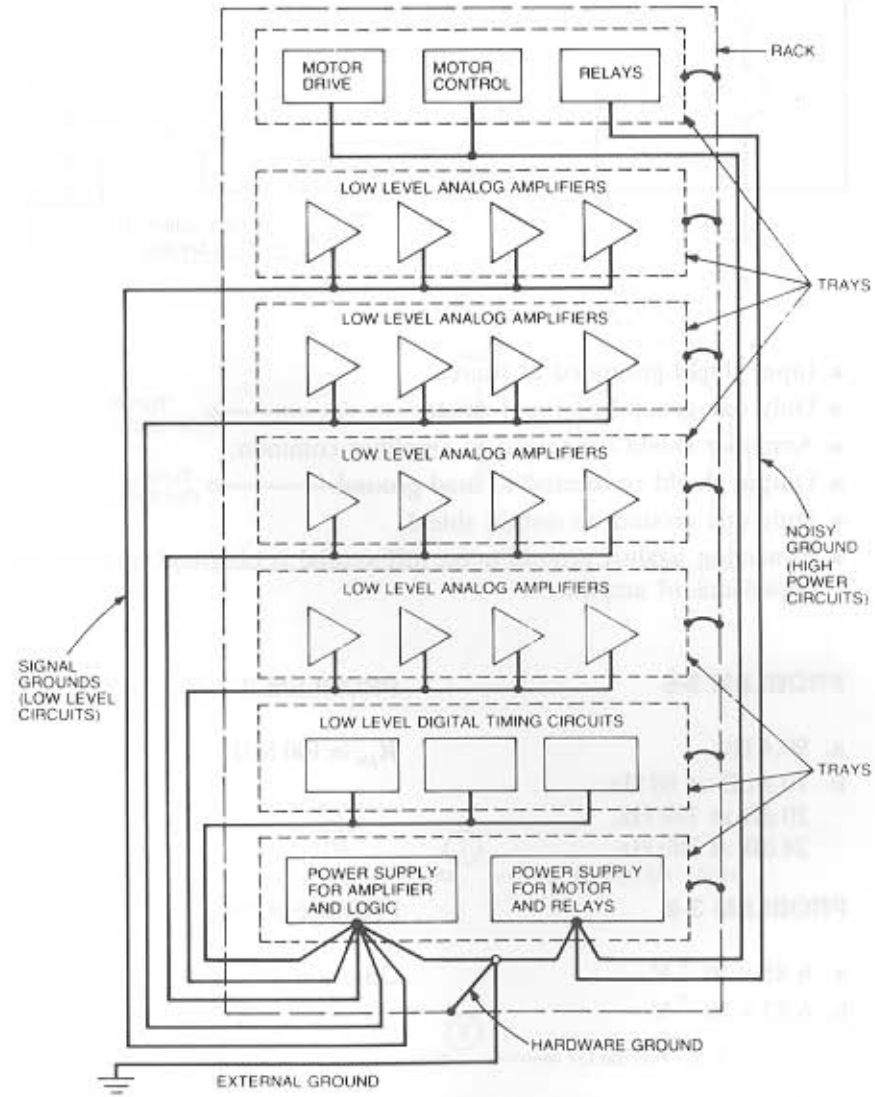

PROBLEM 3-5

This arrangement has the following advantages:

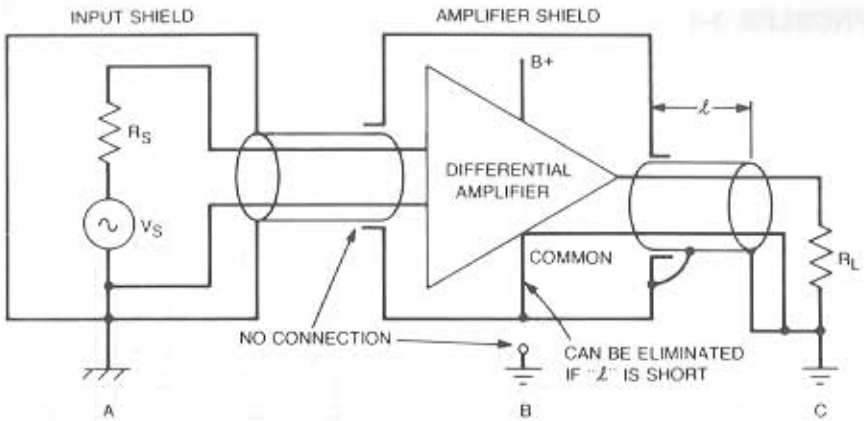

- Input shield grounded at source.
- Only one ground on input shield.
- Amplifier shield connected to amplifier common.
- Output shield connected to load ground.
- Only one ground on output shield.
- Protection against ground noise differential is obtained by large input impedance of amplifier.

PROBLEM 3-6

a. 90.4 Hz.
b. 10.8 dB at 60 Hz.
20 dB at 180 Hz.
24 dB at 300 Hz.

PROBLEM 3-7

$R_{IN} \geq 100\ \text{M}\Omega$.

PROBLEM 3-8

a. 6.85×10^{-9} V.
b. 6.85×10^{-7} V.

PROBLEM 3-9

Question a.

- Maximum coupling exists between L_1 and L_3 since they are close together and parallel.
- Large capacitance exists between input and output leads.
- Ground lead is common to both the input and the output.
- Outside foil (banded) end of capacitors C_1 and C_2 are not grounded. (See Fig. 5-4.)

- Stray capacitance across L_2 is increased due to conductor between L_1 and C_1, and the conductor between L_3 and C_2 being close to and parallel to L_2.
- Long lead connecting L_1 to C_1 increases the inductance in series with C_1, thus lowering its self-resonant frequency.

Question b.
See the following figure.

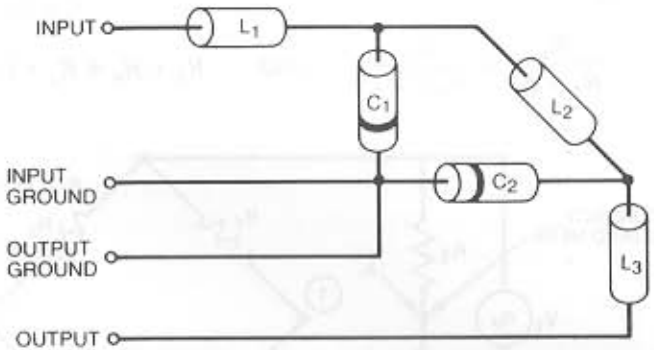

PROBLEM 3-10

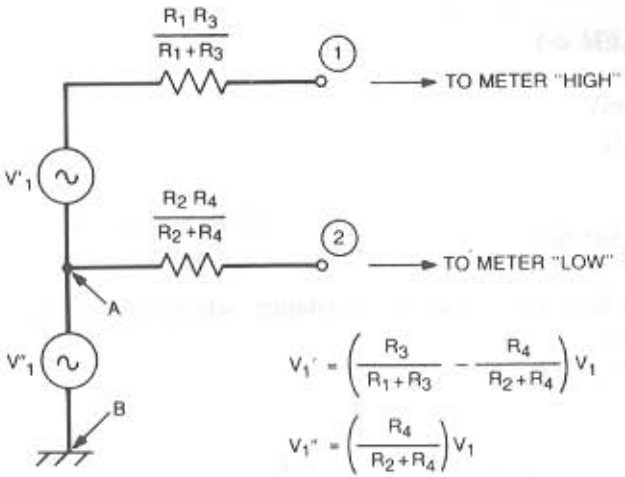

(a)

a. V_G and that portion of V_1 that appears across $R_4(V_1'')$.
b. Thevenin's equivalent circuit looking into terminals 1 and 2 is shown here. The ideal guard connection is to point A. Point A, however, does not exist in the actual circuit. There are therefore two possible alternatives.

1. Connect guard shield to point B.
2. A better solution, if required, is to generate a new point at the same potential as point A, and then connect the guard to this point. This is shown in the following figure, in which R_5 and R_6 must satisfy the following:

$$\frac{R_6}{R_5+R_6}=\frac{R_4}{R_4+R_2}, \qquad \text{and} \qquad R_5+R_6 \ll R_4+R_2 .$$

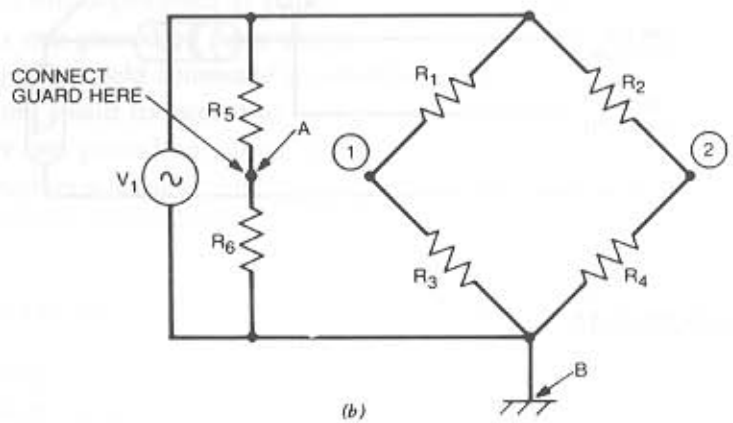

(b)

PROBLEM 4-1

a. 34.5 mV.
b. 1.26 Ω.

PROBLEM 5-1

a. $\delta = 1.61 \times 10^{-3}$ (use ac resistance when calculating the damping factor),
$f_r = 25$ MHz.
b.

$$V_n = \frac{I_n}{2j\omega C[(j\omega)^2 LC/2 + j\omega RC/2 + 1]} .$$

c. $V_n = 43.8$ mV.
d. Use ferrite bead number 1 on the power line between the two feed-through capacitors.
e. Using bead 1, which represents a 75-Ω resistor at 25 MHz,

$$V_n = 0.14 \text{ mV}.$$

The damping factor is $\zeta = 5.8$.

PROBLEM 5-2

21.2 dB.

PROBLEM 5-3

For $d = 0.0253$ in.

Frequency (MHz)	R_{ac}/R_{dc}
0.2	1.35
0.5	1.98
1	2.69
2	3.70
5	5.70
10	7.95
50	17.47

PROBLEM 5-4

a. $R_{dc} = 5.25 \times 10^{-3}$ Ω per 100 ft.
b. $R_{1\text{MHz}} = 0.317$ Ω per 100 ft.

PROBLEM 6-1

Silver: $|Z_s| = 3.6 \times 10^{-5}$ Ω.
Brass: $|Z_s| = 7.2 \times 10^{-5}$ Ω.
Stainless: $|Z_s| = 5.8 \times 10^{-3}$ Ω.

PROBLEM 6-2

Frequency (kHz)	Skin Depth (in.)	Absorption Loss (dB)
0.1	0.51	1.1
1.0	0.16	3.3
10	0.05	10.6
100	0.02	33.4

PROBLEM 6-3

Using nonferrous material, this would require a shield thickness of 1.2 in. or more; this is impractical.

Using steel, however, the shield would have to be 0.12 in. thick; this is considerably more reasonable. A high-permeability material such as mu-metal could also be used—in this case the required thickness would be less than the 0.12 in. required for steel.

PROBLEM 6-4

a. 138 dB.
b. 138 dB.

PROBLEM 6-5

24 dB.

PROBLEM 6-6

133 dB.

PROBLEM 6-7

218 dB.

PROBLEM 6-8

Greater than 313 MHz.

PROBLEM 6-9

Thickness (in.)	Absorption Loss (dB)
0.020	2.11
0.040	4.23
0.060	6.34

PROBLEM 6-10

- Steel walls—good absorption loss.
- Tin plate—increases reflection loss.
- Multiple layer shield (tin–steel–tin).
- Soldered seams.
- Pressure contact lid.

PROBLEM 6-11

1 in.

PROBLEM 7-1

270 Ω in series with 0.1 μF across the load or the contact.

PROBLEM 7-2

Approximate waveshapes are shown in the following figures:

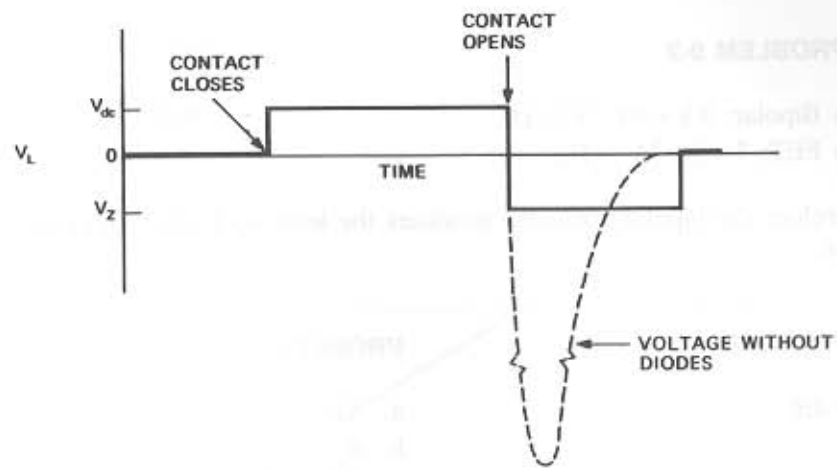

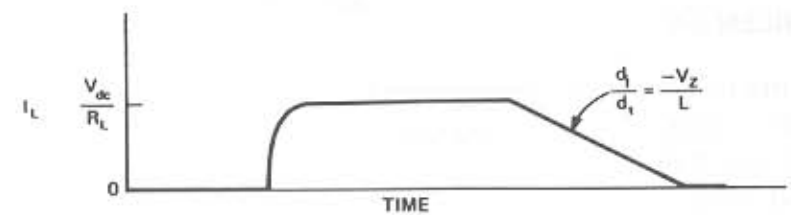

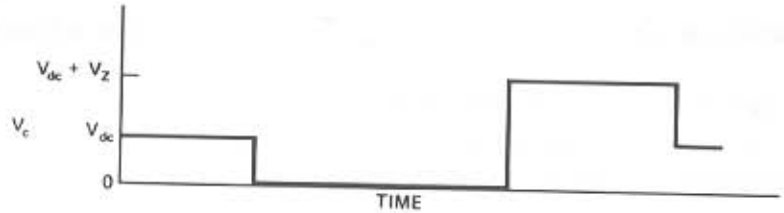

PROBLEM 8-1

a. 0.91×10^{-6} V.
b. 1.01×10^{-6} V.

PROBLEM 8-2

8.33×10^{-9} V/$\sqrt{\text{Hz}}$.

PROBLEM 8-3

a. 179 μV.
b. 179 μV.

PROBLEM 8-4

110×10^{-9} V.

PROBLEM 8-5

10×10^{-9} V/$\sqrt{\text{Hz}}$.

PROBLEM 9-2

- Bipolar: 3.8×10^{-8} V/$\sqrt{\text{Hz}}$.
- FET: 7×10^{-8} V/$\sqrt{\text{Hz}}$.

Therefore the bipolar transistor produces the least equivalent input device noise.

PROBLEM 9-3

14.9 dB.

PROBLEM 9-4

a. $NF = 5.4$ dB.
b. $R_s = 300$ kΩ.
$NF = 4.0$ dB.

PROBLEM 9-5

a. Turns ratio = 100.
b. $NF = 0.5$ dB.
c. $NF = 27.9$ dB.
d. SNI = 556.

PROBLEM 9-6

a. 5 μV.
b. The inherent noise immunity of FM allows operation at a lower signal-to-noise ratio, and the 75-Ω transmission line has less thermal noise than a 300-Ω system. Also the smaller bandwidth allows less noise into the system.

PROBLEM 9-7

3 dB.

PROBLEM 9-8

a. $F = 1.11$, $R_s = 26{,}500\ \Omega$.
b. $F = 1.25$, $R_s = 572\ \Omega$.

PROBLEM 9-9

$NF = 6$ dB.

PROBLEM 10-1

a. 0.01 μF.
b. 13 MHz.

PROBLEM 10-2

39.2 MHz.

PROBLEM 11-1

a. 12 dB μV/m.
b.

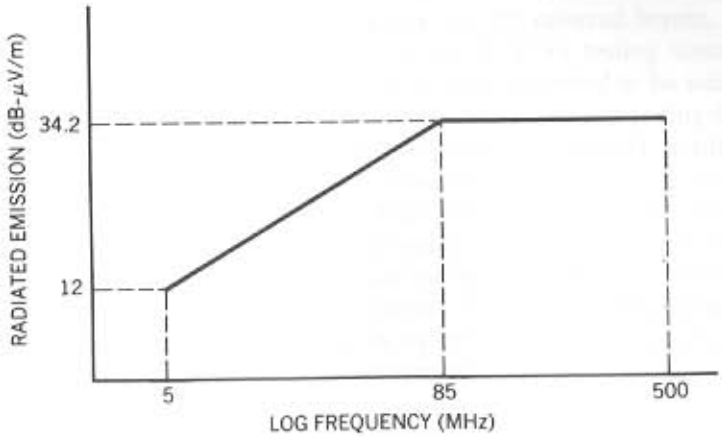

c. 34 dB μV/m.
d. 6 dB margin.

PROBLEM 11-2

56.3 dB μV/m.

PROBLEM 11-3

4 in.

PROBLEM 12-1

a. 1.4 pF.
b. 169 pF.

PROBLEM 12-2

Polyester: negative.
Aluminum: positive.

APPENDIX F
ELECTROMAGNETIC COMPATIBILITY TESTING PROCEDURES

The measurement procedures used by the FCC to determine compliance with the radiated and conducted emission requirements of the Computing Device Rules (Part 15, Subpart J) are described in FCC Measurement Procedure MP-4 (1983)*. An edited version of the text of MP-4 is reproduced in this appendix. Some figures have been renumbered.

FCC METHODS OF MEASURMENTS OF RADIO NOISE EMISSIONS FROM COMPUTING DEVICES

1.0 SCOPE

This standard sets forth uniform methods of measurement of radio noise emitted from computing devices defined in Section 15.4 of the FCC Rules. The technical standards for computing devices are set forth in Subpart J of Part 15 of the FCC Rules (47 CFR Part 15J). Methods for the measurement of radiated and power-line-conducted radio noise are covered herein. These methods of measurement will be used by the FCC in testing computing systems, computing devices, and peripheral devices intended to be used with computing devices. Applicants for certification of Class B computing devices should employ these methods. Parties required to conduct verification testing of computing systems should take note of these procedures insofar as they apply to testing of such systems. This will ensure that the tests they conduct can be expected to provide reasonable assurance that the resulting technical data will correlate with the results of tests conducted in accordance with this standard on such computing systems. Sampling testing of certified or verified computing devices of systems by the FCC will be conducted in accordance with these methods of measurement.

*Since the FCC may make changes to these procedures, the most current issue should be referred to when making compliance measurements.

2.0 REFERENCE STANDARD

The following will form a part of this standard to the extent applicable: American National Standard Specifications for Electromagnetic-Interference and Field Strength Instrumentation, 10 kHz to 10 GHz, ANSI C63.2 (1980).

3.0 DEFINITIONS

The definitions in Parts 2 and 15 of the FCC Rules and the following definitions will apply to the use of this standard.

3.1 Equipment under Test (EUT)

A representative computing device or system, peripheral, etc., being tested or evaluated.

3.2 Ambient Level

The magnitude of radiated or conducted signals and noise existing at a specific test location and time.

3.3 Emission

Electromagnetic energy produced by a device that is radiated into space or conducted along wires and is capable of being measured.

3.4 Ground Plane

A conducting surface used to provide uniform reflection of an impinging electromagnetic wave. Also the common reference point for electrical potentials.

3.5 Line-Impedance Stabilization Network (LISN)

A network (sometimes called a mains network) inserted in the supply mains lead of the EUT that provides a specified measuring impedance for radio-noise voltage measurement and isolates the EUT and the measuring equipment from the supply mains at radio frequencies.

3.6 Radio Noise

Electromagnetic energy in the radio-frequency range that may be superimposed upon a wanted signal.

3.7 Radiated Radio Noise

Radio noise radiated into space. Such noise may include both the radiation and induction components of the field.

3.8 Conducted Radio Noise

Radio noise propagated from the device back into public electrical power network via the supply cord.

3.9 Random Noise

Electromagnetic disturbance (noise) originated in a large number of discrete disturbances with random occurences in time and amplitude. The term is most frequently applied to the limiting case where the number of transient disturbances per unit time is large, so that the spectral characteristics are the same as those of thermal noise (thermal noise and shot noise are specific cases of random noise).

3.10 Narrowband Radio Noise

Radio noise having a spectrum exhibiting one or more sharp peaks, narrow in width compared to the nominal bandwidth of the measuring instrument, and far enough apart in frequency to be resolvable by the instrument.

3.11 Broadband Radio Noise

Radio noise having a spectrum broad in width as compared to the nominal bandwidth of the measuring instrument, and whose spectral components are sufficiently close together in frequency that the measuring instrument cannot resolve them.

4.0 GENERAL TEST CONDITIONS

4.1 Test Sites

An environment which ensures valid, repeatable measurement results is required. A measurement is valid to the extent that it is a true representation of the characteristic being measured, and when the same measurement procedure yields repeatable results. For radiated measurements on representative samples of an equipment type, testing is normally conducted in an open field (see Section 4.1.1). Other alternatives are permitted (see Sections 4.1.1.1 and 4.1.1.2). For equipment that can only be tested in its place of use, and the conditions of 4.1.1.1 cannot be satisfied, then the conditions of Section 4.1.2 will apply. A description of the test facility used for testing computing devices subject to certification shall be filed with the Commission, pursuant to Section 15.38 of the FCC Rules (47 CFR Section 15.38).

4.1.1 Open Field Tests. Measurements of radiated radio noise should be made in an open, flat area characteristic of cleared, level terrain. For details on how to set up a suitable site, see FCC Bulletin OST 55: Characteristics of Open Field Test Sites, available from the FCC Consumer Assistance Office, Washington, D.C. 20554. Measurements made by the Commission will be performed on an open field test site.

4.1.1.1 Tests at Laboratory, Factory, or Other Facilities. Compliance with the FCC limits for computing devices shall be based on tests being made on an open field test site, or equivalent, unless measurements are made at the user's premises for a unique installation as per Section 4.1.2. Where it can be shown that the results of tests made in a laboratory, factory, anechoic room, dedicated factory site, or other facility are correlatable to those made in an open field site, such test results will be considered acceptable. Sufficient tests over the entire frequency range of 30 to 1000 MHz shall be made to demonstrate that the alternative site produces results that correlate with the results of tests made in an open field. In the event that the Commission tests a sample device, measurements will be made in an open field and the results obtained will determine compliance.

4.1.1.2 Testing in a Shielded Enclosure. Radiation measurements made in a shielded enclosure are suitable only for determining the frequency profile of an EUT; they are not suitable for determining the actual levels of the emissions, unless it can be shown that the results of tests made in the enclosure are correlatable to those made in an open field. Conducted radio noise measurements made in a shielded enclosure are acceptable and in fact are preferable.

4.1.2 Testing at User's Installation (On-Premises Testing). Testing is permitted at the end user's premises, where the conditions of Sections 4.1.1 or 4.1.1.1 cannot be satisfied. In this case both the equipment and its location are considered the EUT. The radiated emission results are unique to the installation site because site-containment properties affect the measurement. The conducted emanation results also may be unique to the installation. However, where testing of a given system has been accomplished at three or more representative locations, the results can be considered representative of all sites for purposes of determining compliance with emission requirements. See Sections 4.7 and 6.3.

4.1.3 Individual Equipment Test Requirements. In some cases it may be necessary to develop a set of explicit requirements specifying the test conditions, EUT operation, etc., to be used in testing a specific EUT or a specific class of EUTs for radio noise emissions. Such requirements shall be documented in the report of measurements for the EUT and may be used in determining compliance with FCC limits. It would be advisable to obtain concurrence from the Commission that the special requirements and procedures to be followed are satisfactory before actually performing the measurement.

4.2 Measurement Instrumentation

Measurements of radiated and conducted radio noise shall be made with a radio noise meter conforming to the American National Standard Specifications for Electromagnetic Interference and Field Strength Instrumentation 10 kHz to 10 GHz, C63.2 (1980). Alternatively, a spectrum analyzer may be used as the measuring instrument, provided that it is used, when necessary, with appropriate accessories to provide sufficient sensitivity and overload protection to ensure accurate, repeatable measurements of all emissions over the specified frequency range. Other instruments may be used for certain restricted and specialized measurements when data so measured are correlated to data achieved with C63.2 instrumentation.

Note: Accessories needed would depend on the measurement situation and could include preamplifiers for sensitivity improvement, filters and/or attenuators for overload protection, and additional quasi-peak detection circuitry. Overload is defined as harmonic distortion, intermodulation, or gain compression of spectrum analyzer input signals. Precautions may have to be taken to ensure that the spectrum analyzer operates linearly before taking final measurements. Consult the appropriate user's manual for instructions and guidance. Application notes on the use of spectrum analyzers and other instruments are also available from several manufacturers.

4.2.1 Measuring Instrument Calibration. The calibration of the measuring instrument, including any accessories that may affect such calibration, shall be checked frequently enough to ensure its accuracy. Adjustments shall be made and correction factors applied in accordance with instructions contained in the manual for the measuring instrument.

4.2.2. Detector Function Selection and Bandwidth. During radiated emission testing, radio noise meters, or spectrum analyzers which include weighting circuits, shall have the detector function set to the CISPR quasi-peak function. The 6-dB bandwidth of the measuring instrument shall not be less than 100 kHz for field strength measurements over the frequency range of 30 to 1000 MHz. During conducted voltage testing, radio noise measuring instruments shall have the detector function set to the CISPR quasi-peak function. The 6-dB bandwidth of the necessary measuring instrument shall not be less than 9 kHz over the frquency range 450 kHz to 30 MHz. Post detector video filters, if used, shall be wide enough not to affect the peak detector reading. Alternatively, field strength meters and spectrum analyzers without CISPR weighting circuits may be employed, provided measurements are made on the peak basis and are recorded as observed (without any presumed correction for the difference between CISPR quasi-peak and peak detector function).

Notes

1. The bandwidths specified here have tolerances as prescribed in ANSI standard C63.2-1980.
2. If bandwidths greater than those expressed in Section 4.2.2 are used, higher readings may result for EUTs with broadband emanations.
3. Data taken with measuring instrumentation that employs logarithmic amplifiers when using the average function will represent the average of the logarithm of the voltage level. If the emanation observed is pulsed, broadband observed values will be materially lower than the true average of voltage. Instrument overload is likely to occur with linear IF systems if the emission pulse duty cycle is less than that for which the measuring instrumentation is rated. Data correction for spectrum analyzer observation should include corrections for the pulse desensitization factor; with this correction applied to peak indications, if the duty cycle is known or can be measured, average values of emanation can be calculated.
4. For line-conducted tests, if the equipment exhibits emissions that exceed the limit under the above-specified conditions, the following option may be exercised. The measurements may be made in the average mode within a 9-kHz minimum bandwidth. If the signal level in average mode is significantly less than in peak or quasi-peak mode, the emission is considered broadband, and the quasi-peak value may be reduced by 13 dB for comparison to the limit.

4.2.3 Units of Measurement. Measurements of radiated interference shall be reported in terms of microvolts per meter, or dB (μV/m) at a specified distance. The indicated readings on the radio noise meter or spectrum analyzer shall be converted to microvolts per meter, or dB (μV/m) by use of appropriate conversion factors. Measurements of conducted interference shall be reported in terms of microvolts or dB (μV).

4.2.4. Antennas. A calibrated, tuned, half-wave dipole antenna is preferred for measuring the level of radiated emissions. Other linearly polarized antennas are acceptable, provided the results obtained with such antennas are correlatable to levels obtained with a tuned dipole. The antenna shall be capable of measuring both horizontal and vertical polarizations. Over the frequency range of 30 to 1000 MHz, the Commission will use tuned half-wave dipole antennas for compliance testing.

4.2.4.1 Antenna-to-Test Unit Distance. The distance between the EUT and the measurement antenna may by 3 to 30 m. An EUT subject to a radiated limit at 3 m shall be measured at a distance of 3 m, unless impractical because of size of the equipment, location, etc., in which case

measurements may be made at a futher distance up to 30 m, and the results extrapolated inward, utilizing an inverse distance extrapolation factor (i.e., 20 dB/decade). Equipment subject to a limit at 30 m may be measured at a distance of from 3 to 30 m, provided that the results are extrapolated to equivalent signal at 30 m, utilizing an inverse distance extrapolation factor (20 dB/decade).

The horizontal distance between the measuring set antenna and the EUT shall be measured from the closest point of the device or system, as determined by the boundary defined by an imaginary straight line periphery describing a simple geometric configuration enclosing the EUT system. All intrasystems cables and connecting devices shall be included within this boundary.

4.2.4.2 Antenna Height Variation. The measurement antenna must be varied in height above ground to obtain the maximum signal strength. For measurement distances up to and including 10 m, the antenna height shall be varied from 1 to 4 m. Beyond 10 m, the height shall be varied from 2 to 6 m. These height scans apply for both horizontal and vertical polarization, except that for vertical polarization the minimum height should be increased so that the lowest point of the bottom end of the dipole (or other antenna), at any frequency, clears the site ground surface by approximately 25 cm.

At sites other than open field, alternative scanning heights and procedures may be used, provided that it can be shown that equivalent results are obtained.

4.2.5 Preliminary Testing and Monitoring. It is often valuable to perform preliminary radiated measurements at a closer distance than specified for compliance to determine the emission characteristics of the EUT. At close-in distances it is easier to determine the spectrum signature of the EUT and, if applicable, the EUT configuration that produces the maximum level of emissions as discussed in Section 4.5.1. A site other than an open field may be used for this purpose, but the test engineer should be aware that the alternate site may not produce precisely correlatable results. Where a radio noise meter is used for this spectrum search, it is recommended that either a handset or loudspeaker be connected as an aid in detecting ambient signals and finding frequencies of significant emission from the EUT.

Preliminary testing is optional. However, if preliminary tests are not performed, the steps outlined above (spectrum signature, EUT arrangement) must be accounted for when making tests at the distance used on the open field site.

4.3 Frequency Range to Be Scanned

For radiation measurements, the frequency range from 30 to 1000 MHz shall be searched. For conducted measurements, the frequency range from

450 kHz to 30 MHz shall be searched. The six highest emissions relative to the appropriate limit shall be measured and reported. To facilitate testing with a radio noise meter, the frequency range covered in the particular test should be scanned while monitoring with a headset or loudspeaker. If any indicated peaks appear while scanning, readings shall be taken at the frequencies where they occur. The scan rate shall be such that noise signals above the radio noise meter sensitivity threshold are not omitted from detection.

Note: Automatic scan techniques are acceptable but the maximum scan speed is limited by the response time of the measuring system and (where applicable) the repetition rate of the radio noise to be measured.

4.4 Data-Reporting Format

The measurement results expressed in accordance with Section 4.2.3, and with specific limits where applicable, shall be presented in tabular or graphic form, or alternatively as recorder charts or photographs of a spectrum analyzer display, showing the level versus frequency. Since alternate test methods are provided, test data must identify the methods used. Instrumentation, instrument attenuator and bandwidth setting, detector function, EUT arrangements, a sample calculation with all conversion factors, and all other pertinent details shall be included along with the measurement results.

The justification for selecting a particular EUT configuration as tending to produce maximized emissions must be documented in the test report. The test report should also show precisely how the interface cables were finally arranged when the measurements were made.

Note: In the case of devices required to be certified, refer also to Part 2 (Sections 2.909, 2.925, 2.926, and 2.1003) and Part 15 (Sections 15.38, 15.44, 15.45, 15.46 and 15.79) of the FCC Rules for general provisions applicable to all applications for certification.

4.5 Configuration of Equipment under Test (EUT)

It is recommended that all multi-unit systems be tested first as a basic system, consisting of the system controller plus one peripheral of each type proposed for use with that controller. Additional peripherals may then be tested with the basic system, as a host system, or with a simulator or exerciser. In the latter case the simulator or exerciser should first be tested to ensure that its shielding, etc., are adequate to ensure that its contribution to the emanations of the EUT/simulator combination are insignificant. If the computing device is designed to be connected to multiple peripherals, all of which are identical, it is only necessary to perform tests with one peripheral of that type connected.

4.5.1 Test Conditions and Configurations of EUT. The equipment under test (EUT) shall be configured and operated in a manner that tends to maximize its emission characteristics in a typical application. Power and signal distribution, grounding, interconnecting cabling, and physical placement of equipment or equipments of a test system shall simulate the typical application and usage insofar as practicable. The EUT shall be furnished with rated (nominal) voltage as specified in the individual-equipment power requirements. The power supplied to the EUT may need to be filtered to meet the requirments of Section 4.6.1. See Fig. F-1.

The configuration that tends to maximize emissions is not usually intuitively obvious, and in most instances selection will involve some trial-and-error testing. For example, interface cables may be shifted or equipment reoriented during initial stages of testing and the effect on results observed. For large systems with numerous cables, trial-and-error type tests may better yield to experience and knowledge about the characteristics of the EUT. Only those configurations that are within the range of positions likely to occur in normal use need be considered. In any event there must be a definite justification for selecting a particular configuration.

4.5.2 Operating Conditions. The EUT shall be operated at the specified load conditions (mechanical and/or electrical) for which it is designed. Loads may be actual or simulated, as described in the individual equipment requirments.

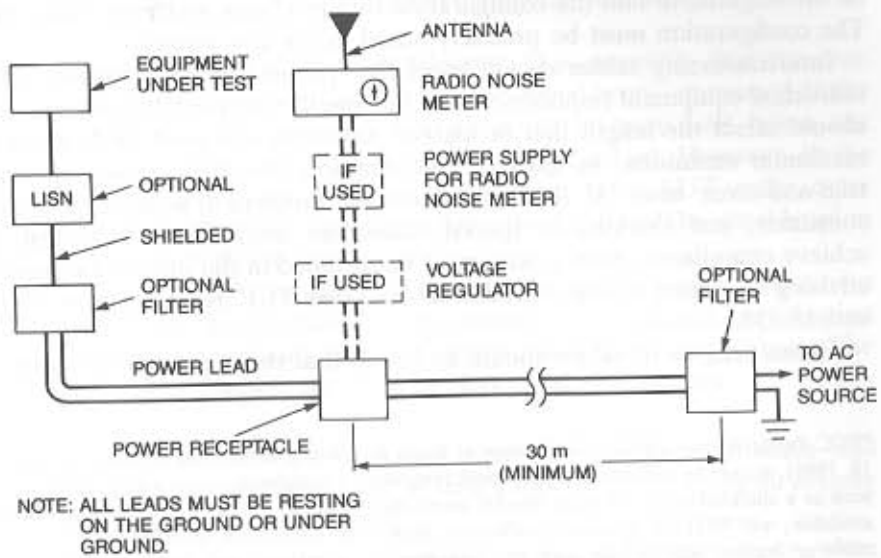

Figure F-1. *Suggested power distribution layout for open field tests.*

4.5.3 Conditioning of the EUT. The EUT shall be operated for a sufficient period of time to approximate normal operating conditions.

4.5.4 Interfacing Units and Simulators. In case the EUT is required to interact functionally with other units, either the actual interfacing units or simulators may be used to provide representative operating conditions, provided the effects of the simulator can be isolated or identified. It is important that any simulator used in lieu of an actual interfacing unit properly represents the electrical, and in some cases the mechanical, characteristics of the interfacing units, especially concerning rf signals and impedances.

Because of the added degree of uncertainty when a simulator is used, such use should be avoided if possible. If a device is designed to be used with a specific host computer or peripheral subject to mandatory compliance, it must be tested with that computer or peripheral.

If the EUT is a peripheral device being separately measured for compliance to a limit on radio noise, the EUT must be tested with at least one host computer or simulator in a typical configuration. It is not necessary to test the EUT with all possible host computers or in all potential configurations.

4.5.4.1 Interface Cables. It is imperative that interface cables be connected to available interface ports on the EUT. This includes, but it is not limited to, standard interface bus ports (IEEE 488, RS-232-C, etc.) provided on computers and peripherals. The effect of varying position of the cables must be investigated to find the configuration that produces maximum emissions. The configuration must be precisely noted in the test report.

Interconnecting cables should be of the type and length specified in the individual equipment requirements. If the length may vary, the test engineer should select the length that in his/her judgment will most likely produce maximum emissions. In general, this decision should be based on some trial-and-error tests. If the cables will be purchased separately by the consumer, and shielded or special cables are used during FCC tests to achieve compliance, then a note must be included in the instruction manual advising the need to use shielded cables.* See FCC Rule Sections 15.818 and 15.838.

Excess lengths of cables should be bundled at the approximate center of

*FCC Public Notice #6978, *Clarification of Rules for Testing Computing Devices* (September 18, 1986), states the following: "A personal computer or peripheral tested with a special cable, such as a shielded cable, or other special accessories required for compliance and not readily available, will NOT be granted centification, unless the application specifies that the special cable or feature will be sold with the computer or peripheral, and the instructions to the operator indicate that such special cable or feature must be used."

the cable with the bundles 30 to 40 cm in length. If it is impractical to do so because of cable bulk or stiffness, or because the testing is being done at a user installation, disposition of the excess cable is left to the test engineer.

Where there are multiple interface ports all of the same type, connecting a cable to just one port of that type is sufficient, provided it can be shown that the additional cables would not significantly affect the results. Here again, the test engineer must use judgment as to what is appropriate for a particular EUT.

Products that provide a unique interface port for peripherals that are not yet available may be tested by attaching a cable, extended 1 m vertically above the device and left unterminated.

4.5.5 EUT Grounding. The EUT shall be grounded in accordance with the manufacturer's requirements and conditions of intended use. If the EUT is operated without a ground connection, it shall be tested ungrounded. When the EUT is furnished with a grounded terminal or internally grounded lead that is to be connected in actual installation conditions, the ground lead or connection shall be connected to the ground plane (or facility for earth ground), simulating actual installation conditions. Any internally grounded lead included in the plug end of the line cord of the EUT will be connected to ground through the utility power service (see also Sections 5.1 and 5.4).

4.6 Test Environment

The environment at the test site should satisfy the following conditions:

4.6.1 Ambient Radio Noise and Signals. It is desirable that the conducted and radiated ambient radio noise and signal levels, measured at the test site with the test sample de-energized, be at least 6 dB below the allowable limit of the applicable specification or standard. However, in the event that the measuring levels of the ambient plus EUT radio noise emissions are not above the applicable limit, the EUT shall be considered to be in accordance with the limit.

If the ambient field or power-line ambient level at some frequencies within the specific measurement ranges exceeds the applicable specification limit(s), other test methods may be used to show EUT compliance. The following would constitute some of the acceptable alternatives:

- Perform measurements at closer than the specified distances and extrapolate the result(s) to the specified limit distance, using an inverse distance linear attenuation factor.
- Perform measurements of critical frequency bands during hours when broadcast stations may be off the air and industrial ambients are lower.

- Resort to measurement in an enclosure or anechoic room (see Sections 4.1.1.1 and 4.1.1.2 for conditions of use). Measurements made in a shielded (metal) enclosure are normally not acceptable for the purpose of determining compliance. However, observations may be made in such an enclosure to determine the relative levels of the emissions affected by ambient interference and also other EUT emissions in the same general frequency range. These observations taken together with measurements on the test site (at reduced bandwidth where necessary) may enable reasonably accurate determination of the strength of the EUT emission affected by ambient interference.
- Insert line filters between the power source and the LISN or between the power source and the EUT, as appropriate, for the particular measurement.

Note: In orienting the axis of a test site, it is desirable to consider the directions of strong ambient signals so that the orientation of the receiving antenna on the site discriminates against such signals insofar as possible.

4.6.2 Temperature. The ambient temperature of the testing location should preferably be within the range of 10°C to 40°C (50°F to 104°F), unless the individual equipment requirements specify testing over a wider temperature range. Measurements made in temperatures outside these limits may be accepted, provided the EUT, radio noise meters, all indicating devices, and equipment are at the testing location sufficiently long that their temperature becomes stabilized. Evidence shall be given that the calibrations of the measuring instruments used are accurate at the temperatures at which they are used.

4.7 Test Platform

An EUT that is normally operated on a table shall be placed on a nonconducting table having a height of 1 m above test site ground level. For ease of testing, the table may be placed on a rotatable platform, in which case the total height of the table plus the platform shall be approximately 1 m above test site ground level. If the platform is elevated, it should be nonconducting to the maximum extent practicable.

Measurements made on a test table of 80-cm height, as called for in some international measurement standards, will be accepted for verification or certification of compliance. Although the results will probably be only marginally different than with the 1-m height, the risk for discrepancies lies with the manufacturer. FCC tests will be performed at a height of 1 m.

In the event that all the units or peripherals of an EUT system will not fit on the table, one or more may be placed on nonconductive shelves below the table top, using the minimum spacing below the top for their placement. In selecting units for placement on the shelf, first preference should be given to those normally not requiring frequent attention.

For an EUT normally located on the floor, the equipment should, if practicable, be placed on a rotatable platform. If the platform is elevated, it should be nonconducting to the maximum extent practicable and have a height of not more than 0.5 m above ground level. The EUT shall be located in the center of the platform. If the EUT consists of two or more units, these units shall be arranged around the center of the platform consistent with actual use.

4.8 Ground Plane

A ground screen is desirable, but not mandatory, for radiated emissions tests. It is pointed out, however, that open field sites are likely to need a ground screen when any of the following conditions exist at the site: the terrain is discontinuous, the terrain is subject to extreme seasonal variations in ground conductivity, there are unburied power or control cables, or the site is located on pavement.

For conducted power-line measurements, a ground plane shall be used, as discussed in Section 5.1.

4.8.1 Testing at the User's Installation (On-Premises Testing). A ground plane need not be installed for testing at a user's installation unless it is to be a permanent part of the installation.

5.0 CONDUCTED POWER-LINE MEAUREMENTS

Unless otherwise specified, measurements shall be made to determine the line-to-ground radio noise voltage that is conducted from the EUT power-input terminals directly connected to a public power network. The measurements are to be made with the EUT connected to such a network through a nominal, standardized rf impedance, which is to be provided by a line-impedance stabilization network. A network must be inserted in series with each current-carrying conductor in the EUT power cord.

Note: It is recommended that conducted power-line measurements be made before measurements of radiated emissions because this procedure, which is carried out indoors, requires rather little time as compared to radiated measurements and can give some assurance that the shielding of the EUT is reasonably effective (at least at the lower frequencies).

5.1 Conducted Power-Line Test Configurations

The EUT shall be placed 40 cm from an earth-grounded conducting surface 2 m^2 (e.g., the floor of the test chamber) and shall be kept at least 80 cm from any other earthed conducting surface. Floor-standing equipment may of course be mounted on an earth-grounded floor.

If the EUT is supplied without a flexible power lead, it shall be placed at

a distance of 80 cm from the LISNs (or mains outlet where LISNs cannot be used) and connected to the LISNs by a lead of not greater than 1 m in length.

If the EUT is supplied with a flexible lead, the voltage shall be measured at the plug end of the lead. The length of the lead in excess of the 80 cm separating the EUT from the LISNs (or mains outlet where LISNs cannot be used) shall be folded back and forth to form a bundle not exceeding 30 to 40 cm in length.

If the EUT is normally operated in the hand, measurements shall be made as if it is normally operated while placed on a table or desk. Measurements of power-line conducted emanations are not required for devices capable of being operated only from internal batteries. If the EUT is fitted with a connection for operation directly or via separate transformer or power supply from public utility lines, measurements of power-line conducted emanations shall be made.

When computing devices or their peripherals have their own provision for connection to a power line, line-conducted tests must be performed separately for each device.

5.2 Line Probe

A line probe may be used for voltage measurements under certain conditions (see Section 5.6). If an appropriate LISN that satisfies the impedance requirements of Fig. F-2, and has the current capacity of the EUT, is not commercially available, the method shown in Fig. F-3 may be used. The measurements should be made between each current-carrying conductor in the supply mains and the ground conductor with a blocking capacitor C and a resistor such that the total resistance between line and ground is 1500 Ω. Since the line probe attenuates the radio noise voltage, appropriate calibration factors must be added to the measured values. Measurement results with the appropriate LISN shall take precedence over the method shown in Fig. F-3.

5.3 Line-Impedance Stabilization Network

A line-impedance stabilization network (LISN) having an impedance characteristic within the limits shown in Fig. F-2 is required for conducted radio noise measurements. Figure F-4 shows a network that will provide the specified impedance over the frequency range 0.45 to 30 MHz. A coaxial-type connector shall be provided for connecting of the measuring instrumentation by means of a 50-Ω terminating resistance across the 1000-Ω resistor. Provisions shall be made for electrically bonding the LISN enclosure to the ground plane used (see Section 5.1). If a direct bond is not possible, for instance, with concrete floors, a metal sheet approximately 2 m^2 shall be placed under the LISN and elecrically bonded to the LISN by a short low-impedance connection.

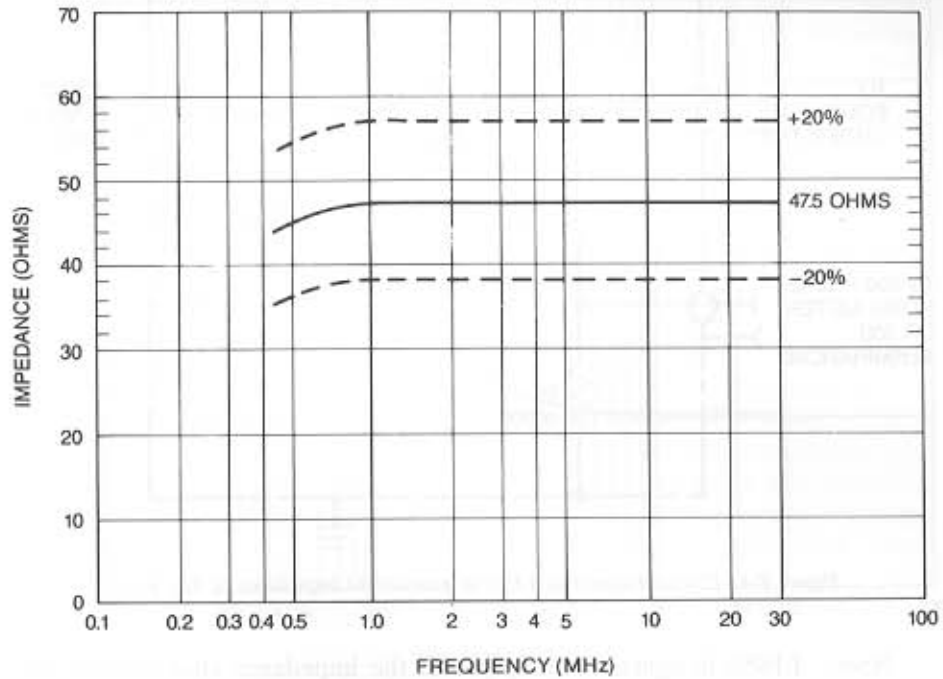

Figure F-2. *Impedance versus frequency characteristics of line impedance stabilization network (LISN). Allowable tolerance ±20%.*

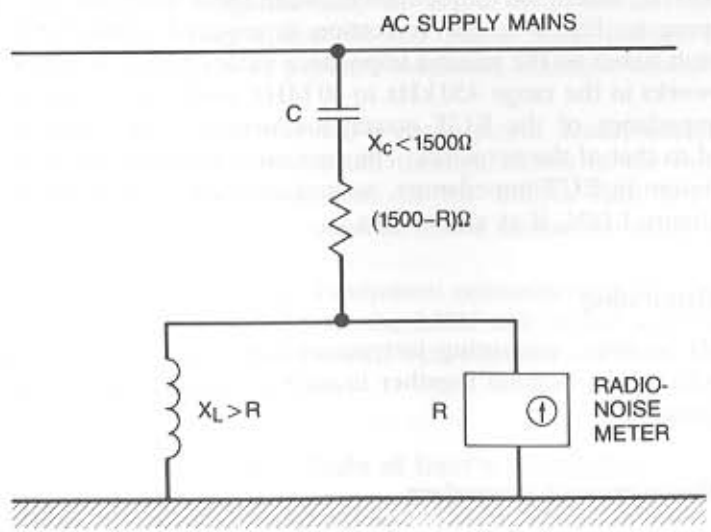

Figure F-3. *Line probe for conducted emission tests at user's installation.*

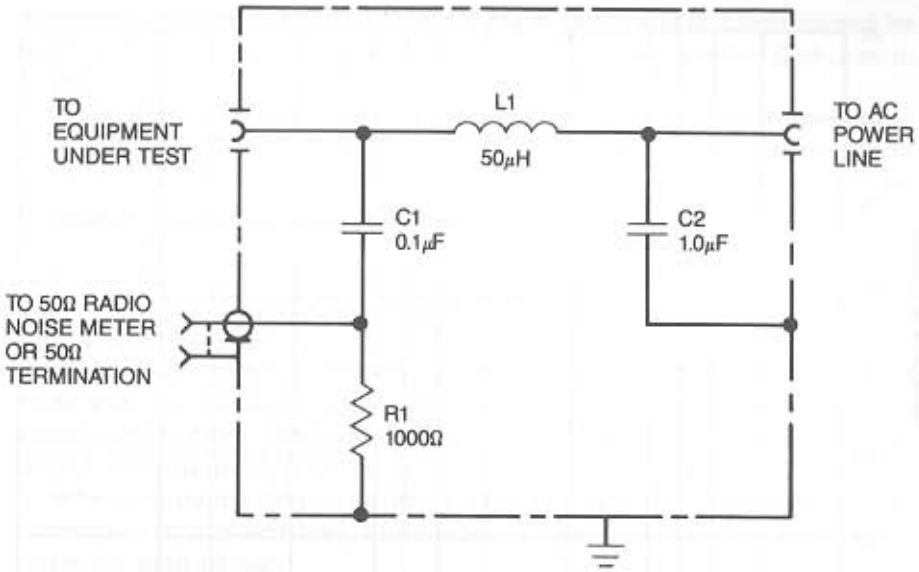

Figure F-4. *Circuit diagram of LISN to provide the impedance of Fig. F-2.*

Note: LISNs designed to comply with the impedance characteristic of Fig. F-2, have limited availability on the market. As an interim measure, 5-μhenry LISNs may be used, provided that the readings obtained using these networks are increased by adding a correction to obtain a value equivalent to that which would have resulted had a 50-μhenry network been used in the measurement. This correction varies from +10 dB at 450 kHz to 0 dB at 9 MHz; values for frequencies between these limits may be obtained by reference to Fig. F-5. No correction is required above 9 MHz. This correction is based on the relative impedance values of the 50- and 5-μhenry LISN neworks in the range 450 kHz to 30 MHz, and a presumption that the source impedance of the EUT power conductors in the range is low as compared to that of the networks. The correction has limited validity due to wide variation in EUT impedances, so measurements should be made with the 50-μhenry LISN, if at all possible.

5.4 Grounding

The LISN housing, measuring instrumentation case, ground plane, etc., shall be electrically bonded together in such a manner that they are at the same rf potential.

5.5 Measurement Procedure

Measurements of power-line conducted radio noise shall be expressed as the voltage developed across the 50-Ω port terminated by a 50-Ω measuring

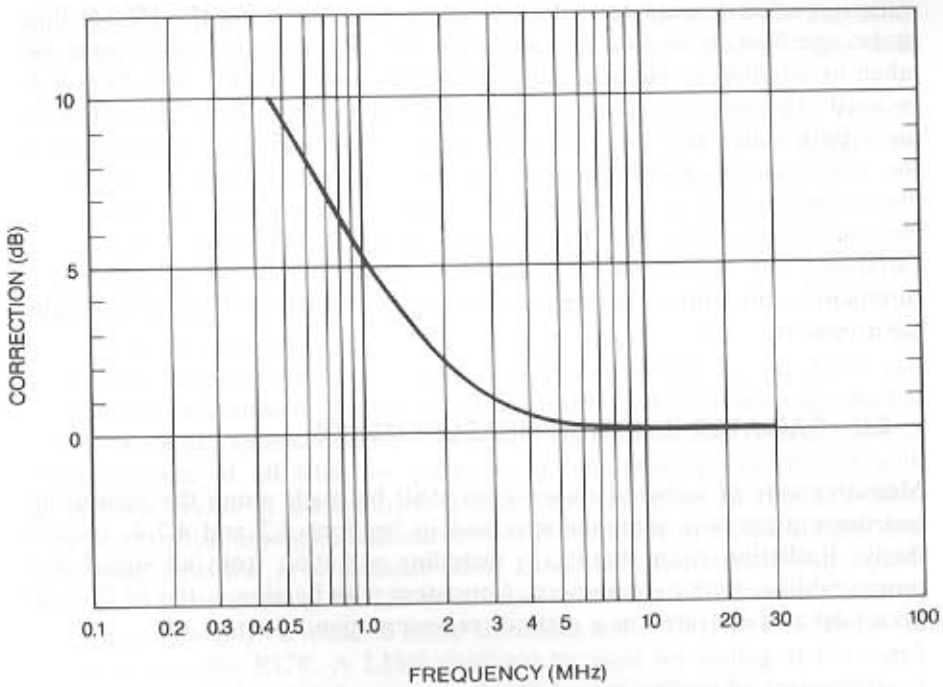

Figure F-5. *Correction factors to be added to readings obtained with a 5 μH LISN to obtain values equivalent to those that would be obtained with a 50 μH LISN.*

instrument. All voltage measurements shall be made at the plug end of the EUT power cord (e.g., by the use of mating plugs and receptacles on the EUT and LISN). Investigation shall be made to determine whether the position of interface cables affects the test results, and if it does, the cables should be positioned so as to produce maximum emission results.

5.5.1 EUT Power Leads. All EUT input power leads, except ground leads, shall be individually connected through LISNs to the input power source. All unused 50-Ω connectors of the LISNs shall be resistively terminated in 50-Ω when not connected to the measuring instrument.

5.5.2 Shielded Power Leads. Equipment normally used with unshielded power leads shall be connected to the LISN and tested with unshielded leads. If the EUT is normally operated with shielded or armored leads, the test shall be made using such leads.

5.6 Conducted Emission Tests at User's Installation (On-Premises Testing)

Testing for power-line conducted radio noise is permitted at the user's installation site, provided that no disturbance to the normal EUT in-

stallation exists, except to make provisions for connecting the 1500-Ω line probe specified in Section 5.2 and Fig. F-3. Special precautions must be taken to establish a reference ground for the measurements. No LISN shall be used. The measurements are dependent on the impedance presented by the supply mains and may vary with time and location due to variations in the supply-mains impedance. (It may be necessary to perform repeated measurements over a suitable period of time to determine the variation in measured values. The time period should be sufficient to cover all significant variations due to operating conditions at the installation.) Such measurement results should be regarded as unique to that EUT and installation environment.

6.0 RADIATED-EMISSION MEASUREMENTS

Measurements of radiated radio noise shall be made using the measuring instrumentation and antennae specified in Sections 4.2 and 4.2.4, respectively. Radiation from the EUT, including radiation from all signal and power cabling, shall be measured. Consistent with Section 4, the EUT shall be set up and operated in a manner representative of actual use.

6.1 Determination of Test Radial

Radiated-emission magnitudes shall be obtained in the azimuthal direction of maximum field strength for each predominate emission.

It is preferable to rotate the EUT to determine the direction of maximum field strength. A turntable arrangement may be used for convenience.

For large, heavy, and stationary electric equipment not readily rotated, the measuring instrument and test antenna may be moved around the EUT at as many points as are necessary to determine the direction of maximum field strength for each predominate emission. Parties making measurements on test sites where the EUT is not rotated should understand that the minimum clearances for a test site with rotatable platform are not applicable (see FCC Bulletin OST 55); instead, the minimum clearance distance for a test site without a platform is a circular area centered on the EUT location and having a diameter of 3 times the maximum distance between the measuring set antenna and closest point of the EUT.

Where the EUT is not rotated on the site, measurements should be made of the strength of each of the emissions noted in the preliminary tests in the azimuthal direction determined in those tests.

6.2 Radiated Radio Noise Tests

Radiated radio noise measurements shall be made at one of the test sites described in Section 4.1. The EUT shall be rotated as per Section 6.1, and

measurement antenna height varied as prescribed in Section 4.2.4.2 in order to obtain a maximum reading on the measurement instrument. Tests shall be made in both horizontal and vertical planes of polarization.

The frequency range 30 MHz to 1 GHz shall be investigated. For record-keeping purposes only the six highest emanations observed during the tests need be recorded and maintained in the permanent record files.

6.3 Radiated-Emission Tests at User's Installation (On-Premises Testing)

Testing of the installed EUT may be performed at the end user's installation, with the results generally regarded as unique to the EUT and installation environment. However, where testing has been accomplished at three or more representative locations, the results can be considered representative of all sites for purposes of determining compliance with emanation limits. If no detailed instructions are given in the individual equipment requirements, measurements shall be made to locate the radial of maximum emission at a distance 30 m from the equipment being tested. Where measurements at the 30-m distance from the EUT are impractical, measurements may be made at lesser distances and extrapolated to the 30-m distance from the EUT. A LISN shall not be used for testing at the user's installation in order that the measured radio noise voltage be representative of the specific site.

INDEX