that in the others, their bulk and, consequently, the resistance of the air remained the same.

The sparks and shocks, on breaking the battery circuit, were hardly sensible in No. 1; twice as great, at least, in No. 2 and 3; in No. 2 they were a little greater than in No. 3; but by far the most brilliant and powerful in No. 4.

I intend to make another engine soon, and shall construct its magnets of wires drawn from rectangular holes; if I have more success with it than I had with my last, you shall hear from me again.

I am, Dear Sir,
Yours truly,
J. P. JOULE.

LV. *Upon Telegraphic communication, especially by means of Galvanism. By* Dr. Steinheil, *Professor of Mathematics and Natural Philosophy, at the University of Munich, &c. &c. &c.**

Telegraphic communication may in its most general sense be defined as the method employed by one individual to render himself intelligible to others, and being, when viewed in this light, synonymous with intercourse is no human discovery, but one of the most wonderful gifts of nature, not to man alone, but in common with him to all social creatures is granted the faculty of communicating his sensations to others, and of exciting in them conditions similar to his own. Communication is the most powerful tie of the living creation; it connects one individual existence with another, reproduces in one what is granted to all, thus forming out of individuals, species, which in their turn present themselves as organic beings.

* Translated from the German by Julian Guggsworth.

There is assuredly nothing in nature more calculated to call forth our admiration than the contemplation of the variety of the means employed for attaining this mutual intelligence. From the undeciphered hieroglyphic signs of insects up to the complicated speech of man we observe a series of the most varied possibilities of reciprocal intercourse. In man, however, this gift of nature has attained an astonishing development, a development which in the form of speech and writing keeps pace with the march of his improvement, a development to which, as in the case of that improvement itself no absolute limits are assigned, and which equally with that improvement will struggle against those fundamental shackles of matter, time and space, till it extends them, fixed though they be, up to the unchecked ranging of mind. And as writing lays shackles on the passing sound and redeems it from fleeting time, so in like manner are the remotest distances to be annihilated and thoughts to be interchanged in an instant with those afar. The means of accomplishing this do not however lie directly within our reach; but by the patient observance of the powers and the phenomena of nature we render these subservient to us and make them the bearers of our thoughts, and it is this task which in the ordinary acceptation of the word is termed telegraphic communication.

In the works that have appeared, connected with this subject, we see that the natural phenomena thus applicable to the transmission of thoughts to remote distances are by no means few in number. We likewise at the same time observe that the choice of the signals, representatives of the ideas we transmit, admits of much variety. It must, however, be confessed that none of the proposed plans appear to amount to more than simple discoveries, and seem never to have originated in a leading fundamental idea of what conditions it is essential and indispensable to have in view. It has hitherto been considered sufficient to add another new possible means of corresponding to those already known, without examining whether there are not yet other methods better suited to the purpose and of greater simplicity. The more advisable course would be to establish at the outset what conditions are indispensable in complete telegraphic communication, and not to grapple with any difficulties with which the practical application of the scheme may be beset, for in most cases the method of carrying a plan into effect suggests itself to us as soon as we form a clear idea of what we have in view. Let us now make the attempt.

What we propose to attain by telegraphic communication is the transmission of ideas with the utmost rapidity at all times and to any distance; and when the distances are but moderate this problem is at once completely solved by speech. Hence for more considerable distances nothing more is required than that the telegraph should imitate speech. It appears to be evidently not the shortest way to make the telegraph imitate an imperfect method of communication. The signs for instance made use of by the deaf and dumb; it should be made to copy the most perfect of all methods of communication—speech, in which the sound as it falls on the ear of itself arrests the attention, and is at once understood.

At the first blush this appears to be a very difficult task, inasmuch as oral communication has such different sounds at its disposal, and is hence enabled to convey notions by means of a few combinations: and this difficulty no former arrangement of the telegraph has been completely able to surmount. Inventors previous to Gauss were bent on producing a vast number of distinct signals, without reflecting that this was only to be attained at the cost of simplicity. It escaped them that a rapid communication is to be attained by other means besides a multiplicity of signs, and that in point of fact one single sign, if it can be repeated with sufficient rapidity and employed in groups properly combined, is all that we require. In order to explain this I should wish to enter upon the analysis of our written language.

I select the great Roman letters for this purpose. They consist of six different signs, namely, a straight line in four positions, horizontal, perpendicular, sloping from left to right, and from right to left, and lastly a semicircle turned to the right or left. Of these six different signs never more than four are met with in the same letter, as in M and W. Now if we calulate how many different letters may be formed out of these six signs, never using above four of them however in the same group, we find the number amounts to no fewer than 1554; whereas we require but 25. We see from this example how much more numerous than the case called for has been the amount of signs employed in our written language.

Let us now suppose that we have but two kinds of signs and see if these are not quite sufficient for a complete series of letters. Let the signs be as simple as possible, each a dot for instance, and let them be distinguished by their position, that is to say, by one being always on a higher line than the other. Now if it was an understood thing that in each sign there was not to be more than a single dot, it is clear there could be but two signs; if two dots might be united in the

same sign, four more new signs would have to be added to the two above, giving in all therefore six different signs. Assuming that three dots, but no more, might be combined for one sign we should get eight in addition to the above, making therefore in all fourteen distinct signs. Supposing, in fine, that four dots can be united for one sign would give us sixteen more signs, making in all therefore thirty, a number quite enough for giving not only all the letters but the numerals as well. Two signs may however be dispensed with, if instead of a second sign a quick repetition of a single one is employed. Hence we see that one sign, a dot for instance, enables us to render writing with greater conciseness than by the use of the various signs we ordinarily use; and what *one* dot is as the simplest sign for writing, *one* sound is for speech. By repetition and by combination we may by habit form a language intelligible to the ear.

We are now therefore enabled to state the conditions which a telegraph of the simplest possible construction must fulfil. It need communicate but a *single sign* but must give that with the *utmost rapidity*. If it was besides to be got up in the most convenient method this sign should be made *audible*.

Let us now enquire in succession to what natural phenomena we may have recourse in order to make this single sign as we have described.

Light is only partially applicable to this purpose. Its transmission may, it is true, be considered as infinitely rapid, but we shall never be able to make it affect more than our sight. Moreover owing to the straight path it takes and the spherical shape of the earth, there are certain limits beyond which its use is not applicable. A telegraph whose signals are founded on the use of light can therefore only communicate with other stations when the attention of the observers at those stations is drawn to it, when the distance does not exceed a moderate number of miles, and when the weather is favourable. Notwithstanding these very confined limits imposed on its use the telegraph as constructed by Chappe has met with a favourable reception, and since 1793, when the first telegraphic line was established in France, been very generally adopted. It is remarkable that all the improvements proposed to be made in it should be but of minor importance. But although the principal defects, common to optical telegraphs, cannot of course be got over, yet it strikes me to be capable of being considerably improved. I shall here confine myself to the following.

The first thing must always be making the communications as rapidly as possible, and there are two methods of reducing

the time required for this. It can be brought about by stenographic contractions, in other words, by the introduction of *numerous* signals, but the employment of *a few* of which any idea may be rendered. The same can be also attained by diminishing the time required for giving the signal, and this appears the preferable method. All the motions of long levers, of which our telegraphs are composed, and of which in order to be seen at a distance they must always consist, require considerable time, in accordance with the laws of dynamics. Hence it would be well to retain the present mechanical arrangement of the telegraph no longer. The proposal of Gauss, to which he was led by his experience in the transmission of signals by means of the Heliotrope, appears to me to be capable of being employed in practice without difficulty.*

It is well known that a glass mirror of not above a few square inches in size appears to the naked eye like a star at the distance of five and twenty miles and upwards, when so directed as to show an observer part of the image of the sun. For the time there is no sunshine, during the night, or when the weather is cloudy for instance, recourse may be had to the glare produced by directing the flame of hydro-oxygen gas upon lime. The signals would consist of flashes produced by turning or covering the mirror. This arrangement, a more detailed account of which in this place would detain us too long, would present the advantage of giving the signs with great rapidity. It is easy to distinguish six separate flashes of light in a second, and which on their disappearance leave a corresponding impression on the memory, as is the case with tones in rapid succession. We could therefore give at least thirty signs by means of flashes, while one is now given by the telegraph. There would further be the additional advantage of dispensing with telescopes, and, what appears to be of still more importance, only the observers at the stations would notice anything of the signals. I do not however deny that these advantages are more than balanced by insurmountable defects.

If we wish to carry on telegraphic correspondence without the attention of those at the other stations being previously called, we are *compelled* to affect the sense of hearing, whose impressions are alone constant, and which, within certain limits, allows us liberty of motion and permits us to occupy

* For a detailed description of the construction and use of the Heliotrope of Gauss see "Breithaupts Magazin von den neuesten Mathematischen Instrumenten" 2tes. Heft. p. 47. Cassel 1835.

ourselves with other affairs. But in order to produce signs that may be audible without difficulty, some piece of mechanism must be put in motion at the other station and made to strike on a bell or do something of that kind.

One would say it must be by no means an easy task to transfer a power to a great distance and cause it to perform there, certain functions at our pleasure, and yet there are several possible methods of effecting this. Sound, radiant heat, electric and galvanic currents, may, when applied in certain ways, be employed for this purpose. The practical application however of each of these methods presents its own particular difficulties, and each carries with it its own inseparable defects, so that it appears advisable to examine them more closely in order to pronounce which of them presents the greatest advantages in its application.

We first come to the ordinary transmission of sound through the air, to the voice strengthened as it were by means of speaking trumpets. But this manner of giving signals can only be employed with effect when the distances are but trifling. The boatswain's whistle, the signal horn, and the alarm bell, are all similar methods, answering their particular purposes but inapplicable to telegraphic communication at considerable distances, inasmuch as any considerable increase of a sound would be too annoying to the immediate neighbourhood, but principally because the transmission of sound through the air, at the rate of about 1142 feet in a second, is not rapid enough. The case is different in the transmission of sound through water. Here the rapidity is nearly four times as great, and forms at least no longer an insuperable obstacle. The experiments which Beaudent instituted at Marseilles and the more recent investigations of Colladon and Sturm at the Lake of Geneva* put it beyond a doubt that one can transmit audible tones through water to a distance of many miles. The nature of the transmission of the tone is however of such a kind that one not only hears it but is also enabled to render it visible as a molecular motion by means of a particular apparatus, the lever of contact. Consequently in place of the troublesome method of hearing under water a plan may be contrived which by the trembling motion of the particles of water shall repeat that motion on a larger scale, thus placing the mechanical power we require for producing a sound directly within our reach. In this way of carrying on correspondence, and which we merely notice here

* Ann. de Chimie et Phys. XXXV. 113. Gilbert's Annalen, LXXXVIII. 39.

in passing, it appears not unimportant when compared with telegraphs founded on optical principles, that the communications may be made under all circumstances. Consequently should it be established that sounds are transmitted through the plane surfaces of the water we have all around us, of which there is hardly a doubt, and if the employment of this method might therefore be generally applicable, the subject will merit a more complete investigation, the more so from its not requiring any particular conductor for the transmission of the sound, and from the circumstance of no interruption of the signals being to be anticipated.

Another possible method of bringing about transient movements at great distances without any intervening artificial conductor is furnished by radiant heat when directed by means of condensing mirrors upon a thermo-electric pile. A galvanic current is called into play which in its turn is employed to produce declinations of a magnetic needle. The difficulties attending the construction of such an instrument though certainly considerable are not in themselves insuperable. Such a telegraph however would only have this advantage over those based on optical principles, namely, that it does not require the constant attention of the observer. But like the optical one it would cease to act during cloudy weather, and hence partakes of the intrinsic defects of that instrument; this method therefore is not probably able to stand a comparison with others.

The three principles of telegraphic intercourse here brought forward, namely, light, radiant heat, and the propagation of sound, have this in common, they do not require that there should be a direct connexion between the two stations. The air, water, and the ground, form the natural conductors of the conditions excited or rendered available, and which serve for making the communications. In this essential circumstance they differ advantageously from other feasible plans which we will now proceed to consider at some length. The velocity with which frictional electricity is transmitted along metallic conductors called forth as long ago as in the last century the idea of employing it for telegraphic communications. Winkler* at Leipsic in the year 1746 discharged several Leyden jars through a wire of considerable length, and on that occasion the river Pleiss formed a part of his circuit. Le Monnier in Paris† produced shocks through a length of wire amounting

* Priestley's History of Electricity, p. 59.
† Phil. Trans. Vol. XLIV. p. 1, 290.

to 12789 feet. Watson* extended the experiment over a space of four miles near Shooter's Hill, composing his circuit of two miles of wire and an equal distance of dry ground. Lomond† transmitted telegraphic signals to a neighbouring room by means of a pith ball electrometer acted upon by frictional electricity. Reiser‡ illuminated, by the electric spark, letters, formed upon plates of glass with strips of tin foil. Gauss§ makes mention of a communication from Humboldt according to which Bétancourt in 1798 established a communication between Madrid and Aranjuez, a distance of 26 miles by means of a wire through which a Leyden jar used to be discharged which was intended to be used as a telegraphic signal.

All these experiments put it beyond a doubt that frictional electricity may be employed for giving signals at any distances, and that when these signals are properly contrived they offer convenient means of telegraphic intercourse.

Frictional electricity has besides, as Gauss has already observed, the great advantage of not losing any of its force by increasing the length of the conducting wire, inasmuch as the whole of the electricity of one coating of the jar must traverse the entire length of the wire, be it what it may, to neutralize that of the other coating.

The experiments which Wheatstone instituted with a mirror in rapid motion to ascertain the rate at which the electric spark is transmitted through copper conductors, show that it travels with a velocity of 288,000 miles in a second,‖ a velocity exceeding that of the light of Jupiter's Satellites.¶ Using this as a standard, all distances upon our globe are done away with, and we accordingly see in electricity the instantaneous messenger of thought for all distances and in every circumstance. Nevertheless the practical execution of a telegraph founded on this principle presents some difficulty. Francis Ronalds constructed one at Hammersmith in 1816, and published a description of the instrument in 1823. In his arrangement there were clocks which kept time employed at the stations and which were furnished with a light disc of ciphers in place of hands, and having twenty different signs towards their circumference. At the moment the proper sign

* Phil. Trans. Vol. XLV. for 1748.
† Young's Travels in France, 1784, Vol. I. p. 79.
‡ Voigt's Magazin, Vol. IX. Part 1.
§ Gauss and Weber Resultate d. Mag. Veriens, Vol. II. p. 14.
‖ Phil. Trans. 1834, p. 595.
¶ 192,500 miles in a second, Brewster's Optics, p. 2.

passes before the index the spark is discharged with an electrometer upon which the same sign is rendered visible on the clock at the other station. The disadvantage of being obliged to wait every time between each sign one gives till the disc has completed an entire revolution of course renders the plan impracticable. The old proposal of Cavallo* to employ the passage of the spark for a signal, would, when properly modified, be more applicable. It would be necessary, so that the signals may succeed each other with the utmost rapidity, and the arrangements be as simple as possible, that we should content ourselves with the discharging spark of a small coated plate. The sound which is always heard on the passage of the spark where there is a break in the chain would serve as an unequivocal signal, directly affecting the sense of hearing as already laid down by us in our general remarks upon convenient telegraphic intercourse. An electrical machine of moderate dimensions would continually furnish fresh charges at short intervals. It would not however be so easy to get over the difficulties attendant on the changes in electric excitation and the various hygrometric states of the atmosphere. But these difficulties are not insurmountable, and it is as yet by no means certain but what this plan, if followed up by a thorough knowledge of the subject, might not from its simplicity be brought into competition with any other principle, and this the more if due use is made of the important principle discovered as we have said by Winkler.

Of late years however we have become acquainted with a peculiar modification of electricity, which, affecting as it does with a reciprocal action several of the other powers of nature in a wonderful manner, even at first sight presents essential advantages for its application to the problem of telegraphic intercourse by means of electricity. We allude to the power of galvanism.

As long ago as in 1807 Sömmering erected in the apartments of the Academy of Sciences at Munich a galvanic telegraph, of which he has published a detailed description in the Philosophical Transactions of Bavaria.† He employed the energy of a powerful voltaic pile to bring about the decomposition of water by means of thirty-five gold pins immersed in an oblong glass trough, each of these pins being marked with a letter or number, and admitting of connexion with the pile by an isolated wire. The ascension of the air bubbles of

* Cavallo's Treatise on Electricity.

† Münchner Denkschr. d. K. Akad. d. W. für 1809, 1810. Math. phys. Classe p. 401.

the water decomposed was to serve as the telegraphic signal. It should be borne in mind that our knowledge of the effects of the galvanic pile was at that period but very limited. The discoveries of Oerstedt in 1819 from which we learnt that a magnetized needle can be deflected by a galvanic current, have opened a fresh field for the application of this power to telegraphic intercourse. Under this head may be comprised the hints for a galvanic telegraph thrown out by Fechner in his Manual of Galvanism,* and Ampères scheme of an electro-magnetic telegraph which has been executed on a small scale by the late Professor Ritchie.† In this plan however Ampère departs so totally from the desirable principle of simplicity that upwards of sixty metallic connexions would be required for his telegraph. The arrangement which Davy‡ has proposed, in which illuminated letters are shown by the removal of screens placed in front of them, appears also to be far too complicated. The experiments instituted by Schilling§ by the deflection of a single magnetic needle seem much better contrived, he did not however succeed in surmounting the mechanical difficulties that attend the question in this shape. The subsequent discovery of Faraday, according to which the generation of galvanic currents is reduced to the mere motion of multipliers placed near fixed magnets has very materially simplified the problem, inasmuch as the voltaic pile becomes thereby no longer necessary.

To Gauss and Weber‖ is due the merit of having in 1833 actually constructed the first simplified galvano-magnetic telegraph. It was Gauss who first employed the excitement of induction, and who demonstrated that the appropriate combination of a limited number of signs is all that is required for the transmission of communications. Weber's discovery that a copper wire 7460 feet long which he had led across the houses and steeples at Gottingen from the observatory to the cabinet of Natural Philosophy required no especial insulation was one of great importance. The principle was thereby at once established of bringing the galvanic telegraph to the most convenient form. All that was required was an appropriate method of inducing or exciting the current with the

* Lehrbuch des Galvanismus 1829, p. 269.

† Froriep's Not. Vol. XXVII. No. 6. p. 86.

‡ Mechanics' Mag. No. 754, p. 261; No. 756, p. 296; No. 758, p. 327.

§ Allgemeine Bauzeitung 1837, No. 52. p. 240.

‖ Gött. gel. Anz. 1834, p. 1273, and Schumacher's Jahrbuch, 1837, p. 38.

power of changing its direction without having recourse to any special contrivances for that purpose. In accordance with the principles we have laid down, all that was required in addition to this was to render the signals audible, a task that apparently presented no very particular difficulty, inasmuch as in the very scheme itself a mechanical motion, namely, the deflection of a magnetic bar, was given. All that we had to do therefore was to contrive that this motion should be made available for striking bells or for making indelible dots. This falls within the province of mechanics, and there are therefore more ways than one of solving the problem. Hence the alterations that I have made in the telegraph of Gauss and by which it has assumed its present form may be said to be founded on my perception and improvement of its imperfections, in harmony with what I had previously laid down as necessary for perfect telegraphic communication. I by no means however look on the arrangement I have selected as complete; but as it answers the purpose I had in view, and it may be well to abide by it till some simpler arrangement is contrived.

As an inductor or exciter I employ a rotating apparatus whose construction, speaking in a general way, is similar to those of Clarke, of London, the multipliers of which however my inductor is composed, consist of a vast number of turns of fine insulated copper wire; and this arrangement is necessary in order that the resistance offered by the thicker wire completing the circuit, even should it be many miles long, may be but little increased. Of the galvanic influence excited during the entire half-turn of the rotating double multiplier only a small portion is employed, and that when it is at the maximum of its energy. By this means the duration of the current is but very short, an arrangement which therefore in a manner can cause merely a momentary deflection of the little magnetic bars employed for giving the signals. In order to heighten the action of these indicators as much as possible they are surrounded by powerful multipliers. Small detached magnets are so placed near these indicators that they are thereby brought back to their original position immediately that the induced current ceases, or in other words, as soon as the deflection has taken place: we thus are enabled to repeat signals in very rapid succession. The same indicator can be brought with ease to make five deflections in a second, succeeding each other as fast as the sounds of a repeater when striking. Hence if bells are placed at the proper striking distance from these indicators they will ring at every deflection produced, and as it is quite immaterial at what part of the

wire, completing the circuit, the multiplier containing the indicator is inserted, we have it in our power to produce the sign excited by induction at any part of the course the wire takes. Should it be desired that the indicator instead of producing sounds should write, it is merely required to adapt to one end of the little magnetic bar a small vessel filled with a black colour, and terminating in a capillary tube. This tube, instead of striking on a bell, thus makes a black spot upon some flat surface held in front of it. If these spots are to compose writing, the surface upon which they are printed must keep moving on in front of the indicator with a uniform velocity, and this is easily brought about by means of an endless strip of paper which is rolled off one cylinder on to another by clockwork. This is in a general way the construction followed in the telegraph erected here, a fuller account of which now would be out of place, as it may be found on referring to the appendix. As far as the employment of the telegraph is concerned, it may be fairly said to perform all that can be reasonably required of it. The excitation of the current is produced by half a turn of the inductor, and is equally available at all times. The sounds of the bells close to the person making the signals, and which being produced at the other station too are also audible there, become, by practice, intelligible as a language. Should they however be overheard or misunderstood, the communication presents itself simultaneously written down. This can be done with closed doors, without any but the parties concerned being aware of it: the communications may be made at any distances, and either by day or night without any appreciable loss of time. There is, therefore, every reason to be content with the performance of the instrument.

It is not however to be denied that the establishment of certain conditions indispensable to its action is nevertheless a matter of some difficulty. We allude to the connecting wire joining the stations.

It has been stated above that Ampère required more than sixty such wires, whereas thirty or so were sufficient for Sömmering. Wheatstone and Cooke* reduced their number to five; Gauss and, probably in imitation of him, Schilling, as likewise Morse† in New York, made use of but a single wire running to the distant station and back. One might imagine that this part of the arrangement could not be further sim-

* La France industrielle, 1838, April 5, p. 3.

† Mechanics' Magazine, No. 757, p. 332. Silliman's Journal for October, 1837. Annals of Electricity, &c., Vol. II. p. 116.

plified, such however is by no means the case. I have found that even the half of this length of wire may be dispensed with, and that with certain precautions its place is supplied by the ground itself. We know in theory that the conducting powers of the ground and of water are very small compared with that of the metals, especially copper. It seems however to have been previously overlooked that we have it within our reach to make a perfectly good conductor out of water or any other of the so called semi-conductors. All that is required is that the surface that its section presents should be as much greater than that of the metal as its conducting power is less. In that case the resistance offered by the semi-conductor will equal that of the perfect conductor; and as we can make conductors of the ground of any size we please simply by adapting to the ends of the wires plates presenting a sufficient surface of contact, it is evident that we can diminish the resistance offered by the ground or by water to any extent we like. We can indeed so reduce this resistance as to make it quite insensible when compared to that offered by the metallic circuit, so that not only is half the wire spared but even the resistance that such a circuit would present is diminished by one half. This fact, the importance of which in the erection of galvanic telegraphs speaks for itself, furnishes us with another additional feature in which galvanism resembles electricity. The experiments of Winkler, at Leipzig, had already shown us that with frictional electricity the ground may replace a portion of the discharging wire. The same is now known to hold good with respect to galvanic currents.

The enquiry into the laws of dispersion according to which the ground, whose mass is unlimited, is acted upon by the passage of the galvanic current, appeared to be a subject replete with interest. The galvanic excitation cannot be confined to the portions of earth situated between the two ends of the wire; on the contrary it cannot but extend itself indefinitely, and it became therefore now only dependant on the law that obtained the excitation of the ground and the distance of the exciting terminations of the wire whether it was necessary or not to have any metallic communication at all for carrying on telegraphic intercourse.

I can here only state in a general way that I have succeeded in deducing this law experimentally from the phenomena it presents: and that the result of the investigation is, that the excitation diminishes rapidly as the distance between the terminal wires increases.

An apparatus can, it is true, be constructed in which the inductor, having no metallic connexion whatever with the

multiplier, by nothing more than the excitation transmitted through the ground, shall produce galvanic currents in that multiplier sufficient to cause a visible deflection of the bar. This is a hitherto unobserved fact, and may be classed upon the most extraordinary phenomena that science has revealed to us. It only holds good, however, for small distances. It must be left to the future to decide whether we shall ever succeed in telegraphing at great distances without any metallic communication at all. My experiments prove that such a thing is possible up to distances of 50 feet. For distant stations we can only conceive it feasible by augmenting the power of the galvanic induction, or by appropriate multipliers constructed for the purpose or, in conclusion, by increasing the surface of contact presented by the ends of the multiplier. At all events the phenomenon merits our best attention, and its influence will not perhaps be altogether overlooked in the theoretic views we may form with regard to galvanism itself.

To sum up in a few words what are the results of what we have here brought forward respecting telegraphic communications, we see that, with the present arrangement of the apparatus, no principle can be brought into competition with the galvanic telegraph, but that the establishing the metallic connexion indispensable to its action, although now materially simplified, still presents great difficulties in practice. Indeed such a connexion is only practicable where it can be constantly watched, as, for instance, in the vicinity of railroads.

For very considerable distances without intermediate stations, galvanic or electric excitation must, on account of their rapidity, be always the best power to have recourse to. For lesser distances it yet remains open to enquiry whether, with proper modifications, some of the other methods we have pointed out would not be preferable, as they dispense with a metallic connexion.

(To be continued, with two large illustrative plates, in the next Number.)

LVI. *Summary of new researches on the liberation of heat through friction. By* M. Becquerel, *President of l'Academie des Sciences for the year* 1838.*

Bodies are considered as formed by the connexion of an infinity of molecules or atoms surrounded by heat which is opposed to their immediate contact abstraction made by

THE ANNALS
OF
ELECTRICITY, MAGNETISM,
AND CHEMISTRY;
AND
Guardian of Experimental Science.

APRIL, 1839.

LXXII. *Upon Telegraphic communication, especially by means of Galvanism. By* Dr. Steinheil, *Professor of Mathematics and Natural Philosophy, at the University of Munich, &c., &c., &c.*

(Continued from page 452.)

APPENDIX.

Description and Figures of the magneto-galvanic telegraph erected between Munich and Bogenhausen, in 1837.

The telegraph is composed of three principal parts. 1.—A metallic connexion between the stations. 2.—The apparatus for exciting the galvanic current. And 3.—The indicator.

1. *Connecting wire.*

This so called connecting wire may be looked on as the wire completing the circuit of a voltaic battery extended to a very great length. What applies to the one holds good of the other. With equal thicknesses of the same metal, the resistance offered to the passage of the galvanic current is proportional to the length of the wire. With equal lengths of the same metal, however, the resistance diminishes inversely with the section; but the conducting power of metals is very different. According to Fechner, copper conducts six times better than iron, and four times better than brass. The conducting power of lead is even lower, so that the only metals which can well vie with each other in their technical use are copper and iron. But now though iron is about six times as cheap as copper it will be requisite to give the iron wire six times the weight of a copper one to gain the same conducting power with equal lengths. We thus see that as far as the

expense is concerned it comes to the same thing whichever of these metals is chosen. The preference will, however, be given to copper, as this metal is less liable to oxidization from exposure to the atmosphere. This latter difficulty may nevertheless be surmounted by simple means, namely, by galvanising it. It would even appear that the simple transmission of the galvanic current when the telegraph is in use is sufficient to preserve the iron from rust; such at least is observed to be the case with the iron portion of the wire used for the telegraph here, and which has already been exposed in all weathers for nearly a twelvemonth.

If the galvanic current is to traverse the entire metallic circuit without any diminution of intensity, the wire during its whole course must not be allowed to come into contact with itself; neither should it be in frequent contact with semi-conductors, inasmuch as a portion of the power called into action takes its course by the shortest way in consequence thereof, whereby the remotest parts are deprived of a portion of the power.

Numerous trials to insulate wires and to conduct them below the surface of the ground have led me to the conviction that such attempts can never answer at great distances, inasmuch as our most perfect insulators are at best but very bad conductors. And since in a wire of very great length, the surface in contact with the so-called insulator is uncommonly large when compared with the section of the metallic conductor, there necessarily arises a gradual diminution of the force, inasmuch as the out and the home wire, although but slightly, yet *do* communicate in intermediate points. It would be wrong to think that this difficulty would be got over by placing the out and the home wire very far apart. The distance between them is, as we shall see in the sequel, almost a matter of indifference. And as we shall never succeed in laying down conductors that are sufficiently insulated beneath the surface of the ground which is always damp, there is but one other course open to us, namely, leading the wire through the air. Upon this plan, it is true, the conductor must be supported from time to time; it is liable to be injured by the evil disposed, and is apt to suffer from violent storms or from ice which forms upon it. As we however have no other method that we can avail ourselves of we must endeavour by suitable arrangements to get the better of these, not immaterial, faults in the best way we can.

The conducting chain of the telegraph erected here, consists of three parts: one leads from the Royal Academy to the Royal Observatory, at Bogenhausen, and back, and the total

length of its wire is 32506 feet. The weight of the copper wire employed amounts to 260 pounds. Both wires (there and back) are stretched across the steeples of the town at a distance of four feet one inch. The greatest distance from support to support is 1279 feet: this is undoubtedly far too great for a single wire, inasmuch as the ice that forms upon it materially increases the weight of the wire itself, and considerably augments its diameter, so that it thus becomes liable to be torn asunder by high winds. Over those places where there are no high buildings, the connecting wire is supported upon tall poles forty or fifty feet long, which are let five feet into the ground, and to the top of which the wire is fastened to a cross bar. At the point where the metal rests there is simply a piece of felt laid, and the wire is made fast by twisting it round the wooden bar. The distance from pole to pole ranges between 640 and 850 feet, but this is far too great, for experience has shown that the wires become considerably stretched by high winds and other causes, and have, in consequence, had to be taken up more than once.*

The conducting wire thus mounted is by no means completely insulated. When, for example, the circuit is broken at Bogenhausen, an induction-shock given in Munich ought to produce no galvanic excitation whatever in the parts of the chain then disconnected. Gauss's galvanometer, however, even then gives indication of a weak current: measurements indeed go to show that this current goes on increasing as the point at which the interruption of the stream is made recedes from the inductor. The absolute amount of this current is not constant. Generally it is strongest when the weather is damp. When there are heavy showers of rain, it may be fairly said to be five times as strong as when the weather is settled dry. At moderate distances of a few miles this small loss of power is of almost no importance, and that the more as the construction of the inductor places currents of almost any strength we choose at our command. When the distance however amounted to upwards of 200 miles, the greatest part of the effect would be dissipated. In such cases much greater precaution must be taken with regard to the points of support of the metallic circuit.

* All these evils would be got over by making the connexion by at least a triple strand of metal, and not by a single wire, supporting it at intervals of 300 feet, and giving it a tension not exceeding one-third of what it will bear without giving way. This, however, in the experimental telegraph erected here, was not practicable, for reasons into which we cannot enter.

When thunder storms occur, atmospheric electricity collects on this semi-insulated chain as upon a conductor, but the passage of the galvanic current is not at all affected thereby.* Quite recently I made the discovery that the ground may be employed as one half of the connecting chain. As in the case of frictional electricity, water or the ground may with the galvanic current form a portion of the connecting wire. Owing to the low conducting power of these bodies compared with metals it is necessary that at the two places where the metal conductor is in connexion with the semi-conductor, the former should present very large surfaces of contact. Taking water, for instance, to conduct two million times worse than copper, a surface of water proportional to this must be brought in contact with the copper to enable the galvanic current to meet with equal resistance, in equal distances of water and of metal. For instance, if the section of a copper wire is 0.5 of a square line it will require a copper plate of sixty-one square feet surface in order to conduct the galvanic current through the ground, as the wire in question would conduct it. But as the thickness of the metal is quite immaterial in this case, it will be always within our reach to get the requisite surfaces of contact at no great expense. Not only do we by this means save half the conducting wire, but we can even reduce the resistance of the ground below what that of the wire would be, as have been fully established by experiments made here with the experimental telegraph.

A second portion of the conducting chain leads from the Royal Academy to my house and observatory in the Lerchenstrasse. This conductor is of iron wire, its length, there

* An occurrence may be mentioned here as a warning for the future. During a severe thunder storm on the 7th July, 1838, a very strong electric spark darted at the same instant through the entire conducting chain, and there was simultaneously produced at the indicator, that is fitted up in my room, a sound like the cracking of a whip. At the same time the lower toned bell of the indicator emitted a sound owing to the deflection of the needle, and the blow was so hard that the points on which the magnetic bar plays were injured. The same phenomenon was observed also at one of the other stations. As the deflecting power of frictional electricity is very inconsiderable with respect to magnets, the above occurrence indicates the presence of a vast quantity of electricity. It can only have arisen from the electricity of the earth having at that moment made its way to that collected in the wire. Whether this was brought about through the lightning conductors in the neighbourhood, or the imperfect insulation of the points of support, cannot be well made out.

and back, is 5745 feet, and it is stretched over steeples and other high buildings, as has already been described. Lastly, a third portion of the chain running through the interior of the buildings connected with the Royal Academy, leads to the mechanical workshop attached to the cabinet of Natural Philosophy. It is composed of a fine copper wire 958 feet long, let into the joinings of the floor, and in part imbedded in the walls. These three portions together compose a line, returning into itself and into which the apparatus for generating the galvanic current, and also the indicator, are inserted.

2. *Apparatus for generating the galvanic current.*

Hydro-galvanism or the galvanic current generated by the action of the voltaic pile is by no means fitted for traversing *very long* connecting wires, because the resistance in the pile, even when many hundred pairs of plates are employed, would be always inconsiderable compared with the resistance offered by the wire itself.

The principal disadvantage however, attendant on the use of the pile or trough apparatus, is the fluctuations of their current joined to the circumstance of their becoming very soon quite powerless, and requiring to be taken to pieces and put together again. The extremely ingenious arrangement of Morse is likewise subject to this inconvenience. All this however is got over when one, to generate the current, has recourse to Faraday's important discovery of induction, that is to say, by moving magnets placed in the neighbourhood of conducting wires. The better way however is, not to move the magnets as Pixii does in his electro-magnetic apparatus, but rather to give motion to the multipliers placed close to a fixed magnet. The arrangement that Clarke has given to the multiplier is the one which, with some modifications, has been adopted. Assuming on the part of our readers a general knowledge of the principles of the apparatus, we here confine ourselves to explaining how it has been adapted to purposes of telegraphic intercourse.

The magnet is composed of 17 horse-shoe bars of hardened steel. With its iron armature its weight is about 74 lbs., and it is capable of supporting about 370 lbs. Between the arms of the magnet there is fastened a piece of metal, supporting in its centre a cup provided with adjusting screws, and which serves as a support for the axis of the coils of the multiplier. The coils of the multiplier have in all 15000 turns of wire. A metre (3 feet 3.3708 inches English) of this wire weighs $15\frac{1}{2}$ grains, and it is twice bespun with silk. Its two ends, which are insulated, are passed up through the interior of the

vertical axis of the multiplier, and then terminate in two hook-shaped pieces, as may be seen in Plate XV, figs. 8 and 9. In order to secure perfect insulation, the vertical axis fig. 8, was bored out hollow. Into this hole there are let in from above two semicircular rods of copper which are prevented touching by a strip of taffeta fastened between them with glue; and these again are kept from touching the metallic axis by winding taffeta round them. In each of these little strips of metal there is, above and below, a female screw cut. In the lower holes small metal pins are screwed in, to which the ends of the multiplier are soldered securely on. While in the upper holes, as may be seen distinctly in figs. 9 and 10, there are iron hooks screwed in. These hooks therefore form the terminations of the multiplier wires of the coils of the inductor. They here turn down, fig. 15, into two semicircular cups of quicksilver that are separated by a wooden partition. From these cups of quicksilver there proceed connexions, J, J, figs. 8 and 13, towards the wires, and they therefore may be considered as forming a part of the chain. The quicksilver owing to its capillarity, stands at a higher level in these semicircular cups than are the partitions, so that the terminal hooks of the wires of the multiplier pass over these partitions without touching them when the multiplier is made to turn on its axis. One sees that the hooks thus are brought into other cups of quicksilver at every half-turn of the multiplier, in consequence of which the galvanic current preserves its sign as long as the multiplier is turned in one direction, but it changes its sign on the motion being reversed. This commutation, which it may be remarked may be established without the use of mercury by the contact of strips of copper that act like springs, is found to answer completely. There are besides two other arrangements which we must not allow to pass unnoticed.

The galvanic current, as we shall see in the sequel when treating of the indicator, should only be permitted to be in action during as short a period as possible, but during that interval should have the greatest intensity we can command. The terminal hooks of the wires dip into the quicksilver only at the place where it forms pools that advance towards each other at the centre, and where the current is at its greatest intensity, see figs. 13, 14, and 15. Fig. 15, shows the position that the inductor has when the terminal hooks first dip into the cups. In all other positions of the inductor it should however form no part of the chain, otherwise the signals made at the other stations will be repeated by its own multiplying wire; and this becomes of the more moment the greater the

resistance in the inductor is. In order therefore to cut off the inductor when in any other position than shown at fig. 15, there is a wooden ring adapted to the axis of rotation of the inductor, see figs. 11 and 12. This ring is encircled with a copper hoop, and into this latter two iron hooks are screwed. These hooks dip down into the semicircular cups of quicksilver as shown at fig. 14. At the moment however that they are passing across the wooden partition, the hooks of the inductor, which are at right angles to them, dip into the cups. When the hooks of the multiplier are in contact with the quicksilver the connexion with the hooks for diverting the current is broken. In every other position the connexion through the hooks of the multiplier is interrupted, while it is established through the others; whence it naturally follows that the current on being transmitted from any other station passes directly through the latter hooks, or, in other words, crosses directly from one quicksilver cup to the other and is not forced to traverse the wire of the inductor for that purpose. In order to put the inductor in motion without trouble, there is a fly bar terminating in two metal balls fastened horizontally on to its vertical axis, Plate XIV, figs. 1 and 2. To prevent the quicksilver being scattered about, owing to the motion of the hooks as they dip into it when the multiplier is turning rapidly, a glass cylinder is fitted on to this part of the apparatus, fig. 1. At every half turn is seen the passage of the spark as the hooks of the multiplier leave their cups of quicksilver.

If we choose to give up the phenomena of these sparks, a thing noways necessary to the employment of the instrument as a telegraph, the inductor will admit of a far more simple construction. It will then merely be necessary to place the commutator directly above the anker, and to let the axis of rotation pass farther up in the neck, in the direction of the fly bar. It then becomes unnecessary to bore the axis out, but the ends of the multiplier are at once fastened by twisting on to two plates of copper, and these copper plates are let into a wooden ring directly opposite each other. The wooden ring is placed upon the vertical axis and made fast to it by clamps. Externally this ring is, in addition to the above-mentioned plates, provided with an arc of copper let into it which acts as a contact-breaker, and two ends of the chain that the current has to traverse have the form of permanent springs that keep pressing against the wooden rings directly opposite each other. By this means with this arrangement also the ends of the inductor are in metallic communication with the chain only during a small portion of each revolution, while during the rest of the time the connecting arc brings the ends of the

chain into direct contact. This construction, in which quicksilver is entirely dispensed with, is, on account of its greater simplicity and durability, preferable to the arrangement first described. The apparatus of the stations at Bogenhausen and in the Lerchenstrasse are thus constructed.

3. *The Indicator.*

We have shown in the preceding paper that our aim is so to employ the current developed by the inductor and led through the conducting chain, that when passed across magnetic bars that are delicately suspended it may cause them to be deflected as was discovered by Oersted. These deflections, if we wish to give the signals in quick succession, must follow each other with the greatest rapidity, and should therefore be powerful. This points out to us the size we should give the magnetic bars we wish to deflect. They must not however be made too small, as in that case the mechanical force arising from their deflection is not strong enough to be directly applied to striking upon bells or any other similar purpose. The deflections are, as is well known, taking the force of the current to be the same, the stronger, the greater the number of turns in the multiplier, or in other words, the oftener the wire is led along the magnetic bar. The size of the diameter of the separate turns, as we know, only exerts an influence inasmuch as it adds to the entire length of the connecting wire. The indicator therefore is a multiplier, whose two ends connect it with the conducting chain, and within which the bar to be deflected is placed. It must be borne in mind that the thinner the wire of the multiplier is, the larger its coils are; and the more turns they make, the greater is the resistance to the current throughout the entire chain.

Figs. 16 and 17, Plate XV, represent the vertical and horizontal sections of an indicator containing two magnets, moveable on their vertical axis, and which from their construction are applicable both to striking bells and also to noting down a type composed of dots. Into the frames of the multiplier, which are made of soldered sheet brass, fig. 16, there are soldered two smaller cases for the reception of the magnets, and which allow of the free motion of their axes. Above and below they have threads cut in them for the reception of four screws in holes, on the ends of which the pivots of the axes turn. By means of these screws the position of the bars may be so regulated that their motion is perfectly easy and free. In the frames of the multiplier there are 600 turns of the same insulated copper wire as was employed for the inductor. The commencement and the end of this wire are

shown at M M, fig. 16. The magnetic bars are, as the figure shows, so situated in the frame of the multiplier that the north pole of the one is presented to the south pole of the other. To the ends which are thus presented to each other, but which owing to the influence they mutually exert cannot well be brought nearer, there are screwed on two slight brass arms supporting little cups, figs. 17 and 18. These little cups, which are meant to be filled with printing ink, are provided with extremely fine perforated beaks that are rounded off in front. When printing ink is put into these cups it insinuates itself into the tube of these beaks owing to capillary attraction; and without running out forms at their apertures a projection of a semi-globular shape. The slightest contact suffices therefore for noting down a black dot. When the galvanic influence is transmitted through the multiplying wire of this indicator both magnetic bars make an effort to turn in a similar direction upon their vertical axes. One of the cups of ink would therefore advance from within the frame of the multiplier while the other would retire within it. To prevent this, two plates are fastened at the opposite ends of the free space that is allowed for the play of the bars, and against which the other ends of these bars press. Only the end of one bar can therefore start out from within the multiplier at a time, the other being retained in its place. In order to bring the magnetic bars back to their original position as soon as the deflection is completed, recourse is had to small moveable magnets, whose distance and position is to be varied till they produce the desired effect. This position must be determined by experiment, inasmuch as it depends upon the intensity of the current called into play.

If this apparatus be employed for producing two sounds easily distinguishable to the ear by striking on bells, it will be right to select clock bells or bells of glass, both of which easily emit a sound, and whose notes differ about a sixth. This interval is by no means a matter of indifference. The sixth is more easily distinguished than any other interval; fifths and octaves would be frequently confounded by those not versed in such matters. The bells are to be supported on little pillars with feet, and their position with respect to the bars and likewise their distance from them is to be determined by experiment. The knobs let into the bar that strike on the bells must give the blow at the place which most easily emits a sound. These hammers however are not to be too close to the bells, as in that case a repetition of the signal can easily ensue. A few trials will soon get over this difficulty. If the indicator is to write down the signals a flat surface of

paper must be kept moving with a uniform velocity in front of the little beaks above mentioned. The best way of doing this is to employ very long strips of the so-called endless paper which is to be wound round a cylinder of wood and then cut upon the lathe into bands of the suitable width. One of these strips of paper must be made to unwind itself from a cylinder, pass close in front of the cups, run along a certain distance in a horizontal position, so that the dots noted down may be read off, and lastly wind itself up again on to a second cylinder. This second cylinder is put in motion by clock work, the regularity of whose action is insured by a centrifugal fly wheel. A longitudinal section of the entire arrangement is shown at fig. 1, Plate XIV. Fig. 2 represents it as seen from above. At the corners of the frame over which the ribbon of paper is led, there are placed two moveable rollers to diminish the friction. This frame moreover admits of being advanced towards the cups or withdrawn from them, so that the most proper position to give it can be ascertained by experiment. It is evident that the same magnetic bars cannot be at once employed for striking bells and for writing, the little power they exert being already exhausted by either of these operations. But to combine them both, all we have to do is to introduce a second indicator into the chain. By thus increasing the number of the indicators the loudness of the sounds of the bells can be augmented at pleasure; this can however only be done at the cost of an increased resistance in the chain. In order that this may be increased by the indicator as little as possible it would in future be better that its coils should be made of very thick copper wire or of strips of copper plate.

The above description will enable those who are familiar with such subjects to construct the apparatus for themselves. We have yet to add a few words upon

The way of putting the Apparatus together.

Plate XIV, fig. 1, represents the longitudinal section of a pyramidal table standing on the floor of the room and containing the whole apparatus. Fig. 2 shows the same as seen from above. The wires from Bogenhausen, those from the Lerchenstrasse, the ends of the indicator, and the wires from the quicksilver cups of the inductor, or in other words, the two ends of its multiplier, all meet together at the centre of the table as seen at fig. 2, of Plate XIV. They are here brought into connexion with eight holes filled with quicksilver, made in a disc of wood as shown at fig. 3, Plate XV. The course that the current we call forth will take depends upon the respective connexion of these eight holes with each other.

For instance, supposing them to be connected together by four pieces of bent copper wire, as shown at fig. 3, the current would pass through the whole apparatus, and also the entire chain. Establishing however the connexion as shown at fig. 6, would cut off the Bogenhausen station, and would at once transmit the current direct from the inductor through the multiplier of the indicator and through the Lerchenstrasse station. Supposing this figure turned round 180 degrees we should have the Lerchenstrasse station cut off, and the current would pass through Bogenhausen. A third system of connexions is shown by the copper wires represented in fig. 7. In this position of the sketch the inductor and the multiplier would be in direct communication while the two stations at Bogenhausen and in the Lerchenstrasse would be cut off. But by turning this figure 90 degrees we should connect these two stations while we broke off the station in the Academy. Copper wires serving to establish these three systems of connexion and the combinations are laid down upon the under surface of the wooden cover of the commutator, as seen at fig. 4. There are 24 wires projecting downwards from this lid. Only eight of them, however, ever come into use at once, so that there must be sixteen other holes made in the lower disc of wood for the reception of the wires not in use, and having no quicksilver poured into them. It is thus in our power to direct the course of the current as we choose, and the systems concerned are indicated upon the upper surface of the cover of the commutator by engraved letters, see fig. 2, Plate XV, this cover containing the different modifications of the systems of connexion, as shown at fig. 4. Changing the position of this cover round the central pin springing from the table enables us to vary the direction of the current in any manner we like. The use of quicksilver cups in the commutator may of course be replaced by conically turned copper pins. This has indeed been done at the Lerchenstrasse and the Bogenhausen stations.

We shall conclude by a few remarks upon

The application of this apparatus to Telegraphic communication.

We know from what has preceded that at every half turn of the fly-bar from right to left one of the bars is deflected. I have so connected the terminations of the wires that every time this movement is repeated the high toned bell should be struck at all the stations. Standing at the side B B, and turned towards the indicator, one immediately perceives the beak imprint a dot upon the ribbon of paper as it moves along.

The intervals of time between the successive repetitions of this sign are represented by the respective distances between the dots that follow in a line upon the paper. On turning the fly-bar from left to right towards the operator, the deep toned bells ring and the second ink cup marks down a dot upon the paper as before, not, however, upon the same line with the former dots, but on a lower one. *High* tones are therefore represented by the *upper* dots, and *low* tones by the dots of the *lower* line, as in writing music. As long as the intervals between the separate signs remain equal they are to be taken together as a connected group, whether they be pauses between the tones, or intervals between the dots marked down. A longer pause separates these groups distinctly from each other. We are thus enabled, by appropriately selected groups thus combined, to form systems representing the letters of the alphabet or stenographic characters, and thereby to repeat and render permanent at all parts of the chain, where an apparatus like that above described is inserted, any information that we transmit. The alphabet I have chosen represents the letters that occur the oftenest in German by the simplest signs. By the similarity of shape between these signs and that of the Roman letters, they become impressed upon the memory without difficulty. The distribution of the letters and numbers into groups consisting of not more than four dots is shown at Plate XIV, fig. 1.

JULIAN GUGGSWORTH.

Wormwood Scrubbs,
Nov. 24. 1838.

LXXIII. *The variation of the Compass occasioned by a non-coincidence between the pole of the earth and the pole of the ecliptic, communicated to the Editor of the Annals of Electricity. By* Edward Nayler, Esq., *First Lieutenant of the Royal Marines.*

There are two modes by which a question in natural philosophy may be investigated; one derived from the consideration of some subject setting forth similar phenomena to those which we desire to investigate; and another proceeding directly to the analysis of the phenomena, as found to exist in the subject itself; which mode of enquiry, wherever it be practicable, appears the most direct and least liable to error. There are some instances in which this direct method cannot be pursued. Newton has explained the motions of the planets by investigating the laws of gravity, as found to exist in

PLATE XIV.

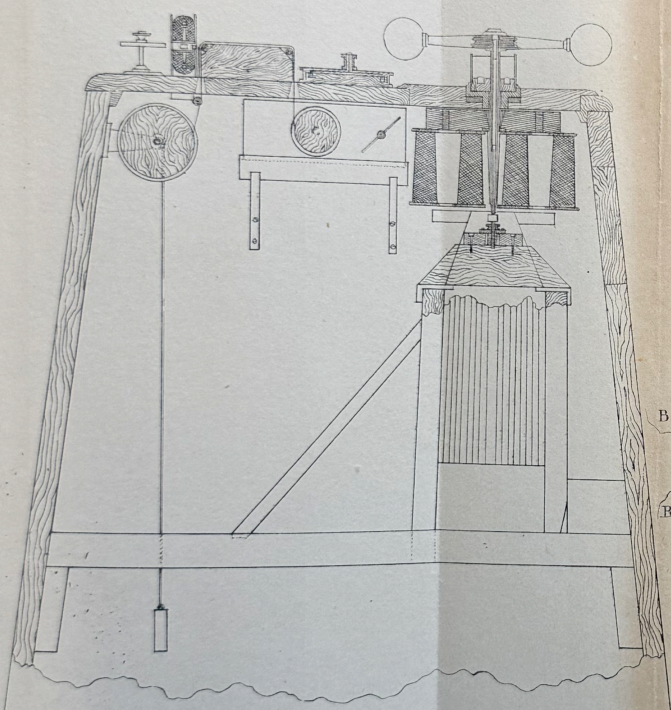

A B D E F G H CH SCH I K L M N O P R S T V W Z 0 1 2 3 4 5 6 7 8 9

Fig. 1.

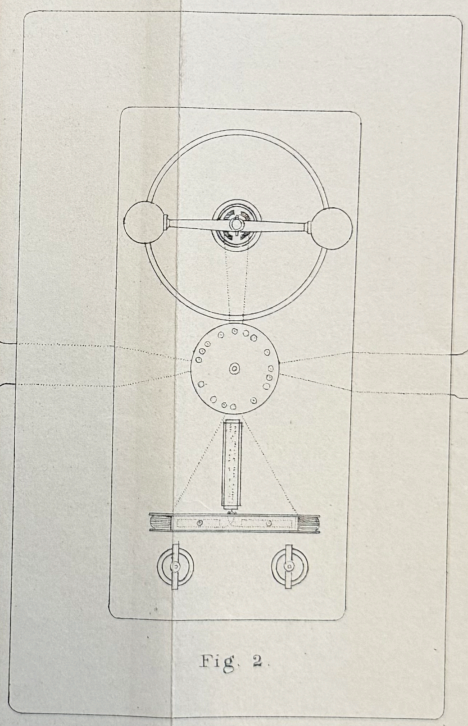

Fig. 2.



STEINHEIL'S GALVANIC TELEGRAPH.

PLATE XIV.

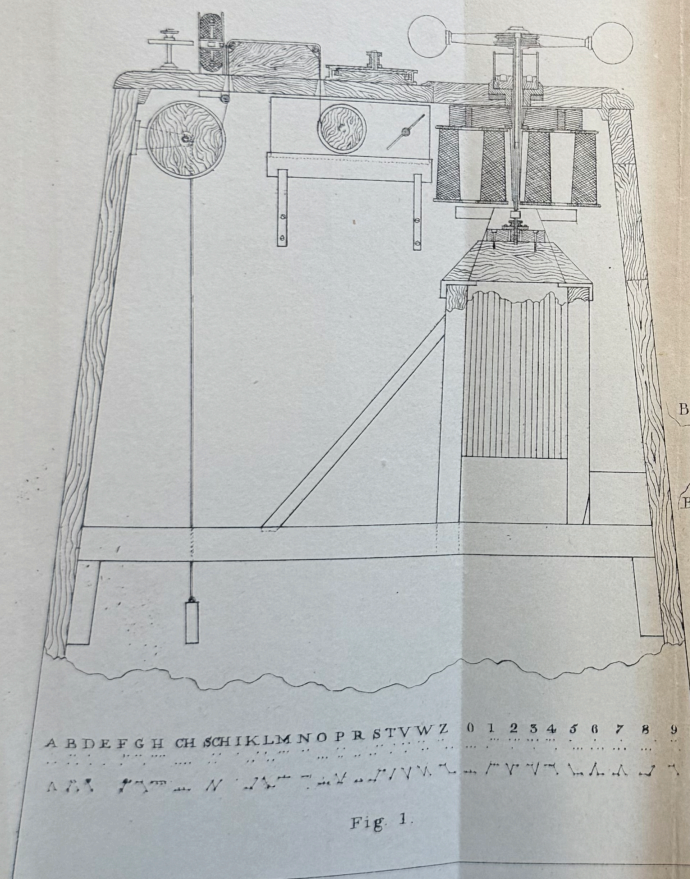

A B D E F G H CH SCH I K L M N O P R S T V W Z 0 1 2 3 4 5 6 7 8 9

Fig. 1.

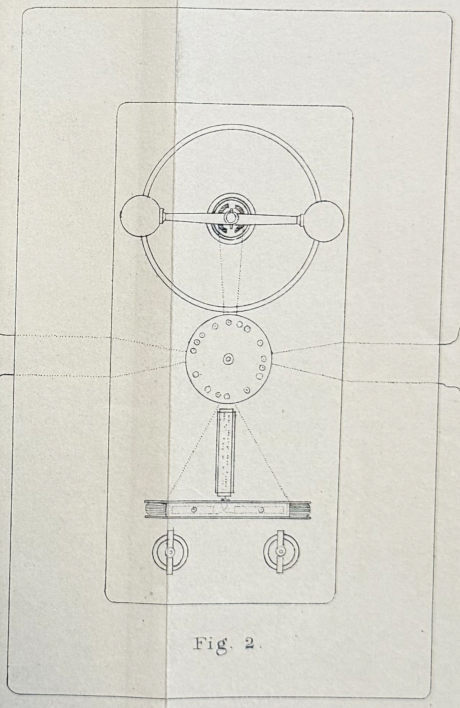

Fig. 2.

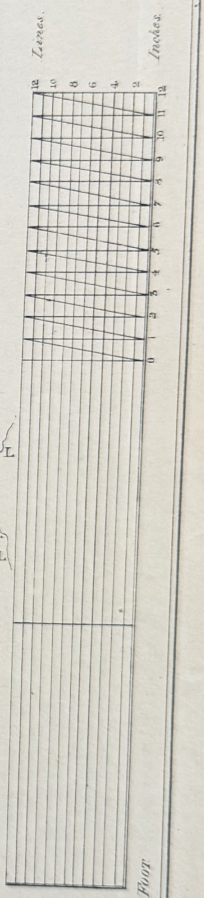

STEINHEIL'S GALVANIC TELEGRAPH.

FREEMAN FECIT

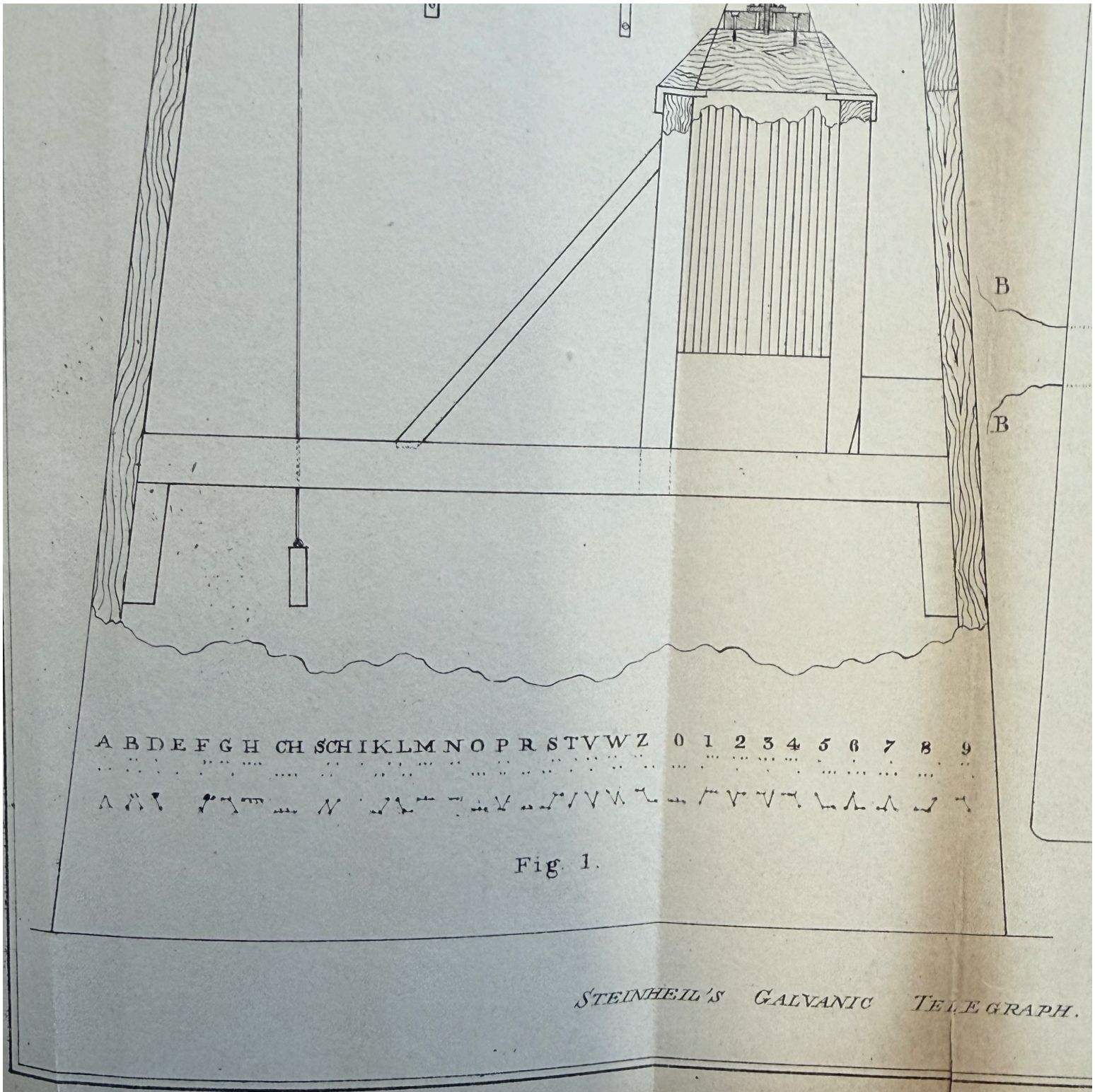

Fig. 1.

STEINHEIL'S GALVANIC TELEGRAPH.